SECTION D: EROSION AND SEDIMENT CONTROL PLANS

STATE OF SOUTH DAKOTA	PROJECT	SHEET	TOTAL SHEETS
	NH 0018(261)263	D1	D12

Plotting Date: 09/09/2026

INDEX OF SHEETS

D1	General Layout with Index
D2-D3	Estimate with General Notes and Tables
D4-D7	Stormwater Pollution Prevention Plan Checklist
D8	Dewatering and Sediment Collection System Details
D9	SDDOT Construction Entrance Details
D10-D12	Standard Plates

BEGIN NH 0018(261)263
Station 10+00.00
Located at southwest corner of Section 34 - Township 97 North - Range 75 West of the 5th PM
MRM 263.34+0.550

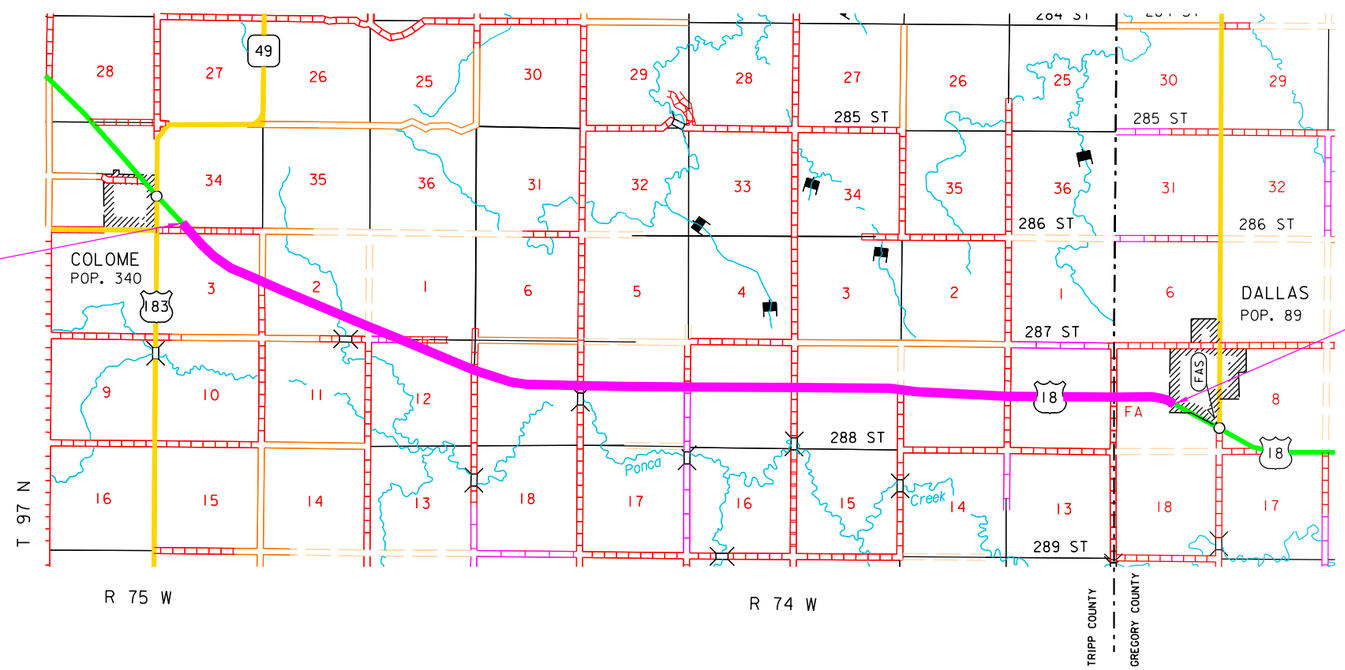

END NH 0018(261)263
Station 524+39
Located at northeast corner of Section 7 - Township 97 North - Range 74 West of the 5th PM
MRM 273.64+0.007

SECTION D ESTIMATE OF QUANTITIES

BID ITEM NUMBER	ITEM	QUANTITY	UNIT
110E1690	Remove Sediment	1.4	CuYd
230E0100	Remove and Replace Topsoil	Lump Sum	LS
730E0100	Cover Crop Seeding	25.0	Bu
730E0210	Type F Permanent Seed Mixture	640	Lb
731E0200	Fertilizing	12.30	Ton
732E0100	Mulching	49.2	Ton
734E0044	Soil Stabilizer	25.0	Acre
734E0154	12" Diameter Erosion Control Wattle	600	Ft
734E0165	Remove and Reset Erosion Control Wattle	150	Ft
734E0602	Low Flow Silt Fence	500	Ft
734E0604	High Flow Silt Fence	200	Ft
734E0610	Mucking Silt Fence	49	CuYd
734E0620	Repair Silt Fence	175	Ft
900E1320	Construction Entrance	1	Each

REMOVE AND REPLACE TOPSOIL

The 600' Nonreinforced PCC Pavement tie-in sections at the beginning and ending of the project will have a 6" depth of topsoil bladed down the respective inslope and left in a windrow 10' +/- from the subgrade shoulder.

The PCC Overlay Pavement section will have topsoil bladed down the respective inslope and left in a windrow 10' +/- from the subgrade shoulder. Following completion of resurfacing operations, topsoil will be bladed back up the inslope to the point indicated on the typical section.

The estimated amount of topsoil to be removed and replaced is 13,156 CuYd.

All costs associated with removing and replacing the topsoil along areas to be resurfaced will be incidental to the contract lump sum price for "Remove and Replace Topsoil".

MYCORRHIZAL INOCULUM

Mycorrhizal inoculum will consist of mycorrhizal fungi spores and mycorrhizal fungi-infected root fragments in a solid carrier. The carrier may include organic materials, calcinated clay, or other materials consistent with application and good plant growth. The supplier will provide certification of the fungal species claimed and the live propagule count. The inoculum will include a minimum 25% the fungal species *Rhizophagus intraradices*. The remaining 75% may include other endomycorrhizal fungal species.

All seed will be inoculated by the seed supplier with a minimum of 100,000 live propagules of mycorrhizal fungi per acre. All costs of inoculating the seed will be incidental to the contract unit price per pound for the corresponding permanent seed mixture.

The Mycorrhizal Inoculum provided will be from the approved product list. The approved product list may be viewed at the following internet site:

https://apps.sd.gov/HC60ApprovedProducts/main.aspx

COVER CROP SEEDING

Cover crop seeding may be used on this project as a temporary erosion control measure. The actual limits and use of cover crop seeding will be determined by the Engineer during construction.

FERTILIZING

The Contractor will apply an all-natural slow release fertilizer prior to seeding or placing sod. The all-natural fertilizer will have a minimum guaranteed analysis of 4-4-4 and be USDA Certified BioBased. It should provide a minimum of 4% (N) nitrogen with a minimum water insoluble nitrogen (WIN) fraction of 2.07%, a minimum of 4% (P2O5) available phosphate, a minimum of 4% (K2O) soluble potash, and a maximum carbon to nitrogen ratio (C:N ratio) of 5:1. The all-natural fertilizer will be free of weed-seed and pathogens accomplished through thermophilic composting, and not mechanical or chemical sterilization, to assure presence of beneficial soil microbiology. The fertilizer will have a near neutral pH, a low salt index, a low biological oxygen demand, contain organic humic and fulvic acids, and have high aerobic organism counts. The fertilizer will also be stable, free of bad odors, and be unattractive as a food source for animals. It should also be in a granular form that is easily spread.

The fertilizer will be applied at a rate of 1,000 pounds per acre in accordance with the manufacturer's recommended method of application.

The Fertilizer provided will be from the approved product list. The approved product list may be viewed at the following internet site:

https://apps.sd.gov/HC60ApprovedProducts/main.aspx

PERMANENT SEEDING

The areas to be seeded consist of all newly graded areas within the project limits except for the top of roadways and temporary easements under cultivation.

Type F Permanent Seed Mixture will consist of the following:

Grass Species	Variety	Pure Live Seed (PLS) (Pounds/Acre)
Western Wheatgrass	Arriba, Flintlock, Rodan, Rosana, Walsh	7
Green Needlegrass	Lodorm, AC Mallard Ecovar	4
Sideoats Grama	Butte, Pierre	3
Blue Grama	Bad River	2
Oats or Spring Wheat: April through May; Winter Wheat: August through November		10
	Total:	26

MULCHING (GRASS HAY OR STRAW)

If the Contractor uses a no-till drill, mulch may be applied prior to seeding and the mulch can then be punched into the soil by the no-till drill. If the Contractor uses this process, the no-till drill seeding will be completed immediately following the mulch application and the mulch will be punched into the soil at a 3-inch depth.

SOIL STABILIZER

An estimated quantity of 25 acres of soil stabilizer has been included in the Estimate of Quantities. The soil stabilizer will be applied on permanently seeded areas and areas deemed necessary by the Engineer.

The Contractor will apply soil stabilizer in accordance with the manufacturer's application instructions and at the rate specified in the list of approved soil stabilizers.

Wood fiber mulch that contains a green dye will be mixed with the soil stabilizer to be used as a tracer when the soil stabilizer is applied hydraulically. Wood fiber mulch will be added at a rate of 300 pounds per acre to all of the approved soil stabilizers listed in the table except for the Pam-12 Plus product. The wood fiber mulch will be a 100% wood fiber product and does not need to contain a tackifier.

All costs for furnishing and applying the soil stabilizer including wood fiber mulch, hauling, materials, equipment, labor, and incidentals necessary will be paid for at the contract unit price per Acre for "Soil Stabilizer".

The Soil Stabilizer provided will be from the approved product list. The approved product list may be viewed at the following internet site:

https://apps.sd.gov/HC60ApprovedProducts/main.aspx

EROSION CONTROL WATTLE

Erosion control wattles for restraining the flow of runoff and sediment will be installed at locations determined by the Engineer during construction. Refer to Standard Plate 734.06 for details.

The Contractor will provide certification that the erosion control wattles do not contain noxious weed seeds.

Erosion control wattles will remain on the project to decompose.

An additional quantity of 12" Diameter Erosion Control Wattles has been added to the Estimate of Quantities for temporary erosion and sediment control in highway ditch channels and as an alternative to low flow or high flow silt fence at wetland areas adjacent to the highway.

The erosion control wattle provided will be from the approved product list. The approved product list for erosion control wattle may be viewed at the following internet site:

https://apps.sd.gov/HC60ApprovedProducts/main.aspx

Plot Scale - 1:200
Plotted From - TRPR17200
File - ...\pn\Trfp08G7\NotesSectionD.dgn

LOW FLOW SILT FENCE

The low flow silt fence fabric provided will be from the approved product list. The approved product list for low flow silt fence may be viewed at the following internet site:

https://apps.sd.gov/HC60ApprovedProducts/main.aspx

Low flow silt fence will be placed at locations that will minimize siltation of adjacent streams, lakes, dams, or drainage areas as determined by the Engineer during construction. Refer to Standard Plate 734.04 for details.

An additional quantity of Low Flow Silt Fence has been added to the Estimate of Quantities for temporary sediment control.

HIGH FLOW SILT FENCE

The high flow silt fence fabric provided will be from the approved product list. The approved product list for high flow silt fence may be viewed at the following internet site:

https://apps.sd.gov/HC60ApprovedProducts/main.aspx

High flow silt fence will be placed at locations that will minimize siltation of adjacent streams, lakes, dams, or drainage areas as determined by the Engineer during construction. Refer to Standard Plate 734.05 for details.

An additional quantity of high flow silt fence has been added to the Estimate of Quantities for temporary sediment control.

DEWATERING AND SEDIMENT COLLECTING

The Contractor has the option to treat sediment laden water trapped within the project limits or the Contractor may elect to transport sediment laden water off the project. Refer to the OPTIONS FOR DEWATERING AND SEDIMENT COLLECTING detail sheet for more information.

Water transported off the project limits will not be disposed of in an area where it can enter a waterway. The disposal site must be approved by the Engineer.

The Dewatering and Sediment Control products provided will be from the from the approved products list. The approved products list may be viewed on the Dewatering and Sediment Collection Standard Plate, or at the following internet site:

https://apps.sd.gov/HC60ApprovedProducts/main.aspx

CONSTRUCTION ENTRANCE

The Contractor will install a Construction Entrance at locations where there is a potential for mud tracking and sediment flow from the construction site and work area onto a paved public roadway.

It is the Contractor's option to use the SDDOT Construction Entrance (See SDDOT Construction Entrance notes and details), a product from the list provided in these notes, or other products or processes as approved by the Engineer during construction.

If the Contractor elects to use one of the products listed in the table, then the Contractor will install the construction entrance product in accordance with the manufacturer's installation instructions or as directed by the Engineer.

The Contractor will maintain the construction entrance such that mud tracking and sediment flow will not enter the roadway or adjacent drainage areas. The construction entrance will be routinely inspected, and the Contractor will repair or replace material as deemed necessary by the Engineer.

The Construction Entrance provided will be from the approved product list. The approved product list may be viewed at the following internet site:

https://apps.sd.gov/HC60ApprovedProducts/main.aspx

SDDOT CONSTRUCTION ENTRANCE

If the SDDOT Construction Entrance is utilized, then the Contractor will install the SDDOT Construction Entrance in accordance with these notes and the detail drawings.

Pit run material will be obtained from a granular source and will conform to the following gradation:

Sieve Size	Percent Passing
6"	100%
#4	0-60%
#200	0-20%

The pit run material will be compacted to the satisfaction of the Engineer.

The aggregate for the granular material will conform to the following gradation requirements:

Sieve Size	Percent Passing
3"	100%
2 ½"	90-100%
1 ½"	25-60%
¾"	0-10%
½"	0-5%

The granular material will be placed in 6" maximum lifts.

It is anticipated that the granular material will need to be periodically removed and replaced as it becomes inundated with mud and sediment.

The Reinforcement Fabric (MSE) will conform to Section 831 of the Specifications. The Reinforcement Fabric (MSE) will be on the Approved Products List for this material or will be certified by the supplier to meet this specification prior to installation.

The Reinforcement Fabric (MSE) should be kept as taut as possible prior to placing.

Equipment will not be allowed on the Reinforcement Fabric (MSE) until the first lift of granular material is in place.

All seams in the Reinforcement Fabric (MSE) will be overlapped at least 2' and shingled.

Plot Scale - 1:200
Plotted From - TRPR17200
File - ...\pn\Trfp08G7\NotesSectionD.dgn

STORMWATER POLLUTION PREVENTION PLAN CHECKLIST

*(The numbers left of the title headings are **reference numbers** to the GENERAL PERMIT FOR STORM WATER DISCHARGES ASSOCIATED WITH CONSTRUCTION ACTIVITIES (Stormwater Permit))*

5.3 (2): STAFF TRAINING/SWPPP IMPLEMENTATION

To promote stormwater management awareness specific for this project, the Contractor's Erosion Control Supervisor should provide correspondence of how the SWPPP will be implemented. The Contractor's Erosion Control Supervisor is responsible for providing this information at the preconstruction meeting, and subsequently completing an attendance log, which should identify site-specific implementation of the SWPPP and the names of the personnel who attended the preconstruction meeting. Documentation of the preconstruction meeting will be filed with the SWPPP documents.

5.3 (3): DESCRIPTION OF CONSTRUCTION ACTIVITIES

- **5.3 (3a): Project Limits** (See Title Sheet)
- **5.3 (3a): Project Description** (See Title Sheet)
- **5.3 (4): Site Map(s)** (See Title Sheet and Plans)
- **Major Soil Disturbing Activities** (check all that apply)
  - ☐ Clearing and grubbing
  - ☐ Excavation/borrow
  - ☐ Grading and shaping
  - ☐ Filling
  - ☒ Other (describe): Unbonded Concrete Overlay, Nonreinforced PCC Pavement with Asphalt concrete shoulders
- **5.3 (3b): Total Project Area** 70 Acres
- **5.3 (3b): Total Area to be Disturbed** 24 Acres
- **5.3 (3c): Maximum Area Disturbed at One Time**
- **5.3 (3d): Existing Vegetative Cover (%)** 75%
- **5.3 (3d): Description of Vegetative Cover** Typical West river native
- **5.3 (3e): Soil Properties:** Silt Clay, Sandy Clay
- **5.3 (3f): Name of Receiving Water Body/Bodies** Tributary to Ponca Creek
- **5.3 (3g): Location of Construction Support Activity Areas**

5.3 (3h): ORDER OF CONSTRUCTION ACTIVITIES

- **Special sequencing requirements (**see Section C).

The Contractor will enter the Estimated Start Date.

Description	Estimated Start Date
Install stabilized construction entrance(s).	
Install perimeter protection where runoff may exit site.	
Install perimeter protection around stockpiles.	
Install channel and ditch bottom protection.	
Clearing and grubbing.	
Remove and stockpile topsoil.	
Stabilize disturbed areas.	
Install utilities, storm sewers, curb and gutter.	
Install inlet and culvert protection after completing storm drainage and other utility installations.	
Final grading.	
Final paving.	
Removal of protection devices.	
Reseed areas disturbed by removal activities.	

5.3 (5): DESCRIPTION AND MAINTENANCE OF CONTROL MEASURES

All controls will be maintained in good working order. Necessary repairs will be initiated within 24 hours of the site inspection report. Include the technical reasoning for selecting each control. (check all that apply)

Perimeter Controls (See Detail Plan Sheets)

Description	Estimated Start Date
☐ Natural Buffers (within 50 ft of Waters of State)	
☒ Silt Fence	
☐ Erosion Control Wattles	
☐ Temporary Berm / Windrow	
☐ Floating Silt Curtain	
☒ Stabilized Construction Entrances	
☐ Entrance/Exit Equipment Tire Wash	
☐ Other:	

Structural Erosion and Sediment Controls

Description	Estimated Start Date
☒ Silt Fence	
☐ Temporary Berm/Windrow	
☐ Erosion Control Wattles	
☐ Temporary Sediment Barriers	
☐ Erosion Bales	
☐ Temporary Slope Drain	
☐ Turf Reinforcement Mat	
☐ Riprap	
☐ Gabions	
☐ Rock Check Dams	
☐ Sediment Traps/Basins	
☐ Culvert Inlet Protection	
☐ Transition Mats	
☐ Median/Area Drain Inlet Protection	
☐ Curb Inlet Protection	
☐ Interceptor Ditch	
☐ Concrete Washout Facility	
☐ Work Platform	
☐ Temporary Water Barrier	
☐ Temporary Water Crossing	
☐ Permanent Stormwater Ponds	
☐ Permanent Open Vegetated Swales	
☐ Natural Depressions to allow for Infiltration	
☐ Sequential Systems that combine several practices	
☐ Other:	

Dust Controls

Description	Estimated Start Date
☐ Tarps & Wind impervious fabrics	
☐ Watering	
☐ Stockpile location/orientation	
☐ Dust Control Chlorides	
☐ Other	

Dewatering BMPs

Description	Estimated Start Date
☐ Sediment Basins	
☐ Dewatering bags	
☐ Weir tanks	
☐ Temporary Diversion Channel	
☐ Other:	

Stabilization Practices (See Detail Plan Sheets)

(Stabilization measures will begin the following work day whenever earth disturbing activity on any portion of the site has temporarily or permanently ceased. Temporary stabilization will be completed as soon as practicable but no later than 14 days after initiating soil stabilization activities (**3.18**))

Description	Estimated Start Date
☐ Vegetation Buffer Strips	
☐ Temporary Seeding (Cover Crop Seeding)	
☒ Permanent Seeding	
☐ Sodding	
☐ Planting (Woody Vegetation for Soil Stabilization)	
☒ Mulching (Grass Hay or Straw)	
☐ Fiber Mulching (Wood Fiber Mulch)	
☒ Soil Stabilizer	
☐ Bonded Fiber Matrix	
☐ Fiber Reinforced Matrix	
☐ Erosion Control Blankets	
☐ Surface Roughening (e.g. tracking)	
☐ Other:	

Wetland Avoidance

Will construction and/or erosion and sediment controls impinge on regulated wetlands? Yes ☐ No ☒ If yes, the structural and erosion and sediment controls have been included in the total project wetland impacts and have been included in the 404 permit process with the USACE.

Plot Scale - 1:200
Plotted From - TRPR17200
File - ...rp\TRp08G7\NotesSectionD.dgn

5.3 (6): PROCEDURES FOR INSPECTIONS

- Inspections will be conducted at least once every 7 days.
- All controls will be maintained in good working order. Necessary repairs will be initiated within 24 hours of the site inspection report.
- Silt fence will be inspected for depth of sediment and for tears to ensure the fabric is securely attached to the posts and that the posts are well anchored. Sediment buildup will be removed from the silt fence when it reaches $^1/_3$ of the height of the silt fence.
- Sediment basins and traps will be checked. Sediment will be removed when depth reaches approximately 50 percent of the structure's capacity, and at the conclusion of the construction.
- Check dams will be inspected for stability. Sediment will be removed when depth reaches ½ the height of the dam.
- All seeded areas will be checked for bare spots, washouts, and vigorous growth free of significant weed infestations.
- Inspection and maintenance reports will be prepared on form DOT 298 for each site inspection, this form will also be used to document changes to the SWPPP. A copy of the completed inspection form will be filed with the SWPPP documents.
- The SDDOT Project Engineer and Contractor's Erosion Control Supervisor are responsible for inspections. Maintenance and repair activities are the responsibility of the Contractor. The SDDOT Project Engineer will complete the inspection and maintenance reports and distribute copies per the distribution instructions on DOT 298.

5.3 (7): POST CONSTRUCTION STORMWATER MANAGEMENT

Stormwater management will be handled by temporary controls outlined in "DESCRIPTION AND MAINTENANCE OF CONTROL MEASURES" above, and any permanent controls needed to meet permanent stormwater management needs in the post construction period will be shown in the plans and noted as permanent.

5.3 (8): POLLUTION PREVENTION PROCEDURES

5.3 (8a): Spill Prevention and Response Procedures

- **Material Management**
  - Housekeeping
    - Only needed products will be stored on-site by the Contractor.
    - Except for bulk materials the contractor will store all materials under cover and/or in appropriate containers.
    - Products must be stored in original containers and labeled.
    - Material mixing will be conducted in accordance with the manufacturer's recommendations.
    - When possible, all products will be completely used before properly disposing of the container off-site.
    - The manufacturer's directions for disposal of materials and containers will be followed.
    - The Contractor's site superintendent will inspect materials storage areas regularly to ensure proper use and disposal.
    - Dust generated will be controlled in an environmentally safe manner.
  - Hazardous Materials
    - Products will be kept in original containers unless the container is not resealable and provide secondary containment as applicable.
    - Original labels and material safety data sheets will be retained in a safe place to relay important product information.
    - If surplus product must be disposed of, manufacturer's label directions for disposal will be followed.
    - Maintenance and repair of all equipment and vehicles involving oil changes, hydraulic system drain down, de-greasing operations, fuel tank drain down and removal, and other activities which may result in the accidental release of contaminants will be conducted on an impervious surface and under cover during wet weather to prevent the release of contaminants onto the ground.
    - Wheel wash water will be collected and allowed to settle out suspended solids prior to discharge. Wheel wash water will not be discharged directly into any stormwater system or stormwater treatment system.
    - Potential pH-modifying materials such as: bulk cement, cement kiln dust, fly ash, new concrete washings, concrete pumping, residuals from concrete saw cutting (either wet or dry), and mixer washout waters will be collected on site and managed to prevent contamination of stormwater runoff.

- **Spill Control Practices**

  In addition to the previous housekeeping and management practices, the following practices will be followed for spill prevention and cleanup if needed.
  - For all hazardous materials stored on site, the manufacturer's recommended methods for spill cleanup will be clearly posted. Site personnel will be made aware of the procedures and the locations of the information and cleanup supplies.
  - Appropriate cleanup materials and equipment will be maintained by the Contractor in the materials storage area on-site. As appropriate, equipment and materials may include items such as brooms, dust pans, mops, rags, gloves, goggles, kitty litter, sand, sawdust, and plastic and metal trash containers specifically for cleanup purposes.
  - All spills will be cleaned immediately after discovery and the materials disposed of properly.
  - The spill area will be kept well ventilated and personnel will wear appropriate protective clothing to prevent injury from contact with a hazardous substance.
  - After a spill a report will be prepared describing the spill, what caused it, and the cleanup measures taken. The spill prevention plan will be adjusted to include measures to prevent this type of spill from reoccurring, as well as clean up instructions in the event of reoccurrences.
  - The Contractor's site superintendent, responsible for day-to-day operations, will be the spill prevention and cleanup coordinator.

- **Spill Response**

  The primary objective in responding to a spill is to quickly contain the material(s) and prevent or minimize migration into stormwater runoff and conveyance systems. If the release has impacted on-site stormwater, it is critical to contain the released materials on-site and prevent their release into receiving waters. If a spill of pollutants threatens stormwater or surface water at the site, the spill response procedures outlined below must be implemented in a timely manner to prevent the release of pollutants.
  - The Contractor's site superintendent will be notified immediately when a spill or the threat of a spill is observed. The superintendent will assess the situation and determine the appropriate response.
  - If spills represent an imminent threat of escaping erosion and sediment controls and entering receiving waters, personnel will be directed to respond immediately to contain the release and notify the superintendent after the situation has been stabilized.
  - Spill kits containing appropriate materials and equipment for spill response and cleanup will be maintained by the Contractor at the site.
  - If oil sheen is observed on surface water (e.g. settling ponds, detention ponds, swales), action will be taken immediately to remove the material causing the sheen. The Contractor will use appropriate materials to contain and absorb the spill. The source of the oil sheen will also be identified and removed or repaired as necessary to prevent further releases.
  - If a spill occurs the superintendent or the superintendent's designee will be responsible for completing the spill reporting form and for reporting the spill to SDDANR.
  - Personnel with primary responsibility for spill response and cleanup will receive training by the Contractor's site superintendent or designee. The training must include identifying the location of the spill kits and other spill response equipment and the use of spill response materials.
  - Spill response equipment will be inspected and maintained as necessary to replace any materials used in spill response activities.

5.3 (8b): WASTE MANAGEMENT PROCEDURES

- **Waste Disposal**
  - All liquid waste materials will be collected and stored in approved sealed containers. All trash and construction debris from the site will be deposited in the approved containers. Containers will be serviced as necessary, and the trash will be hauled to an approved disposal site or licensed landfill. All onsite personnel will be instructed in the proper procedures for waste disposal and notices stating proper practices will be posted. The Contractor is responsible for ensuring waste disposal procedures are followed.

- **Hazardous Waste**
  - All hazardous waste materials will be disposed of in a manner specified by local or state regulations or by the manufacturer. Site personnel will be instructed in these practices, and the Contractor will be responsible for seeing that these practices are followed.

- **Sanitary Waste**
  - Portable sanitary facilities will be provided on all construction sites. Sanitary waste will be collected from the portable units which must be secured to prevent tipping and serviced in a timely manner by a licensed waste management Contractor or as required by any local regulations.

Plot Scale - 1:200
Plotted From - TRPR17200
File - ...\prj\Tfp08G7\NotesSectionD.dgn

5.3 (9): CONSTRUCTION SITE POLLUTANTS

The following materials or substances are expected to be present on the site during the construction period. These materials will be handled as noted under the heading "POLLUTION PREVENTION PROCEDURES" (check all that apply).

- ☒ Concrete and Portland Cement
- ☐ Detergents
- ☒ Paints
- ☒ Metals
- ☐ Bituminous Materials
- ☒ Petroleum Based Products
- ☒ Diesel Exhaust Fluid
- ☐ Cleaning Solvents
- ☐ Wood
- ☐ Cure
- ☐ Texture
- ☐ Chemical Fertilizers
- ☐ Other:

Product Specific Practices

- **Petroleum Products**
  All on-site vehicles will be monitored for leaks and receive regular preventive maintenance to reduce the chance of leakage. Petroleum products will be stored in tightly sealed containers which are clearly labeled.

- **Fertilizers**
  Fertilizers will be applied only in the amounts specified by the SDDOT. Once applied, fertilizers will be worked into the soil to limit the exposure to stormwater. Fertilizers will be stored in an enclosed area. The contents of partially used fertilizer bags will be transferred to sealable containers to avoid spills.

- **Paints**
  All containers will be tightly sealed and stored when not required for use. The excess will be disposed of according to the manufacturer's instructions and any applicable state and local regulations.

- **Concrete Trucks**
  Contractors will provide designated truck washout facilities on the site. These areas must be self-contained and not connected to any stormwater outlet of the site. Upon completion of construction, the area at the washout facility will be properly stabilized.

5.3 (10): NON-STORMWATER DISCHARGES

The following non-stormwater discharges are anticipated during the course of this project (check all that apply).

- ☐ Discharges from water line flushing.
- ☐ Pavement wash-water, where no spills or leaks of toxic or hazardous materials have occurred.
- ☐ Uncontaminated ground water associated with dewatering activities.

5.3 (11): INFEASIBILITY DOCUMENTATION

If it is determined to be infeasible to comply with any of the requirements of the Stormwater Permit, the infeasibility determination must be thoroughly documented in the SWPPP.

7.0: SPILL NOTIFICATION

In the event of a spill, the Contractor's site superintendent will make the appropriate notification(s), consistent with the following procedures:

- A release or spill of a regulated substance (includes petroleum and petroleum products) must be reported to SDDANR immediately **if any one of the following** conditions exists:
  - The release or spill threatens or is able to threaten waters of the state (surface water or ground water)
  - The release or spill causes an immediate danger to human health or safety
  - The release or spill exceeds 25 gallons
  - The release or spill causes a sheen on surface water
  - The release or spill of any substance that exceeds the ground water quality standards of ARSD Chapter 74:54:01
  - The release or spill of any substance that exceeds the surface water quality standards of ARSD Chapter 74:51:01
  - The release or spill of any substance that harms or threatens to harm wildlife or aquatic life
  - The release or spill is required to be reported according to Superfund Amendments and Reauthorization Act (SARA) Title III List of Lists, Consolidated List of Chemicals Subject to Reporting Under the Emergency Planning and Community Right to Know Act, US Environmental Protection Agency.

- To report a release or spill, call SDDANR at 605-773-3296 during regular office hours (8 a.m. to 5 p.m. Central Standard Time). To report the release after hours, on weekends or holidays, call South Dakota Emergency Management at 605-773-3231. Reporting the release to SDDANR does not meet any obligation for reporting to other state, local, or federal agencies. Therefore, you must also contact local authorities to determine the local reporting requirements for releases. A written report of the unauthorized release of any regulated substance, including quantity discharged, and the location of the discharge will be sent to SDDANR within 14 days of the discharge.

Plot Scale - 1:200
Plotted From - TRPR17200
File - ...\prj\Trip08G7\NotesSectionD.dgn

5.4: SWPPP CERTIFICATIONS

➢ **Certification of Compliance with Federal, State, and Local Regulations**

The Storm Water Pollution Prevention Plan (SWPPP) for this project reflects the requirements of all local municipal jurisdictions for storm water management and sediment and erosion control as established by ordinance, as well as other state and federal requirements for sediment and erosion control plans, permits, notices or documentation as appropriate.

➢ **South Dakota Department of Transportation**

I certify under penalty of law that this document and all attachments were prepared under my direction or supervision in accordance with a system designed to assure that qualified personnel properly gather and evaluate the information submitted. Based on my inquiry of the person or persons who manage the system, or those persons directly responsible for gathering the information, the information submitted is, to the best of my knowledge and belief, true, accurate, and complete. I am aware that there are significant penalties for submitting false information, including the possibility of fine and imprisonment for knowing violations.

Authorized Signature (See the General Permit, Section 7.4 (1))

➢ **Prime Contractor**

This section is to be executed by the General Contractor after the award of the contract. This section may be executed any time there is a change in the Prime Contractor of the project.

I certify under penalty of law that this document and all attachments will be revised or maintained under my direction or supervision in accordance with a system designed to assure that qualified personnel properly gather and evaluate the information submitted. Based on my inquiry of the person or persons who manage the system, or those persons directly responsible for gathering the information, the information submitted is, to the best of my knowledge and belief, true, accurate, and complete. I am aware that there are significant penalties for submitting false information, including the possibility of fine and imprisonment for knowing violations.

Authorized Signature

CONTACT INFORMATION

The following personnel are duly authorized representatives and have signatory authority for modifications made to the SWPPP:

➢ **Contractor Information**:

- Prime Contractor Name: _____
- Contractor Contact Name: _____
- Address: _____
- _____
- City: _____State: _____Zip: _____
- Office Phone: _____Field: _____
- Cell Phone: _____Fax: _____

➢ **Erosion Control Supervisor**

- Name: _____
- Address: _____
- _____
- City: _____State: _____Zip: _____
- Office Phone: _____Field: _____
- Cell Phone: _____Fax: _____

➢ **SDDOT Project Engineer**

- Name: _____
- Business Address: _____
- Job Office Location: _____
- City: _____State: _____Zip: _____
- Office Phone: _____Field: _____
- Cell Phone: _____Fax: _____

➢ **SDDANR Contact Spill Reporting**
- Business Hours Monday-Friday (605) 773-3296
- Nights and Weekends (605) 773-3231

➢ **SDDANR Contact for Hazardous Materials.**
- (605) 773-3153

➢ **National Response Center Hotline**
- (800) 424-8802.

➢ **SDDANR Stormwater Contact Information**
- SDDANR Stormwater (800) 737-8676
- Surface Water Quality Program (605) 773-3351

5.5: REQUIRED SWPPP MODIFICATIONS

➢ **5.5 (1): Conditions Requiring SWPPP Modification**

The SWPPP must be modified, including the site map(s), in response to any of the following conditions:

- When a new operator responsible for implementation of any part the SWPPP begins work on the site.
- When changes to the construction plans, sediment and erosion control measures, or any best management practices on site that are no longer accurately reflected in the SWPPP. This includes changes made in response to corrective actions triggered by inspections.
- To reflect areas on the site map where operational control has been transferred (including the date of the transfer) or has been covered under a new permit since initiating coverage under this general permit.
- If inspections by site staff, local officials, SDDANR, or U.S. EPA determine that SWPPP modifications are necessary for compliance with the Stormwater Permit.
- To reflect any revisions to applicable federal, state, or local requirements that affect the control measures implemented at the site.
- If approved by the Secretary, to reflect any changes in chemical water treatment systems or controls, including the use of a different water treatment chemical, age rates, different areas, or methods of application.

➢ **5.5 (2): Deadlines for SWPPP Modification**

Any required revisions to the SWPPP must be completed within 7 calendar days following any of the items listed above.

➢ **5.5 (3): Documentation of Modifications to the Plan**

All SWPPP modification records are required to be maintained showing the dates of when the modification occurred. The records must include the name of the person authorizing each change and a brief summary of all changes.

➢ **5.5 (4): Certification Requirements**

All modifications made to the SWPPP must be signed and certified as required in Section 7.4.

➢ **5.5 (5): Required Notice to Other Operators**

If there are multiple operators at the site, the Contractor's Erosion Control Supervisor must notify each operator that may be impacted by the change to the SWPPP within 24 hours.

When modifications as described above occur, the SWPPP will be modified to provide appropriate protection to disturbed areas, all storm water structures, and adjacent waters. The SDDOT Project Engineer will modify the SWPPP using the DOT 298 form and drawings on the plan will be modified to reflect the needed changes. Copies of the DOT 298 forms and the SWPPP will be retained on site in a designated place for review throughout the course of the project. A copy of the DOT 298 form will be given to the Contractor Erosion Control Supervisor and a copy will be emailed to the SDDOT Environmental Section in accordance with the DOT 298 Form.

Plot Scale - 1:200
Plotted From - TRPR17200
File - ...\prj\TRp08G7\NotesSectionD.dgn

OPTIONS FOR DEWATERING AND SEDIMENT COLLECTING

OPTIONS ARE NOT LIMITED TO WHAT IS SHOWN ON THIS SHEET

NO MATTER THE SYSTEM OR METHOD USED, THE CONTRACTOR MUST MEET THE TERMS OF THE TEMPORARY DISCHARGE PERMIT AND THE STORMWATER PERMIT FOR CONSTRUCTION ACTIVITIES.

Various systems, devices, and products are shown on this sheet to give the Contractor ideas of what may be used for water treatment. Other systems, devices, and products are available and can be used with approval from the Engineer.

The Contractor may elect to block a portion of storm sewer near the outfall with sand bags and pump the water out to be treated with a flocculent or allow the water to set in a lined dumpster until sediment to falls out of suspension before discharging the water. Drop inlet protection devices could also be used as part of a treatment train. The Contractor may pump dirty water into a hydroseeder and mix it with a flocculent, and spray the mixture back onto a sediment pond.

PURPOSE

The purpose of a dewatering and sediment collection system is to collect turbid storm water on the project, treat it with flocculents as needed, and capture the sediment that falls out of suspension before the water is discharged into “Waters of the US” or “Waters of the State”. Refer to the Environmental Commitments for the specific requirements for each body of water on this project.

The Contractor will need to create a Pollution Prevention Plan (PPP) for dewatering and sediment collection if the Contractor choses to discharge the water into "Waters of the US" or "Waters of the State" instead of disposing of the water off-site, using it for irrigation, or using it for hydroseeding. The Contractor will also need to obtain a Temporary Discharge Permit from the South Dakota Department of Agriculture & Natural Resources (DANR) on all projects outside of Indian Reservation boundaries.

Suggestions for dewatering and sediment collection may be shown on the plan sheets. It is the Contractor's responsibility to dewater and collect sediment. The Contractor will have to intercept and treat the stormwater before storm sewer outfalls into "Waters of the US" or "Waters of the State". The Contractor may need more than one dewatering and sediment collection system to capture and treat stormwater at multiple outfalls and/or locations simultaneously during each phase of the project.

PAYMENT

No additional payment will be made for Dewatering and Sediment Collecting. Dewatering and Sediment Collecting will be incidental to other items on the project.

DEWATERING BAGS AND SOCKS capture sediment and should be placed on pavement, vegetated areas, or gravel.

Dandy Dewatering Bag
Dandy Products, Inc.
Powell, OH
Phone: 1.800.591.2284
www.dandyproducts.com

Non-woven Sediment Filter Bags
Indian Valley Industries, Inc.
Johnson City, NY
Phone: 1.800.659.5111
www.iviindustries.com

Taurus Dewatering Bags/Socks
SolHuTec Group, Inc.
Sebastian, FL
Phone: 1.888.703.9889
www.solhutec.com

Ultra-Dewatering Bag
UltraTech International, Inc
Jacksonville, FL
Phone: 1.800.764.9563
www.spillcontainment.com

Heavy Duty Dirtbag 55
ACF Environmental
Richmond, VA
Phone: 1.800.223.9021
www.acfenvironmental.com

Pump-It Tube
Flo-Water, LLC
West Des Moines, IA
Phone: 1.515.577.6763
www.flo-water.net

FLOCCULENTS listed below are considered to be safe for the environment, if used as directed:

APS 700 Series Floc Logs
Applied Polymer Systems, Inc.
Woodstock, GA
Phone: 1.866.200.9868
http://www.siltstop.com

Floc, Floc Soc, Floc Bag
Innovative Turf Solutions Products
Cincinnati, OH
Phone: 1.513.317.8311
http://www.innovativeturfsolutions.com

Biostar CH
Hild & Associates, Inc.
Stillwater, MN
Phone: 1.715.426.5131
www.biostar-ch.com

Terra-Tubes
ACF Environmental
Buffalo Grove, IL
Phone: 1.800.366.1180
www.terratubes.com

FI-3500 Tablets
JRM Chemical, Inc.
Cleveland, OH
Phone: 1.216.475.8488
http://www.soilmoist.com

Tigerfloc
Floc Systems Inc.
Surrey, British Columbia
Phone: 1.604.343.2046
www.flocsystems.com

PORTABLE FLOCCULENT SYSTEMS

Eco Pond Rescue Water Wagon
Eco Pond Rescue LLC
Seminole, Florida
Phone: 1.727.412.4323
www.ecopondrescue.com

WTS2000 Portable Sediment Tank
Aqualete Industries, LLC
Ocean, New Jersey
Phone: 1.732.695.6336
http://aqualeteindustries.com

Dry Flocculent Mixing System
Innovative Equipment Solutions
Hot Springs, Arkansas
Phone: 1.501.525.8484
http://www.neptunewash.com

THE CASCADE SYSTEM

The cascade system is shown below and to the right for conceptual purposes only; however, the cascade system will at a minimum incorporate the use of 2 flocculent housing units and 2 water and sediment storage units. Design and construction of the water and sediment storage units are project site specific and will be the Contractor's responsibility. A water and sediment storage unit may consist of a storage bin lined with plastic, the bed of a dump truck lined with plastic, a sediment basin, or other Engineer approved unit. The treatment flocculent bag may be from the list or an approved equal.

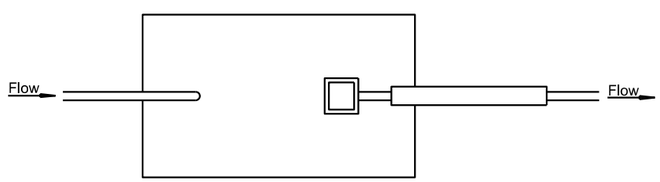

VIEW A-A

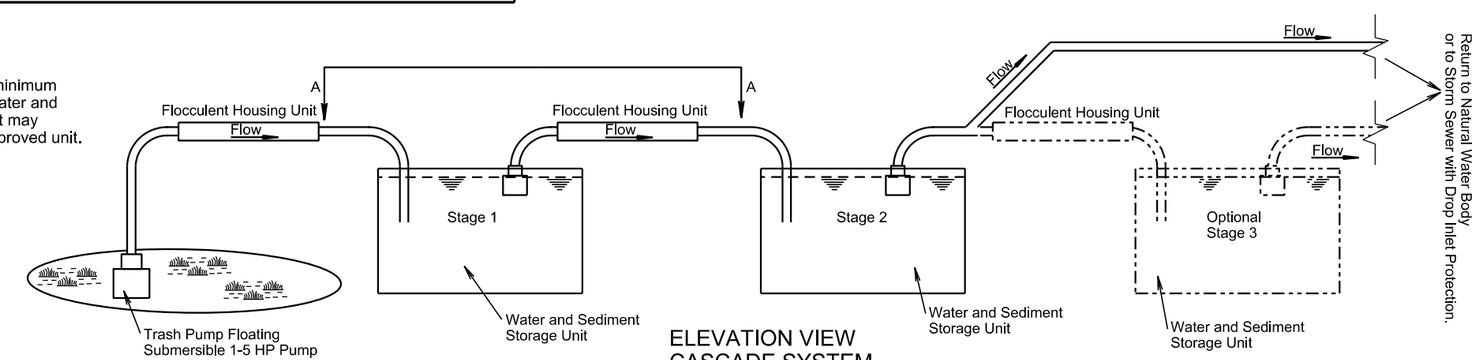

ELEVATION VIEW
CASCADE SYSTEM

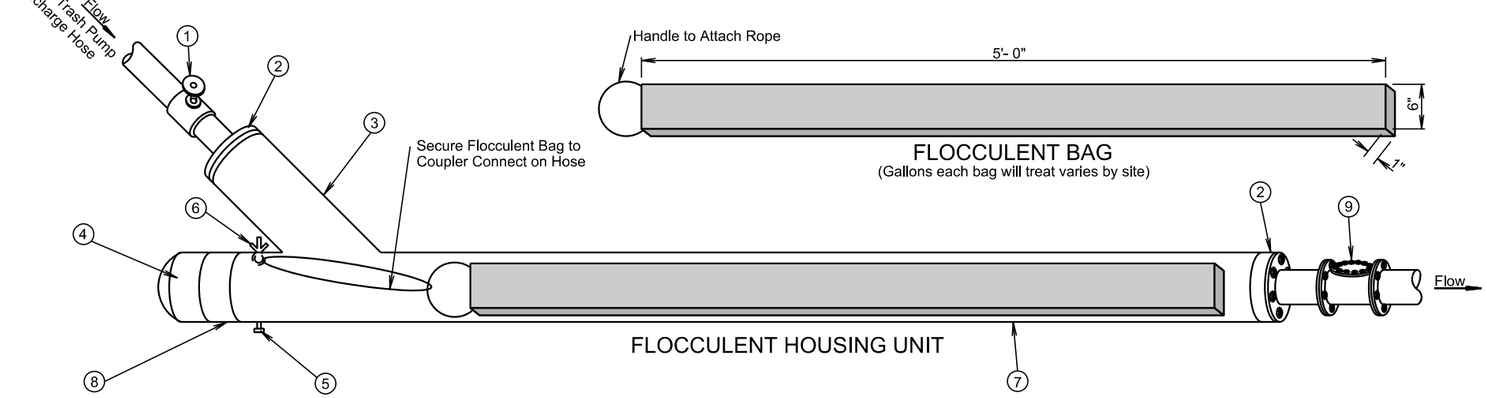

FLOCCULENT BAG
(Gallons each bag will treat varies by site)

FLOCCULENT HOUSING UNIT

FLOCCULENT HOUSING UNIT (estimated quantities for information only)			
NO.	DESCRIPTION	QUANTITY	UNIT
1	4" or 6" Dia. Sch. 40 Gate Valve	1	Each
2	4" X 6" or 6" X 8" Sch. 40 PVC Bushing	2	Each
3	6" or 8" Dia. Sch. 40 PVC "Y"	1	Each
4	6" or 8" Dia. Sch. 40 PVC Female Threaded Cap	1	Each
5	1" Dia. Sch. 80 PVC Drain Valve	1	Each
6	1/2" Eye Bolt with Wing Nut and Rubber Gromets	1	Each
7	6" or 8" Dia. Sch. 40 PVC Pipe	10	Ft.
8	6" or 8" Dia. Sch. 40 PVC Male Adapter	1	Each
9	4" or 6" Dia. Sch. 40 PVC Swing Check Valve	1	Each

FLOW RATE ESTIMATE	
Pump Type	Flow Rate (gpm)
2"	50-250
3" Gas	250-350
4" Diesel	500-750
6" Diesel	750-1000

Plot Scale - 1:300
Plotted From - TRPR17200
File - ...\rdprj\Trip06G7\Dewatering.dgn

SDDOT CONSTRUCTION ENTRANCE

STATE OF SOUTH DAKOTA	PROJECT	SHEET	TOTAL SHEETS
	NH 0018(261)263	D9	D12

Plotting Date: 09/09/2026

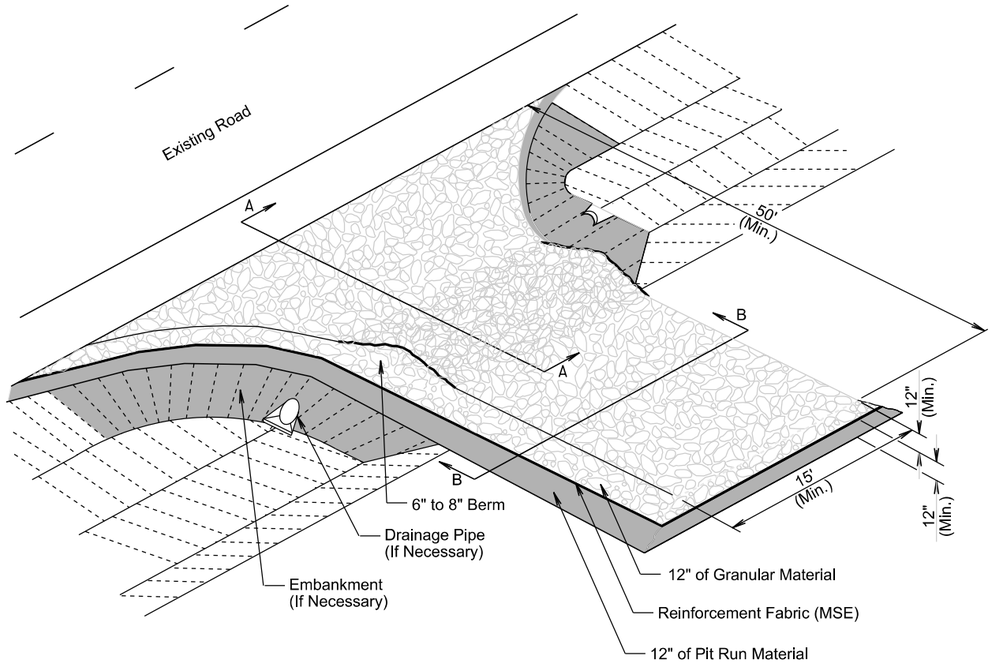

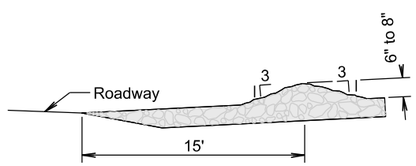

SECTION A-A

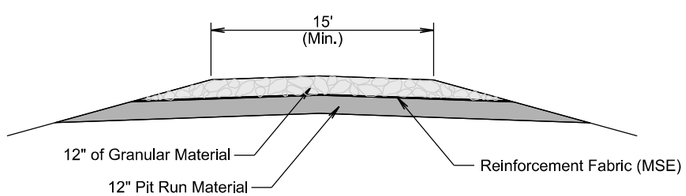

SECTION B-B

GENERAL NOTES:

If the grade of the entrance slopes down to the roadway, a berm of extra rock will be used to prevent sediment or mud from being deposited on the roadway. See SECTION A-A.

If a drainage pipe is necessary the size and type will be determined by the Contractor to meet field conditions. All cost will be incidental to the various contract items.

If embankment is necessary it will be pit run material.

TRANSVERSE TO ROADWAY

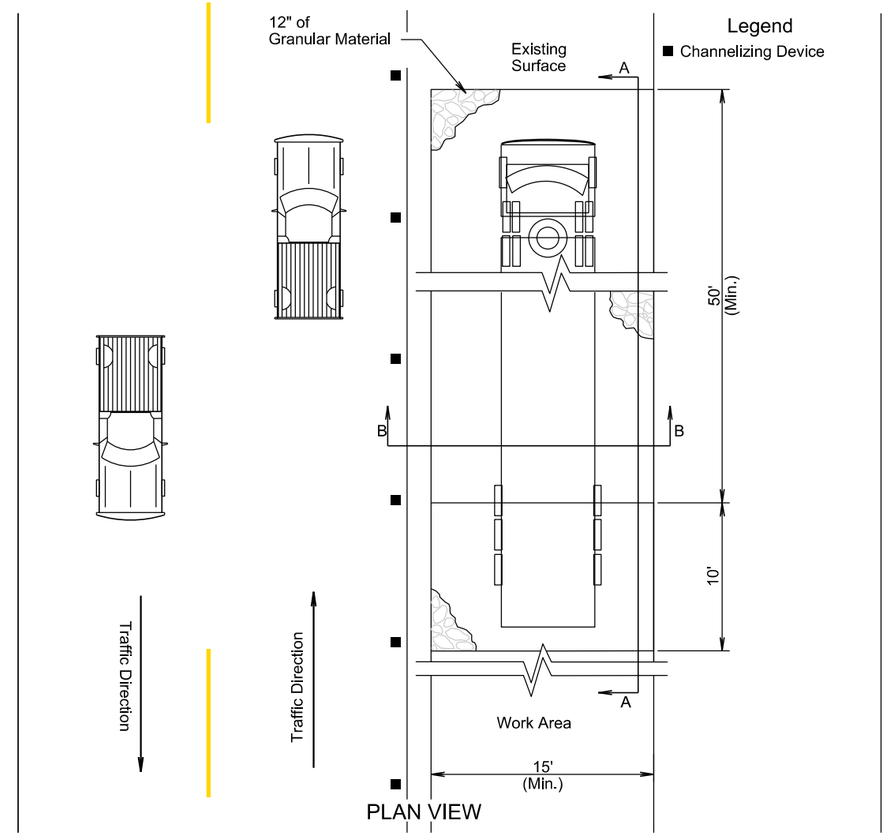

PLAN VIEW

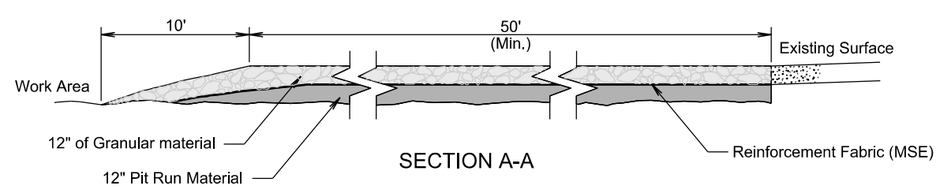

SECTION A-A

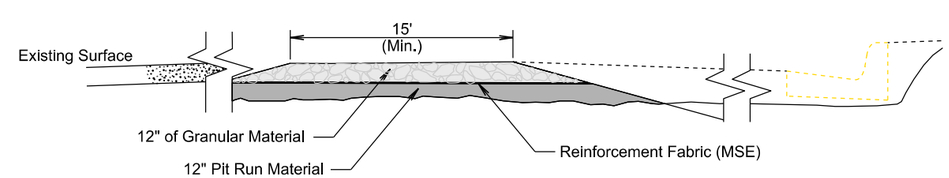

SECTION B-B

PARALLEL TO ROADWAY

Plot Scale - 1:200
Plotted From - TRPR17200
File - ...\Trip08G7\Stabilizedconent.dgn

MANUAL LOW FLOW SILT FENCE INSTALLATION

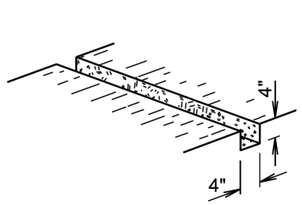

① EXCAVATE TRENCH

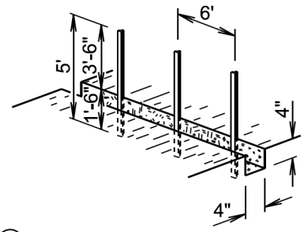

② DRIVE STEEL T FENCE POSTS

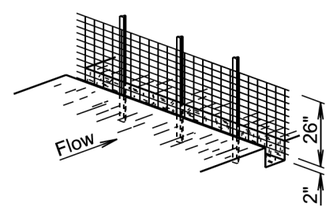

③ ATTACH 26" WOVEN WIRE FENCE TO POSTS

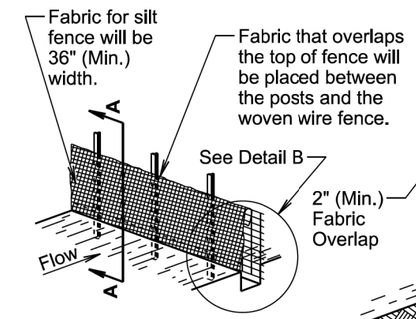

④ ATTACH SILT FENCE FABRIC

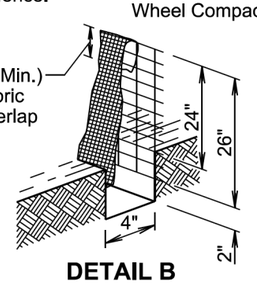

DETAIL B

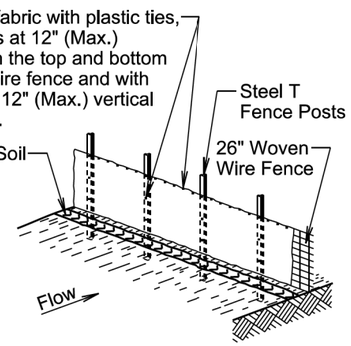

⑤ BACKFILL TRENCH AND WHEEL COMPACT SOIL

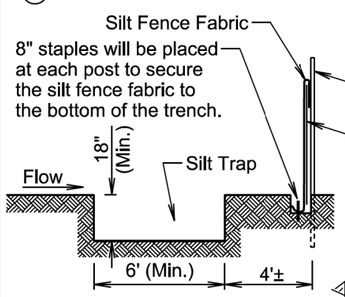

SECTION A-A

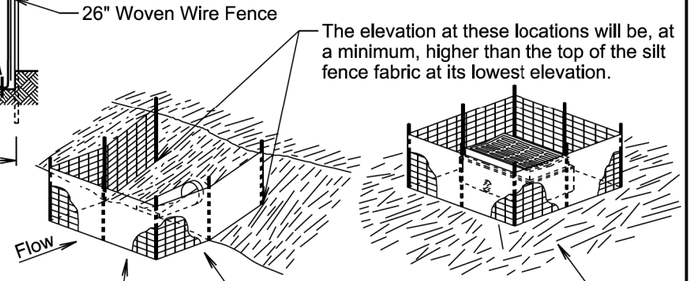

The silt fence length and width may be adjusted due to a larger pipe, multiple pipe, or other circumstances during construction as determined by the Engineer.

February 14, 2020

Published Date: 2027	SDDOT	LOW FLOW SILT FENCE AND SILT TRAP	PLATE NUMBER 734.04
			Sheet 1 of 2

MACHINE SLICED LOW FLOW SILT FENCE INSTALLATION

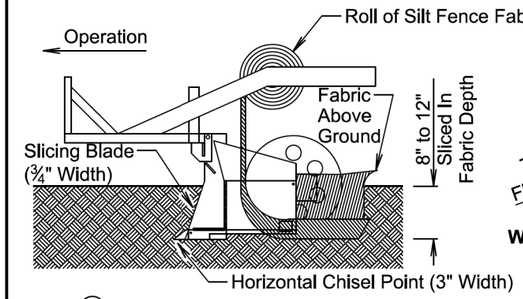

① INSTALL SILT FENCE FABRIC BY MACHINE SLICING METHOD.

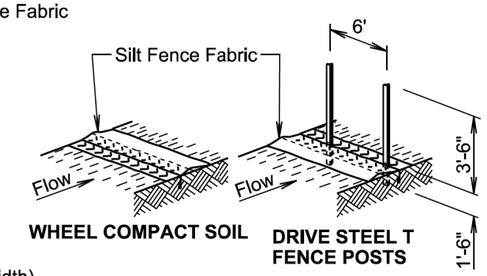

② WHEEL COMPACT SOIL ABOVE SLICED IN PORTION OF FABRIC AND THEN DRIVE STEEL T FENCE POSTS.

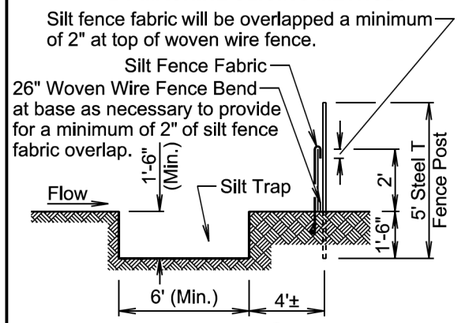

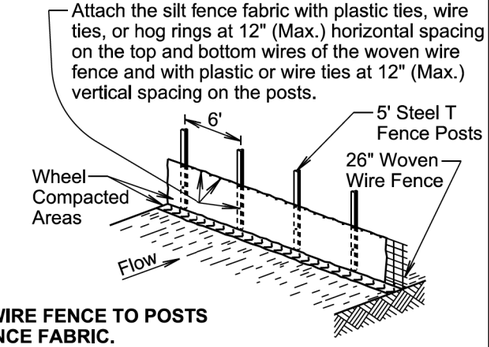

③ ATTACH 26" WOVEN WIRE FENCE TO POSTS AND ATTACH SILT FENCE FABRIC.

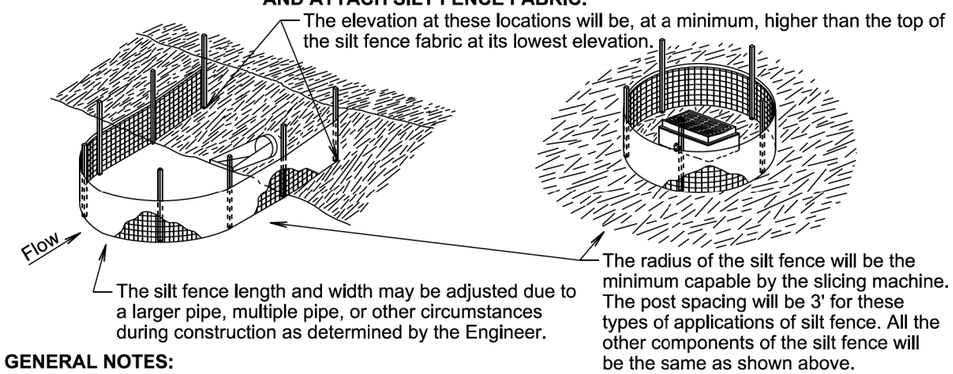

GENERAL NOTES:

A silt trap will be provided when specified by a plan note. All costs for constructing the silt trap will be incidental to the contract unit price per cubic yard for "Silt Trap".

If a trench can not be dug or the silt fence fabric can not be sliced in due to the type of earthen material (such as rock), then a row of 30 to 40 pound sandbags butted end to end will be provided on top of the extra length of silt fence fabric to prevent underflow.

February 14, 2020

Published Date: 2027	SDDOT	LOW FLOW SILT FENCE AND SILT TRAP	PLATE NUMBER 734.04
			Sheet 2 of 2

Plot Scale - 1:200
Plotted From - TRPR17200
File - ...s/3404_01s/3404_02.dgn

MANUAL HIGH FLOW SILT FENCE INSTALLATION

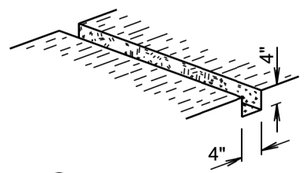

① EXCAVATE TRENCH

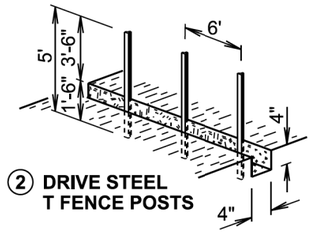

② DRIVE STEEL T FENCE POSTS

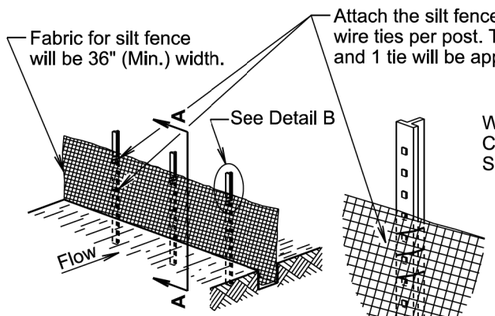

③ ATTACH SILT FENCE FABRIC

DETAIL B

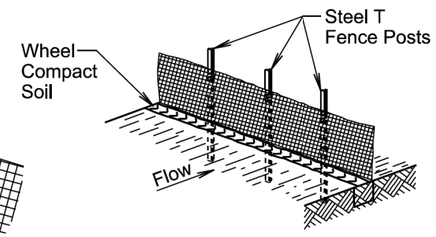

④ BACKFILL TRENCH AND WHEEL COMPACT SOIL

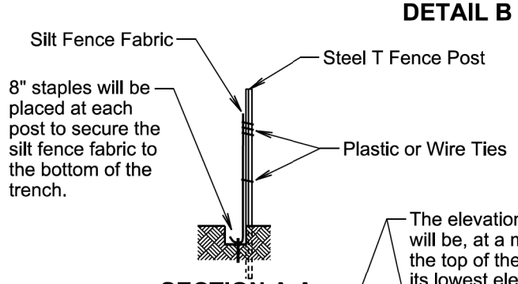

SECTION A-A

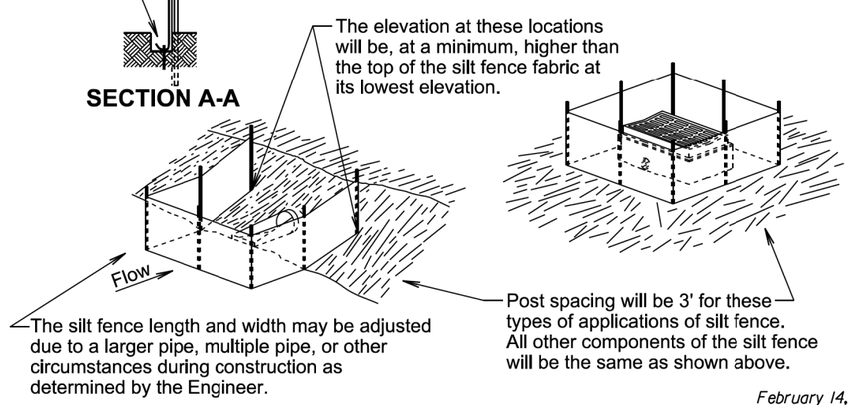

February 14, 2020

Published Date: 2027	SDDOT	HIGH FLOW SILT FENCE	PLATE NUMBER 734.05
			Sheet 1 of 2

MACHINE SLICED HIGH FLOW SILT FENCE INSTALLATION

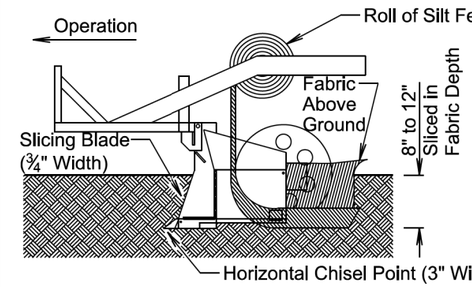

① INSTALL SILT FENCE FABRIC BY MACHINE SLICING METHOD.

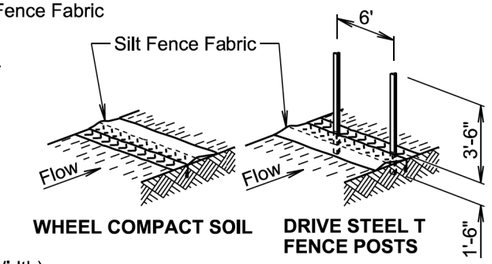

WHEEL COMPACT SOIL

DRIVE STEEL T FENCE POSTS

② WHEEL COMPACT SOIL ABOVE SLICED IN PORTION OF FABRIC AND THEN DRIVE STEEL T FENCE POSTS.

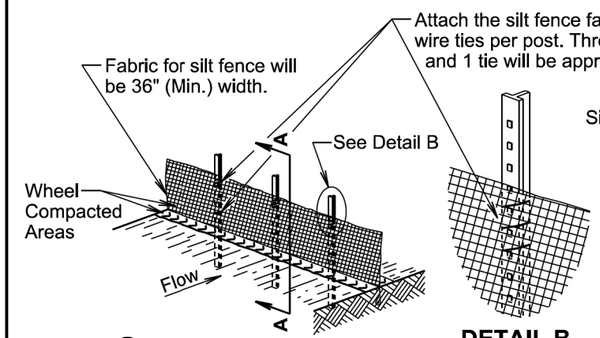

③ ATTACH SILT FENCE FABRIC

DETAIL B

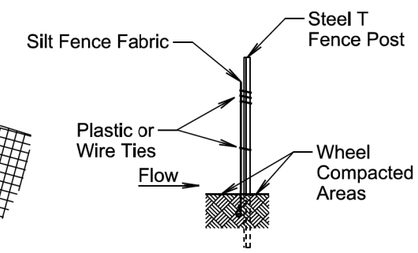

SECTION A-A

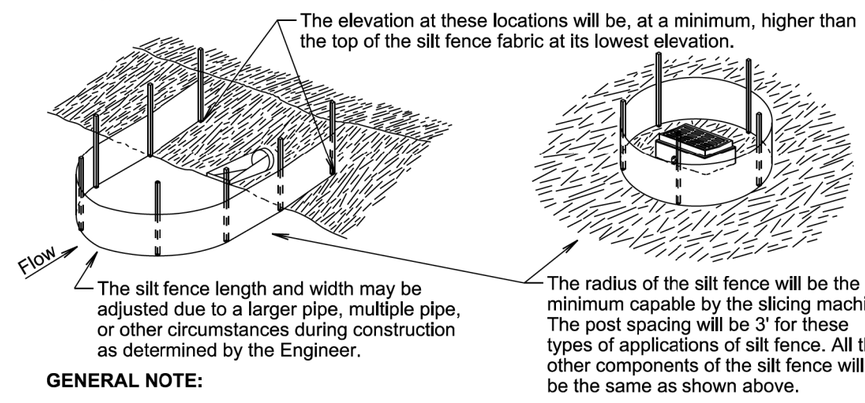

GENERAL NOTE:

If a trench can not be dug or the silt fence fabric can not be sliced in due to the type of earthen material (such as rock), then a row of 30 to 40 pound sandbags butted end to end will be provided on top of the extra length of silt fence fabric to prevent underflow.

February 14, 2020

Published Date: 2027	SDDOT	HIGH FLOW SILT FENCE	PLATE NUMBER 734.05
			Sheet 2 of 2

Plot Scale - 1:200
Plotted From - TRPR17200
File - ...\s73405_01s73405_02.dgn

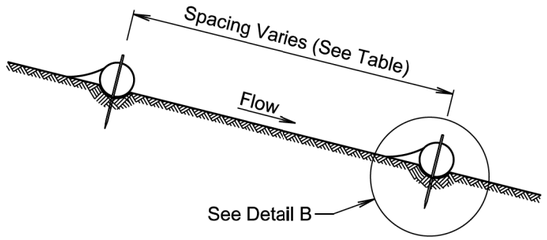

ELEVATION VIEW
(Cut or Fill Slope Installation)

CUT OR FILL SLOPE INSTALLATION	
Slope	Spacing (Ft.)
1:1	10
2:1	20
3:1	30
4:1	40

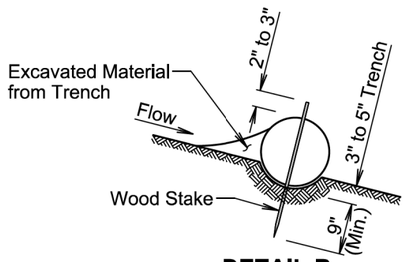

DETAIL B
(Typical of All Installations)

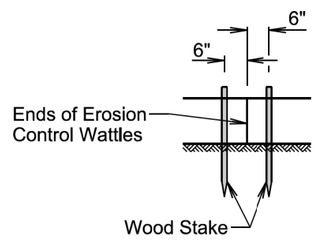

DETAIL C
(See General Notes)

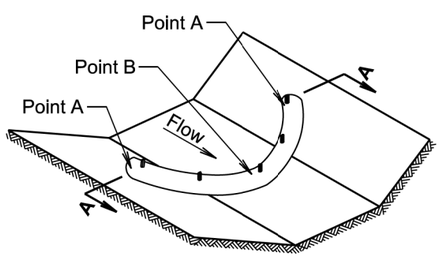

ISOMETRIC VIEW
(Ditch Installation)

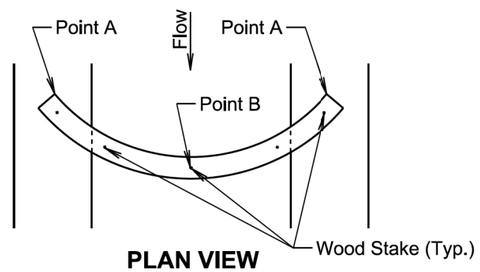

PLAN VIEW
(Ditch Installation)

DITCH INSTALLATION	
Grade	Spacing (Ft.)
2%	150
3%	100
4%	75
5%	50

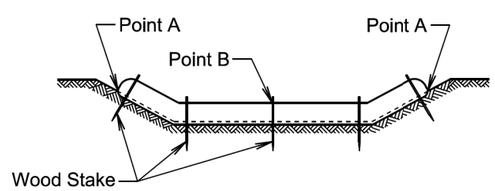

SECTION A-A

February 14, 2020

Published Date: 2027	SDDOT	EROSION CONTROL WATTLE	PLATE NUMBER 734.06
			Sheet 1 of 2

GENERAL NOTES:

At cut or fill slope installations, wattles will be installed along the contour and perpendicular to the water flow.

At ditch installations, point A must be higher than point B to ensure that water flows over the wattle and not around the ends.

The Contractor will dig a 3" to 5" trench, install the wattle tightly in the trench so that daylight can not be seen under the wattle, and then compact the soil excavated from the trench against the wattle on the uphill side. See Detail B.

The stakes will be 1"x2" or 2"x2" wood stakes, however, other types of stakes such as rebar may be used only if approved by the Engineer. The stakes will be placed 6" from the ends of the wattles and the spacing of the stakes along the wattles will be 3' to 4'.

Where installing running lengths of wattles, the Contractor will butt the second wattle tightly against the first and will not overlap the ends. See Detail C.

The Contractor and Engineer will inspect the erosion control wattles in accordance with the storm water permit. The Contractor will remove, dispose, or reshape the accumulated sediment when necessary as determined by the Engineer.

Sediment removal, disposal, or necessary shaping will be as directed by the Engineer. All costs for removing accumulated sediment, disposal of sediment, and necessary shaping will be incidental to the contract unit price per cubic yard for "Remove Sediment".

All costs for furnishing and installing the erosion control wattles including labor, equipment, and materials will be incidental to the contract unit price per foot for the corresponding erosion control wattle contract item.

All costs for removing the erosion control wattle from the project including labor, equipment, and materials will be incidental to the contract unit price per foot for "Remove Erosion Control Wattle".

February 14, 2020

Published Date: 2027	SDDOT	EROSION CONTROL WATTLE	PLATE NUMBER 734.06
			Sheet 2 of 2

Plot Scale - 1:200
Plotted From - TRPR17200
File - ...\s73406_01\s73406_02.dgn