STATE OF SOUTH DAKOTA	PROJECT	SHEET	TOTAL SHEETS
	090 W-288	1	28

Plotting Date: 09/14/2016

STATE OF SOUTH DAKOTA
DEPARTMENT OF TRANSPORTATION
PLANS FOR PROPOSED
PROJECT 090W–288
INTERSTATE 90 WBL
MINNEHAHA COUNTY
STRUCTURE REPAIR - HEAT STRAIGHTENING
PCN I4GJ

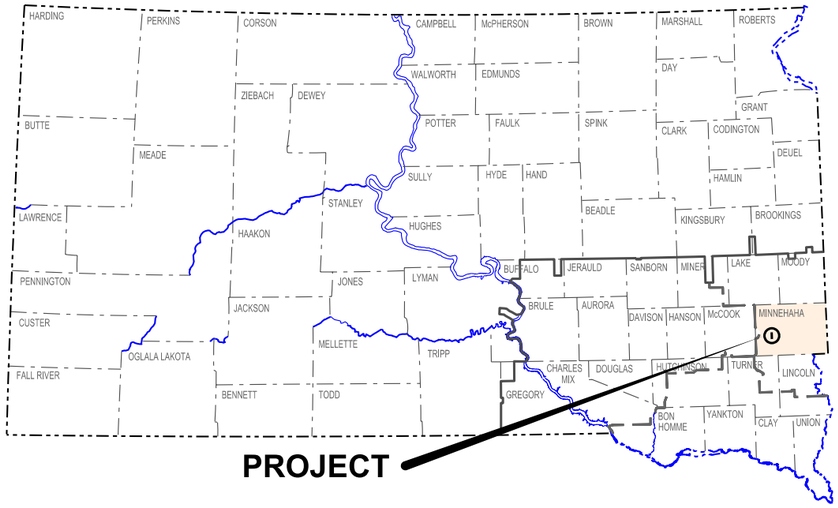

INDEX OF SHEETS

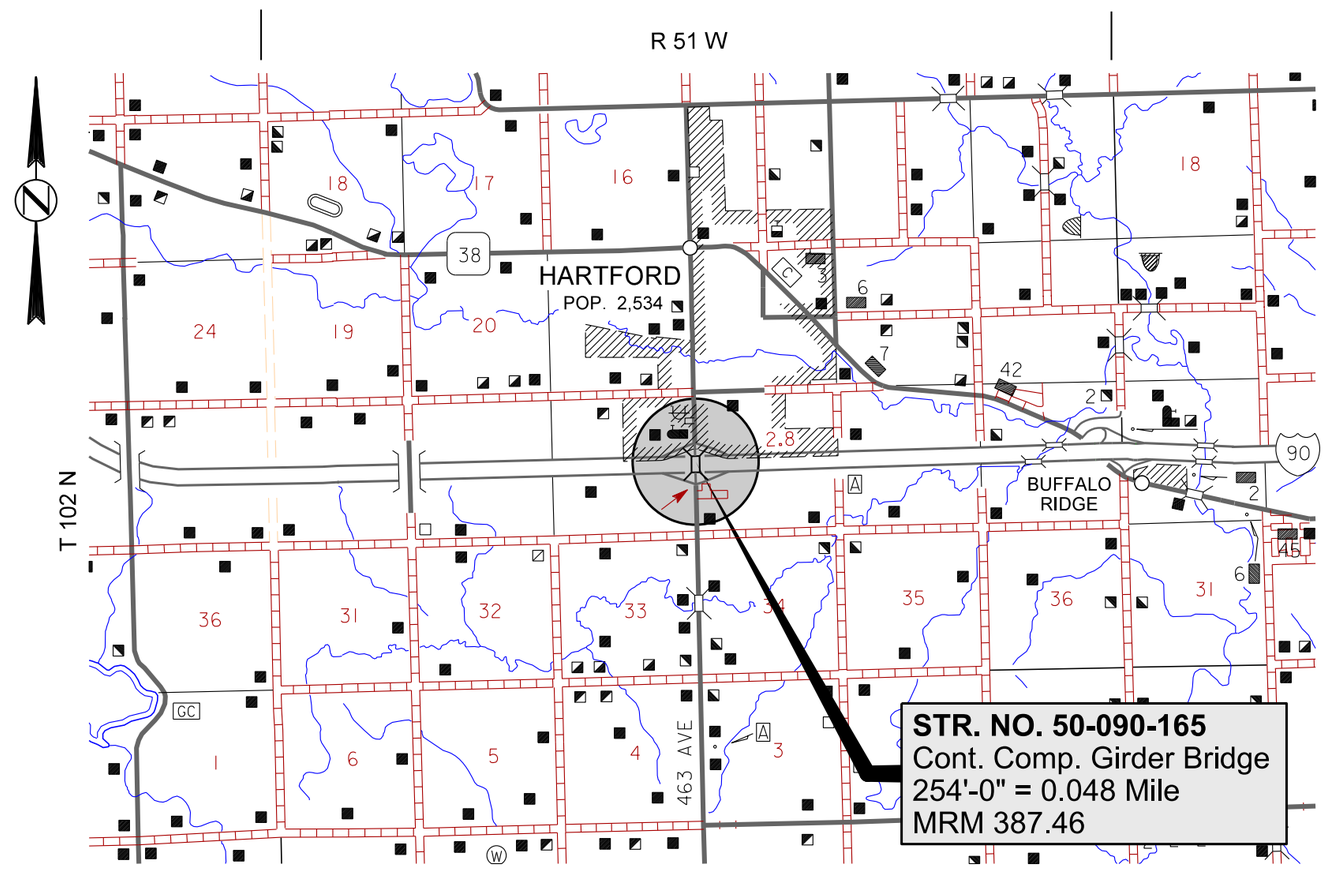

STORM WATER PERMIT
(None required)

I90W ADT (2015) 5,748
463rd Ave ADT (2015) 4,315

PLOT SCALE - 1:70000
PLOTTED FROM - TRMI1NT15
PLOT NAME - 1
FILE - ...\BRIDGE\MINNI4GJ\TITLI4GJ.DGN

ESTIMATE OF QUANTITIES & ENVIRONMENTAL COMMITMENTS

ESTIMATE OF QUANTITIES

BID ITEM NUMBER	ITEM	QUANTITY	UNIT
009E0010	Mobilization	Lump Sum	LS
634E0010	Flagging	100.0	Hour
634E0110	Traffic Control Signs	250.0	SqFt
634E0120	Traffic Control, Miscellaneous	Lump Sum	LS
634E0285	Type 3 Barricade, 8' Double Sided	2	Each
634E0420	Type C Advance Warning Arrow Board	1	Each
634E0525	Linear Delineation System Panel, Barrier Mounted	20	Each
634E0640	Temporary Pavement Marking	1,440	Ft
634E0700	Traffic Control Movable Concrete Barrier	20	Each
634E0750	Temporary Concrete Barrier End Protection	1	Each
634E0760	Temporary Concrete Barrier End Protection Module Set or Repair Kit	1	Each
634E1215	Contractor Furnished Portable Changeable Message Sign	1	Each

STRUCTURE 50-090-165

ITEM NO.	DESCRIPTION	QUANTITY	UNIT
250E0030	Incidental Work, Structure	Lump Sum	LS
410E0250	Heat Straighten Steel Member(s)	Lump Sum	LS
410E0350	Remove and Replace Web	2	Each
410E0354	Remove and Replace Web and Flange	2	Each
410E0365	Remove and Replace Transverse Stiffener	11	Each
410E0508	Field Weld	1400	In
410E0512	Grind Weld	9	In
410E0515	Drill Hole in Existing Steel	1	Each
410E0520	Surface Grinding of Structural Steel	126	SqIn
410E0550	Jack Superstructure, Steel Girder Bridge	Lump Sum	LS
410E3010	Magnetic Particle Weld Inspection	3298	In
410E3020	Ultrasonic Weld Inspection	273	In
410E3030	Magnetic Particle Weld Inspection, Impact Damage Repair	9936	SqIn
412E0120	Bridge Repainting, Class I	Lump Sum	LS
412E0500	Paint Residue Containment	Lump Sum	LS
460E0300	Breakout Structural Concrete	0.2	CuYd
460E0650	Roadway Canopy	Lump Sum	LS
460E8100	Repair Underside of Bridge Deck	3	SqFt

SPECIFICATIONS

Standard Specifications for Roads and Bridges, 2015 Edition and Required Provisions, Supplemental Specifications and Special Provisions as included in the Proposal.

ENVIRONMENTAL COMMITMENTS

An Environmental Commitment is a measure that SDDOT commits to implement in order to avoid, minimize, and/or mitigate a real or potential environmental impact. Environmental commitments to various agencies and the public have been made to secure approval of this project. An agency mentioned below with permitting authority can influence a project if perceived environmental impacts have not been adequately addressed. Unless otherwise designated, the Contractor's primary contact regarding matters associated with these commitments will be the Project Engineer. These environmental commitments are not subject to change without prior written approval from the SDDOT Environmental Office. The environmental commitments associated with this project are as follows:

COMMITMENT C: WATER SOURCE

The Contractor shall not withdraw water with equipment previously used outside the State of South Dakota without prior approval from the SDDOT Environmental Office. Thoroughly wash all construction equipment before entering South Dakota to reduce the risk of invasive species introduction into the project vicinity.

The Contractor shall not withdraw water directly from streams of the James, Big Sioux, and Vermillion watersheds without prior approval from the SDDOT Environmental Office.

Action Taken/Required:

The Contractor shall obtain the necessary permits from the regulatory agencies such as the Department of Environment and Natural Resources (DENR) and the United States Army Corps of Engineers (COE) prior to executing water extraction activities.

COMMITMENT E: STORM WATER

Construction activities constitute less than 1 acre of disturbance.

Action Taken/Required:

At a minimum and regardless of project size, appropriate erosion and sediment control measures must be installed to control the discharge of pollutants from the construction site.

COMMITMENT H: WASTE DISPOSAL SITE

The Contractor shall furnish a site(s) for the disposal of construction and/or demolition debris generated by this project.

Action Taken/Required:

Construction and/or demolition debris may not be disposed of within the Public ROW.

The waste disposal site(s) shall be managed and reclaimed in accordance with the following from the General Permit for Construction/Demolition Debris Disposal Under the South Dakota Waste Management Program issued by the Department of Environment and Natural Resources.

The waste disposal site(s) shall not be located in a wetland, within 200 feet of surface water, or in an area that adversely affects wildlife, recreation, aesthetic value of an area, or any threatened or endangered species, as approved by the Project Engineer.

If the waste disposal site(s) is located such that it is within view of any ROW, the following additional requirements shall apply:

1. Construction and/or demolition debris consisting of concrete, asphalt concrete, or other similar materials shall be buried in a trench completely separate from wood debris. The final cover over the construction and/or demolition debris shall consist of a minimum of 1 foot of soil capable of supporting vegetation. Waste disposal sites provided outside of the Public ROW shall be seeded in accordance with Natural Resources Conservation Service recommendations. The seeding recommendations may be obtained through the appropriate County NRCS Office. The Contractor shall control the access to waste disposal sites not within the Public ROW through the use of fences, gates, and placement of a sign or signs at the entrance to the site stating No Dumping Allowed.
2. Concrete and asphalt concrete debris may be stockpiled within view of the ROW for a period of time not to exceed the duration of the project. Prior to project completion, the waste shall be removed from view of the ROW or buried and the waste disposal site reclaimed as noted above.

COMMITMENT H: WASTE DISPOSAL SITE (CONTINUED)

The above requirements will not apply to waste disposal sites that are covered by an individual solid waste permit as specified in SDCL 34A-6-58, SDCL 34A-6-1.13, and ARSD 74:27:10:06.

Failure to comply with the requirements stated above may result in civil penalties in accordance with South Dakota Solid Waste Law, SDCL 34A-6-1.31.

Cost associated with furnishing waste disposal site(s), disposing of waste, maintaining control of access (fence, gates and signs), and reclamation of the waste disposal site(s) shall be incidental to the various contract items.

COMMITMENT I: HISTORICAL PRESERVATION OFFICE CLEARANCES

The SDDOT has obtained concurrence with the State Historical Preservation Office (SHPO or THPO) for all work included within the project limits and all department designated sources and designated option material sources, stockpile sites, storage areas, and waste sites provided within the plans.

Action Taken/Required:

All earth disturbing activities not designated within the plans require review of cultural resources impacts. This work includes, but is not limited to: Contractor furnished material sources, material processing sites, stockpile sites, storage areas, plant sites, and waste areas.

The Contractor shall arrange and pay for a cultural resource survey and/or records search. The Contractor has the option to contact the state Archaeological Research Center (ARC) at 605-394-1936 or another qualified archaeologist, to obtain either a records search or a cultural resources survey. A record search might be sufficient for review; however, a cultural resources survey may need to be conducted by a qualified archaeologist.

The Contractor shall provide ARC with the following: a topographical map or aerial view on which the site is clearly outlined, site dimensions, project number, and PCN. If applicable, provide evidence that the site has been previously disturbed by farming, mining, or construction activities with a landowner statement that artifacts have not been found on the site.

The Contractor shall submit the records search or cultural resources survey report and if the location of the site is within the current geographical or historic boundaries of any South Dakota reservation to SDDOT Environmental Engineer, 700 East Broadway Avenue, Pierre, SD 57501-2586 (605-773-3180). SDDOT will submit the information to the appropriate SHPO/THPO. Allow **30 Days** from the date this information is submitted to the Environmental Engineer for SHPO/THPO review.

If evidence for cultural resources is uncovered during project construction activities, then such activities shall cease and the Project Engineer shall be immediately notified. The Project Engineer will contact the SDDOT Environmental Engineer in order to determine an appropriate course of action.

SHPO/THPO review does not relieve the Contractor of the responsibility for obtaining any additional permits and clearances for Contractor furnished material sources, material processing sites, stockpile sites, storage areas, plant sites, and waste areas that affect wetlands, threatened and endangered species, or waterways. The Contractor shall provide the required permits and clearances to the Project Engineer at the preconstruction meeting.

SEQUENCE OF OPERATION

Work activities will be conducted during daytime hours. Any work beyond these hours shall be approved by the Engineer.

If the Engineer approves work during hours of darkness, lighting shall be provided as defined below:

Flagger stations, working construction equipment and active workspaces shall be lighted between sunset and sunrise. Non-glare light sources are to be provided.

Light levels as defined in NCHRP 476 shall be furnished and measured as:

Level I: 59 lux (5 foot-candles),
Level II: 108 lux (10 foot-candles),
Level III: 215 lux (20 foot-candles).

Light in conformance with Level I is to be provided at the active workspaces.

Acceptable light sources for Level I are existing roadway lighting that produce 59 lux (5 foot-candles), Contractor furnished standalone lights, or vehicle/equipment mounted lights. Standalone units shall be marked with a minimum of two reflectorized drums on an approaching traffic side.

Light in conformance with Level II shall be provided at the locations of working construction equipment.

Light in conformance with Level III is to be provided where labor intensive work is being completed such as during hand work, pavement sawing, project inspection, materials testing and flagging.

Acceptable light sources for Level II and Level III will be Contractor furnished stand-alone lights or vehicle/equipment mounted lights.

Cost for this lighting shall be included in the contract lump sum price for Traffic Control, Miscellaneous.

GENERAL MAINTENANCE OF TRAFFIC

A Type 3 Barricade shall be installed at the end of the lane closure taper.

The use of existing interstate maintenance crossovers will not be permitted.

Traffic will be permitted on the ramp shoulders when necessary to allow traffic around a workspace.

Sufficient traffic control devices have been included in these plans to provide one interstate lane closure with lane shift.

UTILITIES

The Contractor shall contact the involved utility companies through South Dakota One Call (1-800-781-7474) prior to starting work. It shall be the responsibility of the Contractor to coordinate work with the utility owners to avoid damage to existing facilities.

Utilities are not planned to be affected on this project. If utilities are identified near the improvement area, the Contractor shall contact the Project Engineer to determine modifications that will be necessary to avoid utility impacts.

STORAGE OF MATERIAL

All material shall be stored outside the clear zone except for material immediately necessary within the lane closed work area.

PEXCO FG 300 INTERSTATE GRADE CURB SYSTEM

Approximately 600 linear feet of curb/tubular marker system exists on the interchange crossroad. The Contractor shall relocate the curb/tubular marker system as directed by the Engineer as the bridge repair progresses.

Approximately 600 linear feet of curb is currently anchored to the bridge deck with concrete screws. The curb sections are approximately 5 foot in length with tubular markers attached and two anchors per section. It is anticipated the Contractor will be required to remove, relocate, and re-install 600' of the curb/tubular marker system as girder sections are repaired.

The curb/tubular marker system shall be removed, salvaged and become property of the State upon project completion. The Contractor shall deliver the curb system in good condition to the Department of Transportation Sioux Falls Area Complex, located at 5316 W. 60th Street North in Sioux Falls, South Dakota. Any damaged materials due to the Contractor's carelessness as determined by the Engineer, shall be replaced at the Contractor's expense.

Cost for the removal, relocate, salvage, and delivery of the curb system to the Sioux Falls Area Complex shall be incidental to the contract lump sum price for Traffic Control, Miscellaneous.

TEMPORARY PAVEMENT MARKING

Temporary raised pavement markers shall be the temporary pavement marking used on the project.

Cost for temporary raised pavement markers shall be included in the contract unit price per foot for Temporary Pavement Marking.

PERMANENT PAVEMENT MARKING

The State shall apply permanent pavement marking upon completion of the project.

INCIDENTS

An incident is an emergency road user occurrence, a natural disaster, or other unplanned event that affects or impedes the normal flow of traffic such as an accident, hazardous materials spill, or similar event.

The Contractor shall set up a meeting prior to start of work to plan and coordinate responses to an incident. The Contractor shall invite the Department of Transportation, the South Dakota Highway Patrol, the City of Hartford, Minnehaha County, and other local emergency response and law enforcement entities as deemed necessary to the meeting. The Engineer shall conduct the meeting.

The Contractor will assist in maintaining traffic as required by these plan notes and as agreed to at the meeting.

The Contractor will be required to modify messages on portable changeable message sign or relocate portable changeable message sign. The Contractor may be asked to provide flaggers to direct or detour of traffic. The Contractor should be prepared to relocate advance warning signs if determined to be necessary for a major traffic incident lasting for more than two hours. Ground mounted advance warning signs may be covered and additional portable warning signs provided.

No additional payment will be made for the modification of portable changeable message sign messages or the relocation of portable changeable message signs. Cost for flagging shall be paid at the contract unit price per Hour for Flagging. Cost for the relocation of an advanced warning sign due to an incident shall be 50% of the designated sign rate as per Section 634.5 Basis of Payment in the Standard Specifications. Cost for additional signs shall be paid at the contract unit price per square foot for Traffic Control Signs.

PORTABLE CHANGEABLE MESSAGE SIGN

A portable changeable message sign shall be used to supplement traffic control as directed by the Engineer and for any incident management needs.

REDUCED SPEED LIMITS

The R2-1 Speed Limit 45 signs and W3-5 Speed Reduction (45 MPH) signs are to be continuously used 24 hours per day 7 days per week for the duration of the project in which the traffic control moveable concrete barrier is installed.

TRAFFIC CONTROL MOVABLE CONCRETE BARRIER

20 traffic control movable concrete barrier shall be obtained from the Department of Transportation Sioux Falls Area Complex, located at 5316 W. 60th Street North in Sioux Falls., hauled, used on the project, and returned to the Sioux Falls Area Complex upon completion of the project.

Cost to pick up the traffic control movable concrete barrier from the Sioux Falls Area Complex, place it for traffic control, and return the traffic control movable barrier to the yard shall be paid for at the contract unit price per each for Traffic Control Movable Concrete Barrier.

TEMPORARY CONCRETE BARRIER END PROTECTION MODULE SET OR REPAIR KIT

The Contractor shall furnish crash tested and approved end protection on movable concrete barrier installed on this project. End protection shall be installed parallel to the roadway and a minimum of two traffic control movable concrete barrier shall be installed in line with and behind the end protection. The end protection shall be attached to the traffic control movable concrete barrier as specified by the manufacturer.

Costs for furnishing, installing, maintaining, and removing the end protection will be paid for at the contract unit price per each for Temporary Concrete Barrier End Protection. The concrete Barrier End Protection shall meet the requirements of TL3 for NCHRP 350 or MASH.

The Contractor will be required to have immediately available replacement parts for the end protection. The Contractor will be expected to repair the end protection within 24 hours after impact or damage.

Cost for replacement modules, if used, shall be paid for at the contract unit price per each for Temporary Concrete Barrier End Protection Module Set or Repair Kit.

LINEAR DELINEATION SYSTEM PANEL, BARRIER MOUNTED

A linear delineation system panel shall be attached to each side of the barrier section. The color shall be the same as the nearest pavement marking, white along outside edge lines or yellow for the left side on one way traffic sections. The linear delineation system shall be 34 inches long and 6 inches in height and be constructed of aluminum formed into a shape to provide retroreflective properties across a wide range of angles. It shall be sheeted with ASTM D4956 Type XI sheeting. The panel shall be installed at the center of the barrier when measured along the length, with the top of the panel 4 inches below the top of the barrier. Installation shall be as per the manufacturer's recommendation using stainless steel inserts and bolts. This will allow for easy removal for replacement of damaged panels or to replace with an alternate color.

Replacement of damaged linear delineation system panels shall be furnished and replaced by the Contractor. Cost associated with furnishing, installing, and maintaining the linear delineation system shall be included in the contract unit price per each for Linear Delineation System Panel, Barrier Mounted.

MOVABLE CONCRETE BARRIER ANCHOR PIN

The movable concrete barrier shall be anchored to the pavement. Approximately 60 anchor pins will be required. The pins shall be embedded a minimum of 7.5” into the underlying concrete roadway. Anticipating 5.5” of asphalt surfacing on top of the concrete, the anchor pin length of 19-1/8” is anticipated. The Contractor shall verify the anchor pin length and quantity prior to installation and adjust if necessary.

Cost for anchor pins shall be incidental to the contract unit price per each for Traffic Control Movable Concrete Barrier.

ITEMIZED LIST FOR TRAFFIC CONTROL SIGNS

		EXPRESSWAY / INTERSTATE			
SIGN CODE	SIGN DESCRIPTION	NUMBER	SIGN SIZE	SQFT PER SIGN	SQFT
R2-1	SPEED LIMIT 45	2	36" x 48"	12.0	24.0
R2-1	SPEED LIMIT 65	2	36" x 48"	12.0	24.0
R2-1	SPEED LIMIT 80	1	36" x 48"	12.0	12.0
R2-6aP	FINES DOUBLE (plaque)	1	36" x 24"	6.0	6.0
W1-4	REVERSE CURVE (L or R)	1	48" x 48"	16.0	16.0
W3-5	SPEED REDUCTION AHEAD (65 MPH)	2	48" x 48"	16.0	32.0
W3-5	SPEED REDUCTION AHEAD (45 MPH)	1	48" x 48"	16.0	16.0
W4-2	LEFT or RIGHT LANE ENDS (symbol)	2	48" x 48"	16.0	32.0
W20-1	ROAD WORK AHEAD	2	48" x 48"	16.0	32.0
W20-5	LEFT or RIGHT LANE CLOSED AHEAD	2	48" x 48"	16.0	32.0
W20-7	FLAGGER (symbol)	1	48" x 48"	16.0	16.0
G20-2	END ROAD WORK	1	48" x 24"	8.0	8.0
		EXPRESSWAY / INTERSTATE TRAFFIC CONTROL SIGNS SQFT			250.0

TYPE 3 BARRICADES

ITEM DESCRIPTION	QUANTITY
Type 3 Barricade, 8' Double Sided	2 Each

ARROW BOARDS

ITEM DESCRIPTION	QUANTITY
Type C Advance Warning Arrow Board	1 Each

WORK ZONE SPEED REDUCTION DRIVING LANE CLOSURE AND LANE SHIFT WITHOUT BARRIER

STATE OF SOUTH DAKOTA	PROJECT	SHEET	TOTAL SHEETS
	090 W-288	5	28

Plotting Date: 09/15/2016

Posted Speed Prior to Work (M.P.H.)	Spacing of Channelizing Devices (Feet) (G)	Taper Length (Feet) (L)	Spacing of Advanced Warning Signs (Feet) (A) (B) (C)
0 - 30	25	180	200
35 - 40	25	320	350
45	25	600	500
50 - 55	50	660	750
60 - 65	50	780	1000
70 - 80	50	1125	1000 1500 2640

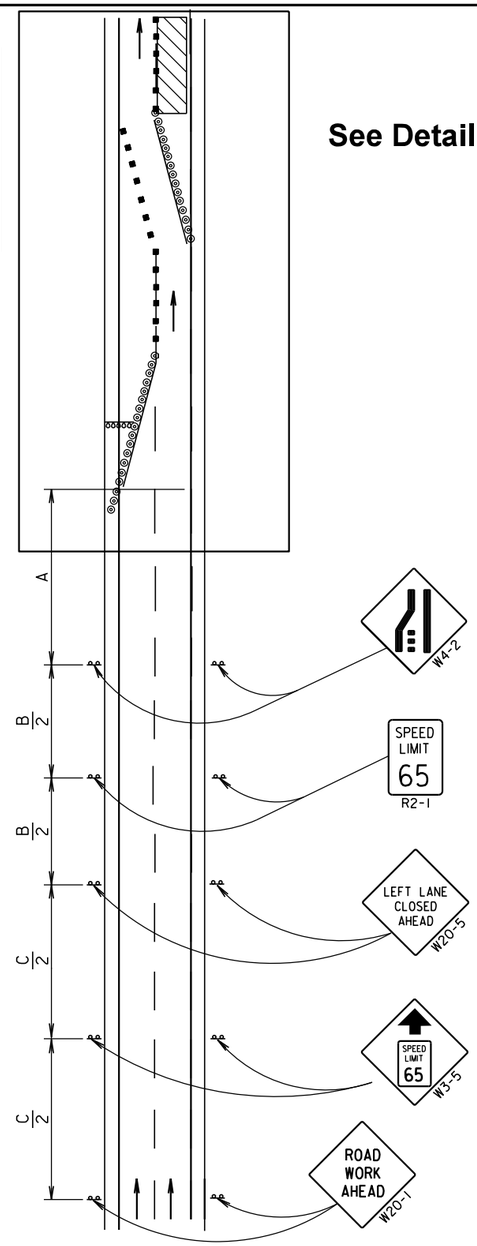

◎ Reflectorized Drum

■ Channelizing Device shall be 42" cones or drums

Detail "A"

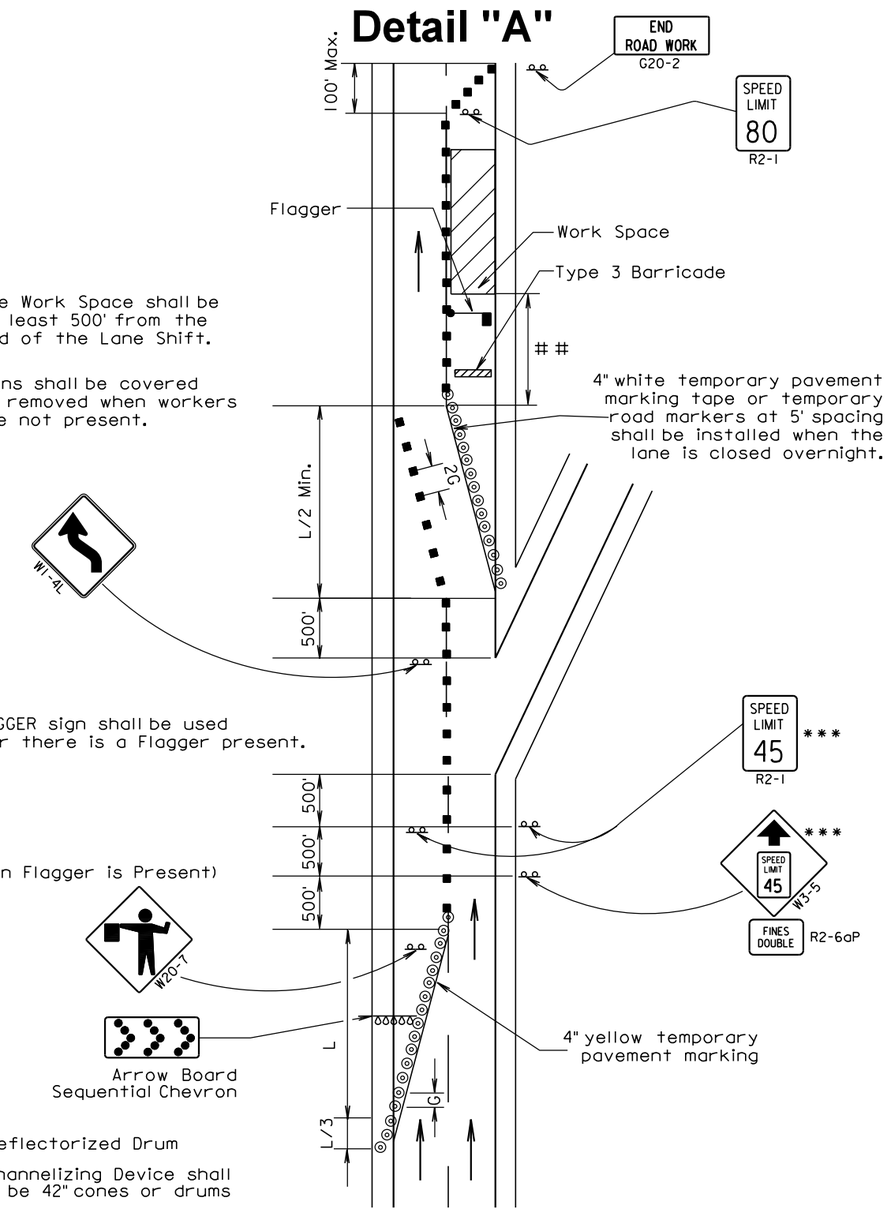

The Work Space shall be at least 500' from the end of the Lane Shift.

*** Signs shall be covered or removed when workers are not present.

The FLAGGER sign shall be used whenever there is a Flagger present.

◎ Reflectorized Drum

■ Channelizing Device shall be 42" cones or drums

WORK ZONE SPEED REDUCTION, DRIVING LANE CLOSURE AND LANE SHIFT WITH BARRIER ON CENTERLINE

STATE OF SOUTH DAKOTA	PROJECT	SHEET	TOTAL SHEETS
	090 W-288	6	28

Plotting Date: 09/15/2016

Posted Speed Prior to Work (M.P.H.)	Spacing of Channelizing Devices (Feet) (G)	Taper Length (Feet) (L)	Spacing of Advanced Warning Signs (Feet) (A) (B) (C)
0 - 30	25	180	200
35 - 40	25	320	350
45	25	600	500
50 - 55	50	660	750
60 - 65	50	780	1000
70 - 80	50	1125	1000 1500 2640

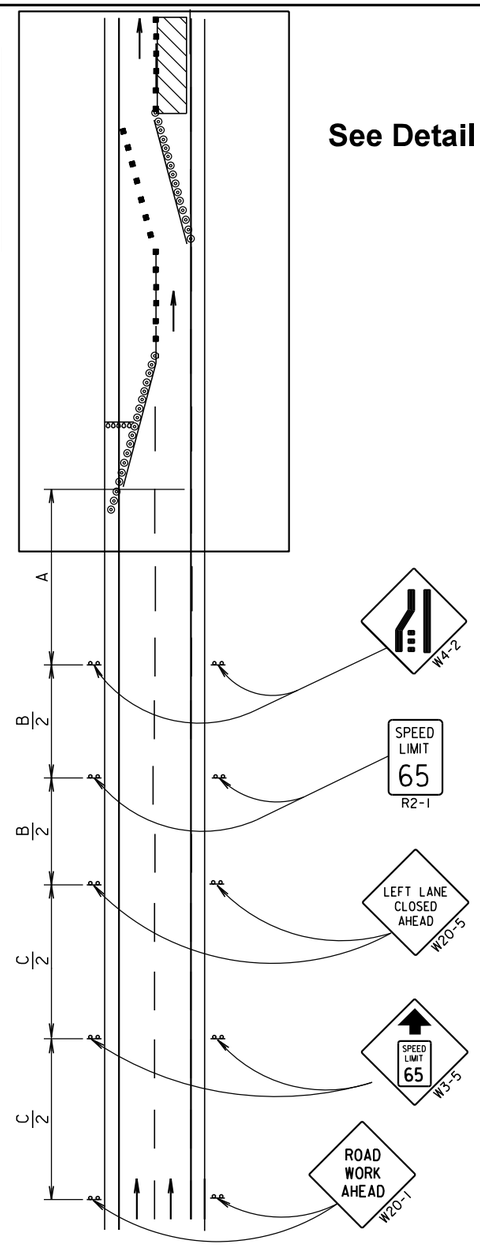

◎ Reflectorized Drum

■ Channelizing Device shall be 42" cones or drums

Detail "A"

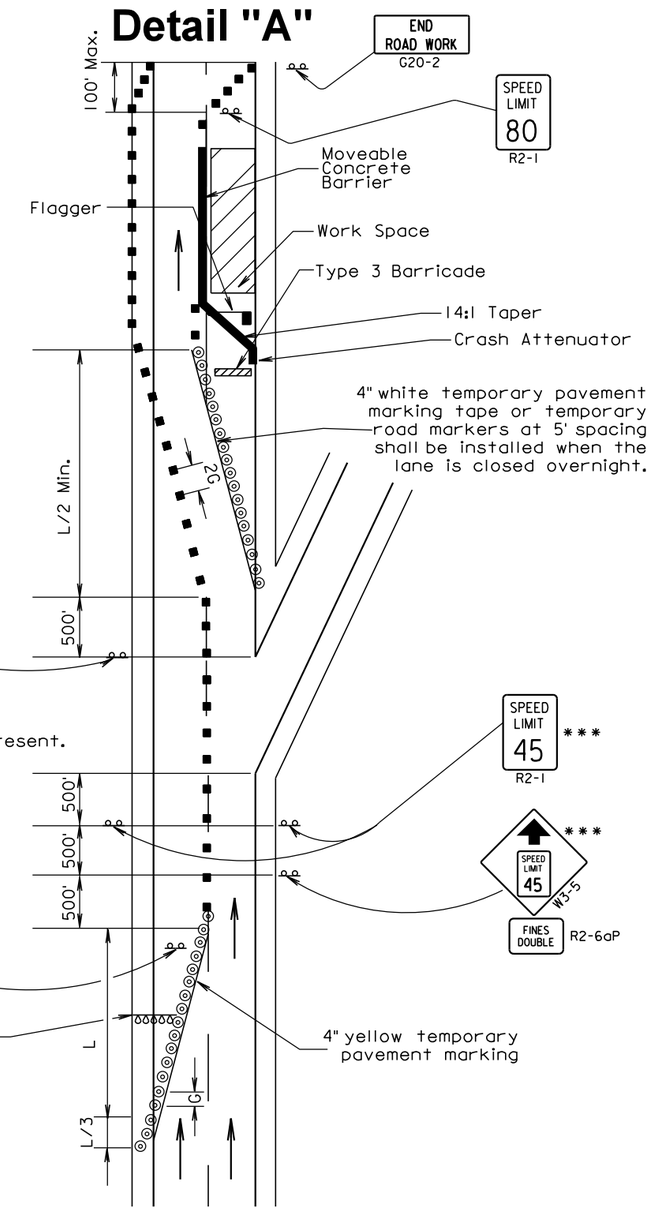

*** 45 mph signs shall be present while barrier are in use on the project.

The FLAGGER sign shall be used whenever there is a Flagger present.

◎ Reflectorized Drum

■ Channelizing Device shall be 42" cones or drums

PLOT SCALE - 1:200

PLOTTED FROM - TRSF12105

PLOT NAME - 2

FILE - ...\LANESHIFT2D.DGN

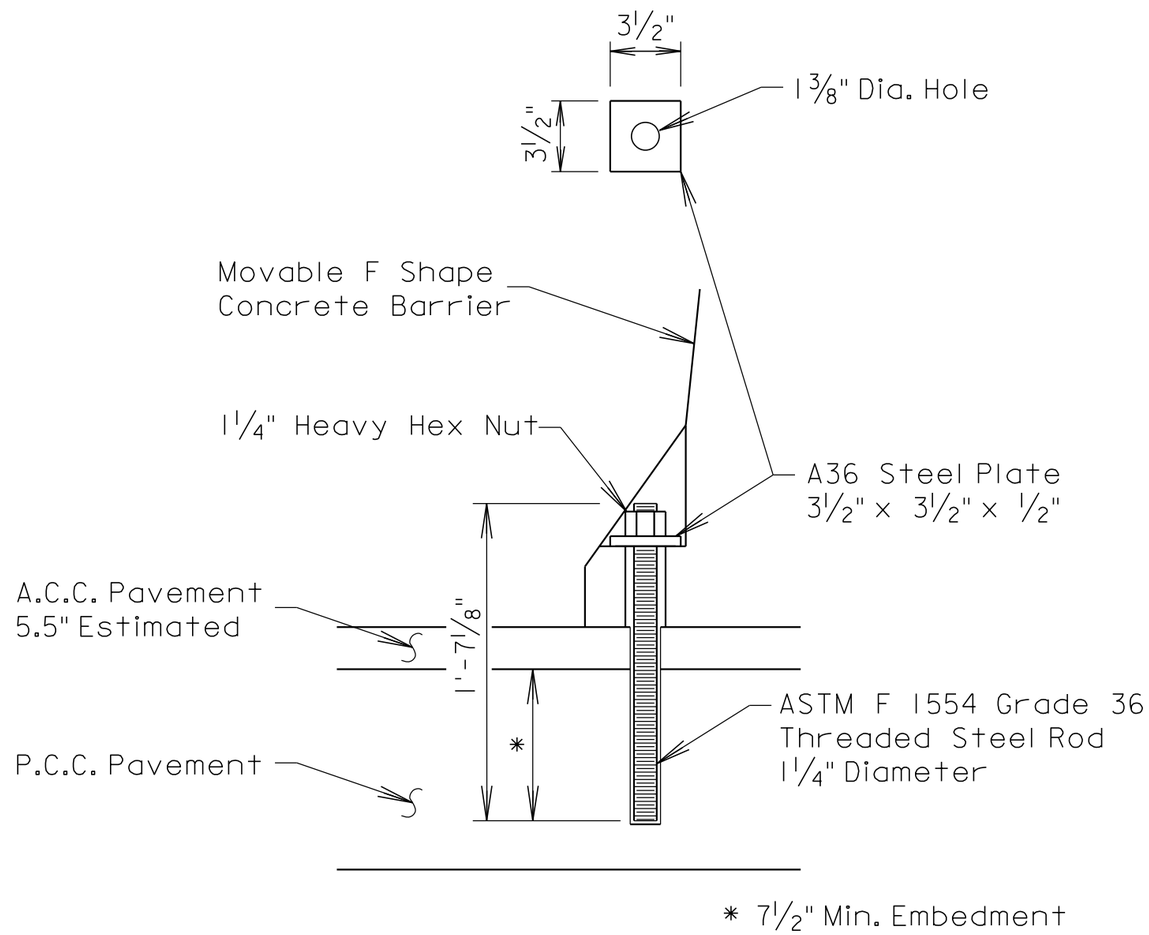

ANCHORING PIN

(For P.C.C. Pavement)

GENERAL NOTES:

The anchor bolts shall be fully threaded rods and in accordance with ASTM F 1554 Grade 36.

The diameter of the drilled holes shall not be less than 1/8 inch greater, nor more than 3/8 inch greater than the diameter of the anchor bolts as per the Manufacturer's recommendations. The drilled holes shall be blown out with compressed air using a device that will reach the bottom of the hole to ensure that all debris or loose material has been removed prior to epoxy injection.

The epoxy resin mixture shall be of a type for bonding steel to hardened concrete and shall conform to AASHTO M235 Type IV, Grade 1, 2, or 3 (Equivalent to ASTM C881, Type IV, Grade 1,2, or3).

Mix epoxy resin as recommended by the Manufacturer and apply by an injection method as approved by the Engineer. Care shall be taken to prevent epoxy from overflowing onto adjacent PCCP. Rotate the anchor bolt during installation to eliminate voids and ensure complete bonding of the bolt. Insertion of the bolts by the dipping or painting method will not be allowed.

Loads shall not be applied to the epoxy grouted anchor bolts until the epoxy resin has had sufficient time to cure as specified by the epoxy resin manufacturer.

STATE OF	PROJECT	SHEET NO.	TOTAL SHEETS
S.D.	090 W-288	8	28

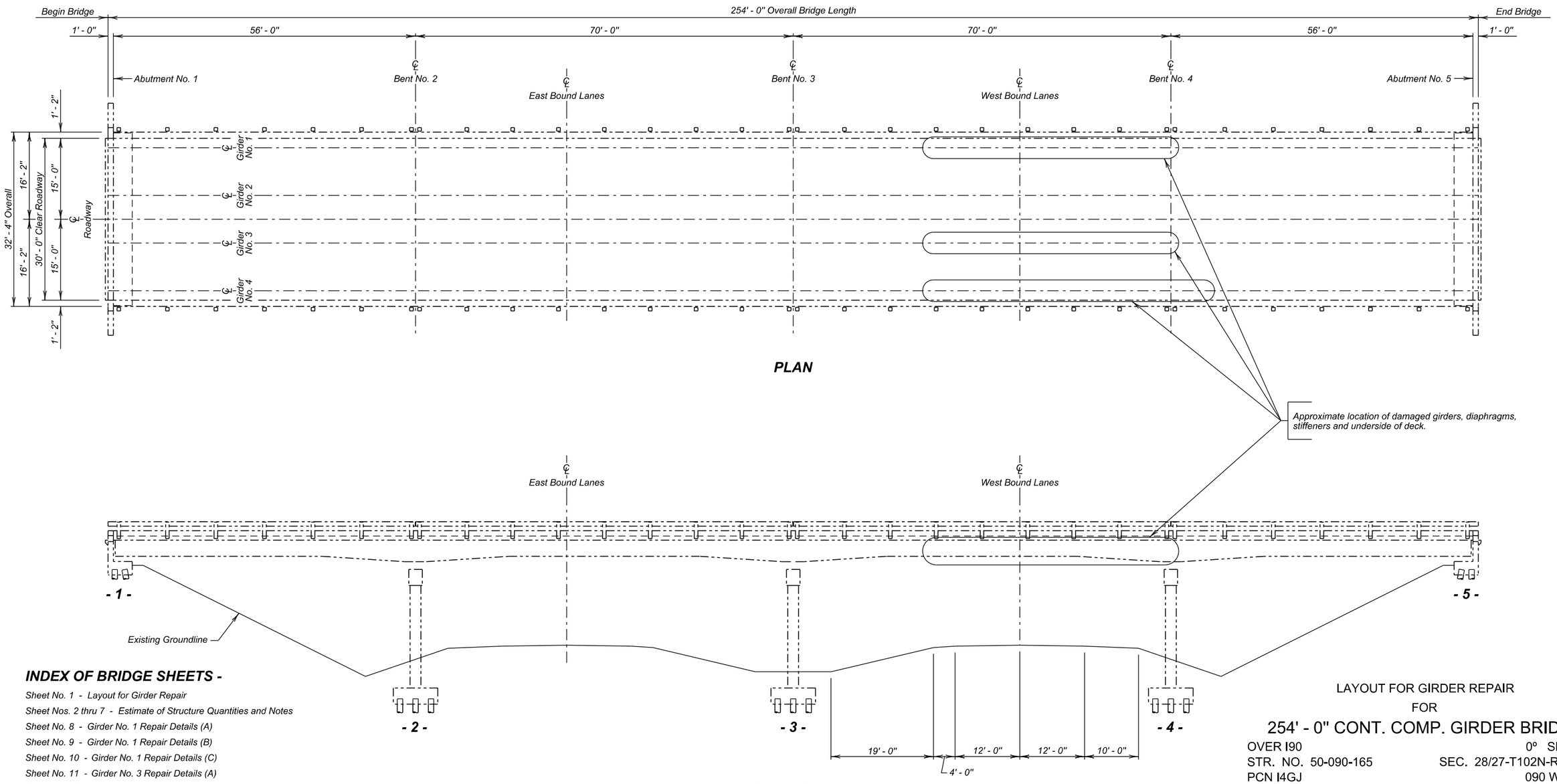

INDEX OF BRIDGE SHEETS -

LAYOUT FOR GIRDER REPAIR

FOR

254' - 0" CONT. COMP. GIRDER BRIDGE

OVER I90 — 0º SKEW

STR. NO. 50-090-165 — SEC. 28/27-T102N-R51W

PCN I4GJ — 090 W-288

HL-93

MINNEHAHA COUNTY

S. D. DEPT. OF TRANSPORTATION

AUGUST 2016

PLANS BY :
OFFICE OF BRIDGE DESIGN, SOUTH DAKOTA DEPARTMENT OF TRANSPORTATION

DESIGNED BY	CK. DES. BY	DRAFTED BY	
TK	MM	KR	BRIDGE ENGINEER
MINNI4GJ	I4GJRA01		

ESTIMATE OF STRUCTURE QUANTITIES

ITEM NO.	DESCRIPTION	QUANTITY	UNIT
250E0030	Incidental Work, Structure	Lump Sum	LS
410E0250	Heat Straighten Steel Member(s)	Lump Sum	LS
410E0350	Remove and Replace Web	2	Each
410E0354	Remove and Replace Web and Flange	2	Each
410E0365	Remove and Replace Transverse Stiffener	11	Each
410E0508	Field Weld	1400	In
410E0512	Grind Weld	9	In
410E0515	Drill Hole in Existing Steel	1	Each
410E0520	Surface Grinding of Structural Steel	126	SqIn
410E0550	Jack Superstructure, Steel Girder Bridge	Lump Sum	LS
410E3010	Magnetic Particle Weld Inspection	3298	In
410E3020	Ultrasonic Weld Inspection	273	In
410E3030	Magnetic Particle Weld Inspection, Impact Damage Repair	9936	SqIn
412E0120	Bridge Repainting, Class I	Lump Sum	LS
412E0500	Paint Residue Containment	Lump Sum	LS
460E0300	Breakout Structural Concrete	0.2	CuYd
460E0650	Roadway Canopy	Lump Sum	LS
460E8100	Repair Underside of Bridge Deck	3	SqFt

SPECIFICATIONS

1. Design Specifications: AASHTO Standard Specifications for Highway Bridges 17th Edition using Working Stress Design.

2. Construction Specifications: South Dakota Standard Specifications for Roads and Bridges, 2015 Edition and Required Provisions, Supplemental Specifications and Special Provisions as included in the Proposal.

3. All Welding and Welding Inspection shall be in conformance with the AASHTO/AWS Bridge Welding Code D1.5M/D1.5:2015 unless otherwise noted in this plan set.

PRE-CONSTRUCTION MEETING

A pre-construction meeting is required prior to beginning the repair work. The purpose of the meeting is to review the plans and procedures because of the specialty work involved. At a minimum, a representative from the Contractor and all Subcontractors shall attend this meeting along with Department personnel from the Area Office and Bridge Office. The contractor must notify the Bridge Construction Engineer and the Area Office at least three days prior to the meeting.

DETAILS AND DIMENSIONS OF EXISTING BRIDGE

All details and dimensions of the existing bridge, contained in these plans, are provided as information only. It is the Contractor's responsibility to inspect and verify the actual field conditions and any necessary dimensions affecting the satisfactory completion of the work required for this project.

SHOP PLANS

Shop plans shall be required as specified by Section 410.3 A of the Specifications.

GENERAL CONSTRUCTION

1. Welder certification shall be in accordance with section 410.3 of the Specifications.

2. The new steel web plates, stiffener plates, flange plates, and flange splice plates shall be ASTM A709 Gr. 36 T2.

NOTICE - LEAD BASED PAINT

Be advised that the paint on the steel surfaces of the existing structure is a paint containing lead. The Contractor should plan his/her operations accordingly and inform his/her employees of the hazards of lead exposure.

SCOPE OF BRIDGE WORK

All work on this structure shall be accomplished under traffic with the traffic control as shown elsewhere in the plans.

1. Install canopy and remove all loose and delaminated concrete on the underside of the bridge deck adjacent to girders G1 and G4.

2. Nondestructive Test fillet welds, groove welds, crack tips and potential crack tips at the locations shown in the plans prior to and after heat straightening and after all repairs are complete.

3. Repair crack tips and weld flaws found by Nondestructive Testing prior heat straightening.

4. Heat straighten damaged girder G1 including the top & bottom flanges, web and transverse stiffeners.

5. Heat straighten damaged girder G3 as directed by Engineer.

6. Heat straighten damaged girder G4 including the top & bottom flanges, web and transverse stiffeners.

7. Repair crack tips and weld flaws found by Nondestructive Testing after heat straightening.

8. Remove and replace the plan specified damaged stiffeners.

9. Remove, by grinding, nicks and gouges in the bottom flange of girders G1 and G4 where directed by the Engineer.

10. Install the temporary girder supports at the plan specified locations and remove and replace damaged web and flange sections of girder G1.

11. Once all structural repairs are made to girder G1 shift traffic on the bridge over girders G1 and G2 and Install the temporary girder supports at the plan specified locations of girder G4 and remove and replace damaged web and flange sections of girder G4 and damaged web section of girder G3.

12. Breakout and repair portion of the underside of the bridge deck.

13. Paint all work areas.

FIELD WELDING PROCEDURES

1. Approved Welding Procedure Specifications (WPS) will be required for this project, using the Shielded Metal Arc Welding (SMAW) process and an approved E7018 electrode from Table 4.1 of the Bridge Welding Code. The proposed WPS's for this project shall be submitted on Form N-2, from Annex N of the Bridge Welding Code, to the Bridge Construction Engineer for approval at least 2 weeks prior to construction.

2. Preparation of the base metal prior to welding shall be in accordance with Clause 3 of the Bridge Welding Code. Existing paint shall be removed a distance of 2 inches from each side of the weld.

3. Preheat will be required. Preheat and interpass temperature requirements shall be in accordance with Clause 4.2 of the Bridge Welding Code. The minimum preheat and interpass temperature shall be 320 degrees F for welds to the 11/16" and ½" girder flanges and 300 degrees F for welds to the 5/16" girder web as determined from Annex G of the Bridge Welding Code for high restraint conditions. Temperature indicating crayons shall be the minimum acceptable method for monitoring preheat and interpass temperatures.

4. SMAW electrode atmospheric exposure requirements shall comply with Clause 4.5 of the Bridge Welding Code. Electrodes shall be purchased in hermetically sealed containers. If the container shows evidence of damage, the electrodes shall be dried in a drying oven for at least one hour at temperatures between 700 and 800 degrees F before they are used. Immediately after opening a hermetically sealed container or removal of the electrodes from a drying oven, electrodes shall be stored in ovens at a temperature of at least 250 degrees F. Electrodes exposed to the atmosphere upon removal from drying or storage ovens or hermetically sealed containers shall be used within four hours maximum or redried at 450 to 550 degrees F for two hours minimum. Electrodes exposed to the atmosphere for periods less than four hours may be returned to a storage oven and maintained at a minimum of 250 degrees F for a minimum of four hours before reissue. Electrodes shall be redried no more than one time. Electrodes which have been wet shall not be used.

ESTIMATE OF STRUCTURE QUANTITIES AND NOTES

FOR

254' - 0" CONT. COMP. GIRDER BRIDGE

STR. NO. 50-090-165

AUGUST 2016

DESIGNED BY	CK. DES. BY	DRAFTED BY	
TK	MM	KR	Steve A Johnson
MINNI4GJ	I4GJRA02		BRIDGE ENGINEER

FIELD WELDING PROCEDURES (CONTINUED)

5. All welds shall be cleaned in accordance with Clause 3.11 of the Bridge Welding Code. Completed welds and adjacent areas shall be cleaned of all weld splatter, slag, smoke and heat affected paint. No intermittent or "stitch" welds will be allowed.

6. E7018 electrodes shall be used for tack welds. The size of tack welds shall not be greater than 5/16". Tack welds shall be positioned so they will be incorporated into, and re-melted by, the final weld. This applies to run-off tabs also. Tack welds shall be thoroughly cleaned prior to any weld placement.

7. Groove joint fit-up tolerances shall be +1/16", -1/8" for root opening and +10º, -5º for the bevel angle for Joint Designation B-U2 as per Clause 3.3.4 of the Bridge Welding Code. The removal dimensions of the damaged web material and the dimensions of the new web plates shall be closely controlled to achieve the specified fit-up tolerances. All groove welds shall be ground to a flush contour. Grinding shall be longitudinal. Transverse grinding will not be allowed.

WELD INSPECTION & NONDESTRUCTIVE TESTING (NDT)

1. The Contractor shall be responsible for retaining a qualified Testing Agency to perform Visual, Magnetic Particle (MT), and Ultrasonic (UT) inspection of existing and new welds and to locate existing and potential crack tips. Inspectors performing Visual, MT and UT inspection and crack tip location shall be certified in accordance with Section 410.3 D of the Construction Specifications. The Contractor shall submit the Testing Agency to the Department at the Preconstruction meeting for approval by the Bridge Construction Engineer.

2. All Nondestructive Testing (NDT) and inspection shall be done in accordance with Clause 6 of the Bridge Welding Code. The MT inspection shall be performed by the yoke method using half-wave rectified direct or alternating current. Existing paint shall be removed from the steel surfaces that require NDT. MT inspection results shall be reported on Form N-7 of Annex L and UT results shall be reported on Form F-4 of Annex F of the Bridge Welding Code.

3. The existing fillet welds noted below shall be 100% visually inspected and 100% magnetic particle inspected. In addition, all of the structural steel elements in the length of girder shown in the heat straightening zone of the plans shall be visually inspected for possible cracks. Defects shall be clearly marked on the girder in accordance with the Bridge Welding Code and a written record of the defects shall be given to the Engineer for transmittal to the Bridge Construction Engineer. Any suspected cracks shall be verified by magnetic particle inspection with the crack tips located. Crack tip locations shall be clearly marked on the girder and a written record of the crack tip location shall be given to the Engineer for transmittal to the Bridge Construction Engineer. Notify the Bridge Construction Engineer if any cracks or crack tips are located in the girder flange.

   Testing for defects and crack tips shall be made prior to any heat straightening. Repair options for the defects and crack tips shall be determined by the Bridge Construction Engineer—see note on REPAIRS FOR NDT DETERMINED FLAWS. Repairs shall be made prior to any heat straightening.

4. Existing weld and impact damage MT testing locations:

   Girder 1:

   a. Test the top and bottom flange to web welds, on both sides of the web, 6" beyond each new web splice, for an estimated 472 linear inches.

   b. Test the diaphragm transverse stiffener welds to web and to top flange on both sides of stiffeners to be replaced for an estimated 92.5 linear inches.

   c. On the transverse stiffeners to be heat straightened or have welds removed and replaced, test the stiffener welds to web (top and bottom 12") both sides of the stiffener for an estimated 220 linear inches.

   d. In the area of web and flange replacement, test 6 inches outside the removal limits for an estimated 1920 square inches. This is an estimate and may be adjusted in the field as approved by the Bridge Construction Engineer.

   Girder 3:

   e. Test the bottom flange to web weld on both sides of the web 6" beyond each side of the web only removal limits for an estimated 96 linear inches.

   f. On the transverse stiffener to have welds removed and replaced, test the stiffener welds to web (bottom 18") on both sides of the stiffener for an estimated 36 linear inches.

   d. In the area of web replacement, test 6 inches outside the removal limits for an estimated 864 square inches. This is an estimate and may be adjusted in the field as approved by the Bridge Construction Engineer.

   Girder 4:

   g. Test the top and bottom flange to web welds, on both sides of the web, 6" beyond each new web splice and 6" beyond each side of the web only removal limits, for an estimated 472 linear inches.

   h. Test the diaphragm transverse stiffener welds to web and to top flange on both sides of stiffeners to be replaced for an estimated 92.5 linear inches.

   i. On the transverse stiffeners to be heat straightened or have welds removed and replaced, test the stiffener welds to web (top and bottom 12") both sides of the stiffener for an estimated 168 linear inches.

   j. In the area of web and flange replacement, test 6 inches outside the removal limits. Also, test 6" outside the web only removal limits, for a total test area estimate of 2184 square inches. This is an estimate and may be adjusted in the field as approved by the Bridge Construction Engineer.

4. After heat straightening, secondary cracks that develop will require MT weld inspection. The areas listed above shall be retested to ensure no additional cracks have developed. The estimated weld length and area for re-testing is 3298 linear inches and 9936 square inches.

5. New fillet welds shall be 100% visually inspected and 20% magnetic particle inspected. Based on the results of the magnetic particle and visual inspection, the Bridge Construction Engineer will determine the acceptability of the completed fillet welds and any recommended repairs. Rejectable defects in new welds shall be repaired in accordance with the Bridge Welding Code. Repaired welds shall be re-inspected after all repairs are complete. The estimated length for MT inspection is 389 linear inches.

6. New groove welds shall be 100% visually inspected and 100% ultrasonically tested. Based on the results of the ultrasonic and visual inspection, the Bridge Construction Engineer will determine the acceptability of the completed groove welds and any recommended repairs. Rejectable defects in new welds shall be repaired in accordance with the Bridge Welding Code. Repaired welds shall be re-inspected after all repairs and complete. The estimated length for UT inspection is 55 linear inches.

7. All costs including labor, equipment and any incidentals necessary to perform the visual inspection, magnetic particle inspection and crack tip location shall be incidental to the contract unit price per inch for MAGNETIC PARTICLE WELD INSPECTION.

8. All costs including labor, equipment and any incidentals necessary to perform the visual inspection, magnetic particle inspection and crack tip location in the area of web replacement, 6 inches outside the removal limits shall be incidental to the contract unit price per square inch for MAGNETIC PARTICLE WELD INSPECTION, IMPACT DAMAGE REPAIR.

ESTIMATE OF STRUCTURE QUANTITIES AND NOTES

FOR

254' - 0" CONT. COMP. GIRDER BRIDGE

STR. NO. 50-090-165

AUGUST 2016

DESIGNED BY	CK. DES. BY	DRAFTED BY	
TK	MM	KR	Steve A Johnson
MINNI4GJ	I4GJRA03		BRIDGE ENGINEER

WELD INSPECTION & NONDESTRUCTIVE TESTING (NDT)

10. All costs to remove the paint and clean all fillet welds to be nondestructive tested and remove the paint and clean all visible or potential crack tip locations shall be incidental to the contract unit price per inch for MAGNETIC PARTICLE WELD INSPECTION or contract unit price per square inch for MAGNETIC PARTICLE WELD INSPECTION, IMPACT DAMAGE REPAIR.

11. All costs including labor, equipment and any incidentals necessary to perform the visual inspection and ultrasonic inspection of groove welds shall be incidental to the contract unit price per inch for ULTRASONIC WELD INSPECTION.

12. The total plans quantity for MT and UT weld inspection is only an estimate. The weld inspection will be measured and paid for as MAGNETIC PARTICLE WELD INSPECTION; MAGNETIC PARTICLE WELD INSPECTION, IMPACT DAMAGE REPAIR; or ULTRASONIC WELD INSPECTION.

REPAIRS FOR NDT DETERMINED FLAWS

1. Repair options for weld defects and crack tips shall be determined by the Bridge Construction Engineer. Two repair options are:

    a. Drill all crack tips in the web.

    b. Repair fillet weld defects by removing the weld with the air carbon arc process and then grinding flush. Grinding shall be in the longitudinal direction. Transverse grinding will not be allowed. The repair shall then be re-welded in accordance with the Bridge Welding Code.

2. All labor, equipment, materials and incidentals necessary to drill 1" diameter holes in the web shall be incidental to the contract unit price per each for DRILL HOLE IN EXISTING STEEL.

3. All labor, equipment, materials and incidentals necessary including air carbon arc removal and grinding of welds shall be incidental to the contract unit price per inch for GRIND WELD.

4. All labor, equipment, materials and incidentals necessary to re-weld the repair shall be incidental to the contract unit price per inch for FIELD WELD.

5. Other repair options shall be at the discretion of the Bridge Construction Engineer.

UNDERSIDE OF BRIDGE DECK REPAIR

1. This work shall consist of constructing a roadway canopy, breaking out and patching of a portion of the underside of the bridge deck.

2. The Contractor shall maintain one lane of traffic in the west bound direction in the west bound lanes on Interstate 90 below the structure for the duration of the bridge deck repair. The Contractor shall include details of the lane closure sequencing in the demolition plan.

3. The Contractor shall submit a detailed demolition plan 10 days prior to any concrete removal. This demolition plan shall include all canopy details, a sequence of traffic control and a sequence of bridge deck removal and patching.

4. The Contractor shall construct a rigid canopy above the roadway under the structure to protect traffic from falling concrete, debris and other material. The canopy is an added safeguard, and is not intended to catch large pieces of falling concrete and does not relieve the Contractor of any responsibility for the safety of the public. The canopy shall meet the following minimum requirements:

    The entire system shall be above the bottom of the girders.

    Attachments shall not be made to the girders using welding.

    The canopy shall be of a design and material selected by the Contractor and approved by the Engineer.

    The canopy shall have walls which extend two feet above the bottom of the girders.

    The canopy shall be installed and removed as necessary to facilitate the entire repair project.

    The erection of the canopy shall be completed in a manner which will cause the least inconvenience to the traveling public.

5. The underside of the existing deck shall be broken out to the limits shown on the plans. Breakout limits shall be defined with a ¾" deep sawcut (unless specified otherwise in these plans), where practical, as approved by the Engineer. All existing reinforcing steel that will be exposed is scheduled for use in the new construction and shall be cleaned and straightened to the satisfaction of the Engineer. Care shall be taken not to damage the reinforcing steel during concrete breakout. Any reinforcing steel that is damaged during concrete breakout shall be replaced or repaired, as approved by the Engineer, by the Contractor at no cost to the Department.

6. Extreme care shall be used not to nick, gouge, scratch, or damage in any other way, the existing steel girders when breaking out the underside of the bridge deck. The Contractor shall not be allowed to use any impact type breakout equipment larger than power driven hand tools for removal within six inches of the top flange. At no time shall the use of any breakout method that will nick, gouge, or scratch the flange, or any other structural steel component to be reused, be allowed. In the event that any nicks, gouges, scratches, or other damage occurs, the Office of Bridge Design shall be immediately notified. All damage shall be repaired by the Contractor as recommended by the Office of Bridge Design. All costs involved in repairing any damage, including any non-destructive testing that may be required, shall be at the expense of the Contractor.

7. Concrete patching material used in the repair areas above girder G1 and G4 shall be packed, dry, rapid hardening cementitious mortar or concrete materials conforming to the requirements of ASTM C928, Type r-3 and shall contain no chlorides, magnesium or phosphates.

8. All broken out concrete and other removed material shall be disposed of by the Contractor. Disposal of discarded material shall be in accordance with the Environmental Commitment notes.

9. The roadway canopy shall be paid for at the contract lump sum price for Roadway Canopy. The payment shall include all costs associated with the Demolition Plan and all costs associated with construction, maintenance and removal of the roadway canopy.

10. All costs associated with breaking out the portion of the existing concrete deck including labor, equipment and materials necessary to complete the work shall be incidental to the contract unit price per cubic yard for Breakout Structural Concrete.

ESTIMATE OF STRUCTURE QUANTITIES AND NOTES

FOR

254' - 0" CONT. COMP. GIRDER BRIDGE

STR. NO. 50-090-165

AUGUST 2016

DESIGNED BY	CK. DES. BY	DRAFTED BY	
TK	MM	KR	Steve A Johnson
MINNI4GJ	I4GJRA04		BRIDGE ENGINEER

HEAT STRAIGHTENING

1. This Contract includes heat straightening of steel girders including bottom flange, web, transverse stiffeners and diaphragms. Heat straightening is considered specialty work for which only the following contractors are allowed to do this work. Contact:

   Judd Holt
   International Straightening Incorporated
   901 E. Bristol Drive
   Bismarck, ND 58501
   Telephone (701) 223-5972 or (701) 751-1683
   Fax (701) 751-1683
   E-mail isisteel@gmail.com
   www.steelstraightening.com

   Darryl Thomas
   Flame On, Inc.
   4415 Tom Marks Road
   Snohomish, WA 98290
   Telephone (425) 397-7039
   Fax (425) 397-7002
   Cellular (425) 501-9855
   E-mail d.thomas@flameon.com
   www.flameoninc.com

2. Heat Straightening requires nondestructive testing of both new and existing welds. The Contractor shall use a qualified testing agency subject to the approval by the Bridge Construction Engineer. The Contractor shall submit the testing agency to the Area Office for approval of the Bridge Construction Engineer. See Weld Inspection & Nondestructive Testing notes elsewhere in these plans.

3. The equipment used for heat straightening shall be an oxygen-fuel combination. The fuel shall be propane or acetylene. The application of heat shall be by single or multiple orifice tips only. The size of the tip shall be proportional to the thickness of the heated material. As a guide, the following table shows the recommended tip sizes.

Steel Thickness (in)	Orifice Type	Size
< 1/4	Single	3
3/8	Single	4
1/2	Single	5
5/8	Single	7
3/4	Single	8
1	Single Rosebud	8 3
2	Single Rosebud	8 4
3	Rosebud	5
>4	Rosebud	5

4. The temperature of all steel during heat straightening shall not exceed 1,200°F. The Contractor shall use one or more of the following methods for verifying temperatures during heat straightening:

   a. Temperature sensitive crayons

   b. Pyrometer

   c. Infrared non-contact thermometer

   Material should be heated in a single pass and shall be allowed to air cool to below 250°F prior to re-heating.

5. Hot Mechanical Straightening and Hot Working will NOT be allowed.

6. The final dimensions of heat straightened structural members shall conform to the following tolerances:

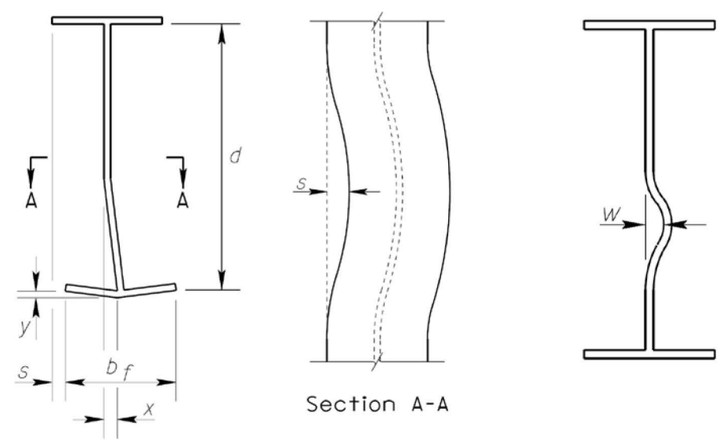

   d = original depth of web
   b_f = original width of flange
   x = final displacement of web ≤ maximum of $\frac{d}{100}$ or ¼"
   y = final displacement of edge of flange ≤ ¼"
   w = maximum final local deformation in web ≤ ¼"
   s = sweep of flange from original edge of flange ≤ ½" over 20 ft

7. All labor, materials, equipment, and any incidentals necessary to perform the required heat straightening shall be incidental to the contract lump sum price for HEAT STRAIGHTEN STEEL MEMBER(S).

JACKING SUPERSTRUCTURE

1. Vertical Jacks shall be used to support the girder on either side of Bent No. 4 at the plan specified locations, until the web and flange replacement is complete. The jacking points and loads shall be as shown in plans.

2. The vertical jacks shall have a lock nut for mechanical load holding with hydraulic pressure released.

3. The jacks shall include calibrated gauges, which indicate jack load.

4. Each jack shall have a bearing plate at both ends of sufficient area and thickness to limit the bearing stress on the loaded areas of concrete to not more than 1,600 psi, asphalt to not more than 2,000 psf and to limit the bearing stress on the loaded area of steel to not more than 20,000 psi.

5. Caution shall be exercised when transferring the girder reactions to and from the jacks to ensure that no damage to any of the existing structural components will occur due to the jacking procedure. Any damage to any of the structural components of the bridge caused by the jacking procedure will be repaired as approved by the Engineer at no cost to the Department.

   The contractor shall be required to submit a detailed jacking plan. This shall be submitted by a registered SD engineer. The jacking procedure shall be submitted 15 days prior to the start of work for the approval by the Office of Bridge Design. Included in this procedure will be the type, number, positioning, temporary supports, size, and method of synchronization between multiple jacks.

   All costs for materials, labor, equipment and incidentals necessary to perform the vertical jacking as shown by these plans shall be included in the contract lump sum price for "Jack Superstructure, Steel Girder Bridge".

REMOVE AND REPLACE WEB AND FLANGE SECTIONS

1. Cut and remove the portions of the web as shown on the plans by the air carbon arc process guided by a template. The air carbon arc process shall also be used to remove the web to bottom flange welds. All cut edges shall be ground smooth to their final size in preparation for welding. Grinding shall be longitudinal. Transverse grinding will not be allowed. The removed portions of the web and flange shall be disposed of by the Contractor.

2. The web sections shall be replaced and welded as shown in the plan details.

3. The new flange section shall be bolted to the existing flanges according to the details in the plans. Bolts to be used shall be 7/8" diameter ASTM 3125 grade A325 and shall be supplied with one hardened nut, hardened flat washer, and Direct Tension Indicator.

4. Holes in existing flange and in splice plates on the existing side of the splice shall be drilled with the entire bolted splice, flange section, and web section held securely in place by use of clamps or other devices; no tack welds will be allowed to hold splice plates. New holes shall be a maximum 1/16" larger than the diameter of the bolt. It will be permitted to use one of the splice plates (either the top or bottom) as a template.

5. During the removal and replacement procedure, additional nondestructive testing may be required. See notes regarding Weld Inspection & Nondestructive Testing (NDT).

6. All labor, equipment, materials, welding and any incidentals necessary to repair the damaged portions of the web and flange shall be incidental to the contract unit price per each for REMOVE AND REPLACE WEB AND FLANGE.

REMOVE AND REPLACE TRANSVERSE STIFFENERS

1. The damaged transverse stiffeners, including diaphragm stiffeners, as shown in the plans shall be removed by the air carbon arc process, operated electrode positive. The cuts shall be made short and the web and flanges ground smooth to remove the remaining portion of the stiffeners and welds. Grinding shall be longitudinal. Transverse grinding will not be permitted. The Contractor shall use care during the removal process not to gouge or damage the web or flanges in any way. The damaged stiffeners shall be disposed of by the Contractor.

2. The stiffeners shall be replaced and welded as shown in the plans after the web repairs are complete. The stiffeners shall be field fit with tight joints to exclude water after painting.

3. During the removal and replacement procedure, additional nondestructive testing may be required. See notes regarding Weld Inspection & Nondestructive Testing (NDT).

4. All labor, materials, equipment, welding, field drilling of holes, cutting of copes and any incidentals necessary to remove and replace the transverse stiffeners, including diaphragm stiffeners, as shown on the plans will be incidental to the contract unit price per each for REMOVE AND REPLACE TRANSVERSE STIFFENER.

REMOVE AND REPLACE DAMAGED WELDS

1. The damaged transverse stiffener welds shown in the plans shall be replaced by grinding damaged weld and re-welding. Grinding shall be in the longitudinal direction. Transverse grinding will not be allowed. The stiffener shall then be re-welded in accordance with the Bridge Welding Code.

2. All surface nicks and gouges shall be checked by non-destructive MT testing after grinding--see Weld Inspection & Nondestructive Testing (NDT) note. Repair options for the defects found by the non-destructive testing shall be determined by the Bridge Construction Engineer.

3. All costs associated with grinding the damaged transverse stiffener welds including all materials, equipment and labor shall be incidental to the contract unit price per inch for GRIND WELD.

4. All costs associated with re-welding the transverse stiffener welds including all materials, equipment and labor shall be incidental to the contract unit price per inch for FIELD WELD.

REMOVAL OF SURFACE NICKS AND GOUGES

1. Grind the bottom flange of girders G1, G3, and G4, as directed by the Engineer, to remove all sharp edges from surface nicks and gouges created by vehicle impact. The amount of material removed shall be kept at the absolute minimum necessary to remove the sharp edges and to minimize the section reduction of the existing structural members. Grinding shall be longitudinal. Transverse grinding will not be allowed. The grinding shall be done prior to heat straightening the girder.

2. All surface nicks and gouges shall be checked by non-destructive MT testing after grinding--see Weld Inspection & Nondestructive Testing (NDT) note. Repair options for the defects found by the non-destructive testing shall be determined by the Bridge Construction Engineer.

3. All costs associated with removing sharp edges from surface nicks and gouges including all materials, equipment and labor shall be incidental to the contract unit price per square inch for SURFACE GRINDING OF STRUCTURAL STEEL. Estimated quantity is 126 square inches. This quantity is included to establish bid prices. SURFACE GRINDING OF STRUCTURAL STEEL will be used and paid for only as determined by the Engineer. This item may not be encountered and could be removed from the plans.

BOLT TESTING

The certified mill test reports for all bolts used on the project shall include the test results for all of the testing specified in section 972.2 D of the Specifications. Some of these tests are supplemental tests that must be requested at the time the bolts are ordered. It is the responsibility of the Contractor to notify the bolt supplier of these requirements.

INCIDENTAL WORK, STRUCTURE

The following shall all be considered INCIDENTAL WORK, STRUCTURE:

1. The girders shall be solvent cleaned to SSPC SP-1 prior to any other work being done on the structure.

2. All power tool cleaning performed by the Contractor in preparation for Nondestructive Testing. Power tool cleaning shall be in accordance with SSPC SP-3.

3. All materials, labor, equipment, and any incidentals necessary to perform all that is described in the notes above shall be incidental to the contract lump sum price for "INCIDENTAL WORK, STRUCTURE."

ESTIMATE OF STRUCTURE QUANTITIES AND NOTES

FOR

254' - 0" CONT. COMP. GIRDER BRIDGE

STR. NO. 50-090-165

AUGUST 2016

DESIGNED BY	CK. DES. BY	DRAFTED BY	
TK	MM	KR	Steve A Johnson
MINNI4GJ	I4GJRA06		BRIDGE ENGINEER

AIR CARBON ARC CUTTING AND GOUGING

1. All removal of web sections, transverse stiffeners, diaphragm gusset plates, and welds called for by the plans shall be accomplished using the air carbon arc process unless noted otherwise. Plasma cutting will also be allowed. If the contractor plans to use plasma cutting the Bridge Construction Engineer shall be notified and will provide the Contractor with additional requirements for this cutting method.

2. Before any air carbon arc cutting or gouging begins, lay out all cut lines on the steel surfaces using a marker that will be visible during the cutting process.

3. When grinding to a specified shape or dimension is required after air carbon arc cutting, lay out the shape on the steel surface with a visible marker and grind to the layout line. Air carbon arc gouging shall be done using DC, electrode positive.

4. Extreme care shall be exercised during the cutting or gouging process so that absolutely no damage (such as nicks, gouges, splattering) to the surrounding metal occurs. Any damage caused by the air carbon arc process shall be repaired by the Contractor to the satisfaction of the Engineer at no cost to the Department.

5. Grind all surfaces cut or gouged with the air carbon arc process to remove high carbon deposits, provide a smooth finish, and prepare metal for welding and/or to accept paint.

PAINT RESIDUE REMOVAL AND CONTAINMENT

1. Paint removal on the existing bridge shall be in accordance with Section 412 of the Construction Specification except as modified by these notes.

2. The Contractor shall plan his operations to prevent releases of lead-containing material and other particulate matter into the surrounding air, water, and onto the ground, slope protection, and pavement. The Contractor shall be responsible for any corrective actions should a spill occur.

3. Collect all visible paint particles and blasting residue containing paint at the end of each workday from the work area. Inspect outside the containment and collect any paint particles or blasting residue that escaped the work area. Collect waste material by manual means, vacuum, or another method approved by the Engineer. Do not use air pressure or streaming water to assist in the waste collection process that could disperse the waste material.

4. In the event of a spill or inadvertent release, the Contractor shall immediately stop work, notify the Engineer, and report the release to the South Dakota Department of Environmental and Natural Resources (DENR). The Contractor shall be responsible for completing a spill reporting form and for all costs associated with appropriate corrective actions.

   To report a release or spill, call DENR at (605) 773-3296 during regular office hours (8 a.m. to 5 p.m. Central time). To report the release after hours, on weekends or holidays, call State Radio Communications at (605) 773-3231. Reporting the release to DENR does not meet any obligation for reporting to other state, local, or federal agencies. Therefore, the Contractor must also contact local authorities to determine the local reporting requirements for releases. DENR recommends that spills also be reported to the National Response Center at (800) 424-8802.

BRIDGE REPAINTING, CLASS I

1. All existing and new structural steel within the work affected areas shall be painted. The intent in the heat straightened & repaired areas is to paint the entire girder surface for a distance of 6 inches outside of the outer edges of the heat straightening. The finished girder shall have a uniform paint appearance as approved by the Engineer. The work affected areas outside of the heat straightening shall be painted for a distance of six inches on all sides. For informational purposes, the approximate total area under this item of repair is 435 square feet. The actual work affected area will only be known after all of the nondestructive testing and heat straightening is complete.

2. All work affected areas and all new structural steel shall be painted in accordance with Section 412 of the Standard Specifications and in accordance with SSPC Standard PA1.

3. Paint color

   Top Coat - The paint color shall be an approved green color to match the existing paint. Prior to ordering the paint, a paint chip of the green color shall be submitted to the Department for color approval.

   Primer or Intermediate Coats - Colors shall sharply contrast with each other and with the top coat.

FILL EXISTING HOLES IN BRIDGE DECK

1. After the G1 repairs have been completed and traffic has been shifted to the west side of the bridge the holes from the concrete anchors holding the traffic control items to the bridge deck shall be blown clean with air and filled with an epoxy meeting ASTM C881, Type IV Grade 3.

2. All costs associated with the filling of these holes shall be incidental to the contract lump sum price for “Traffic Control Miscellaneous”.

ESTIMATE OF STRUCTURE QUANTITIES AND NOTES

FOR

254' - 0" CONT. COMP. GIRDER BRIDGE

STR. NO. 50-090-165

AUGUST 2016

DESIGNED BY	CK. DES. BY	DRAFTED BY	
TK	MM	KR	Steve A Johnson
MINNI4GJ	I4GJRA07		BRIDGE ENGINEER

STATE OF	PROJECT	SHEET NO.	TOTAL SHEETS
S.D.	090 W-288	15	28

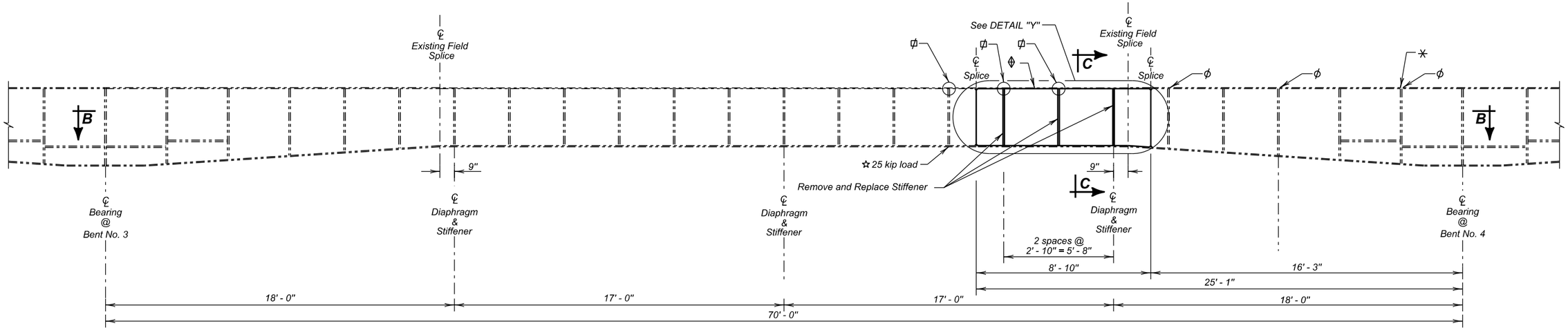

East Face of Girder No. 1

ϕ Heat Straighten Stiffener
☆ Temporary Jacking and Girder Support
ϕ Heat Straighten Top Flange
Grind and Reweld Intermediate to Top Flange Weld
✳ Grind Intermediate Stiffener to Top Flange Weld
Repair Underside of Deck
≠ Grind and reweld intermediate stiffener to web stitch weld, both sides of stiffener.

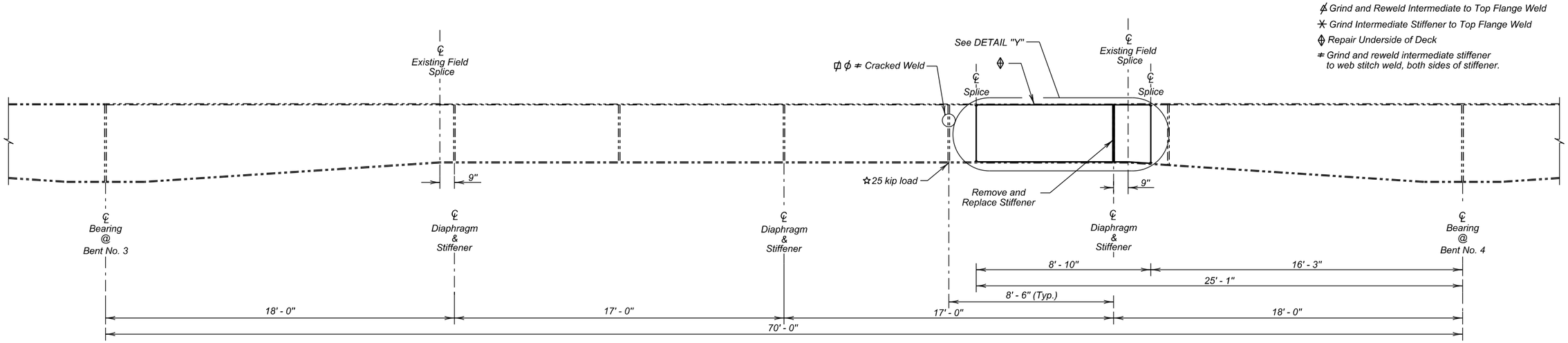

West Face of Girder No. 1

GIRDER NO. 1 REPAIR DETAILS (A)
FOR
254' - 0" CONT. COMP. GIRDER BRIDGE

OVER I90 — 0° SKEW
STR. NO. 50-090-165 — SEC. 28/27-T102N-R51W
090 W-288
HL-93

MINNEHAHA COUNTY
S. D. DEPT. OF TRANSPORTATION
AUGUST 2016

NOTES:

All stiffeners that are not to be removed and replaced, shall be heat straightened as necessary.
Girder web and bottom flange shall be heat straightened as necessary.

Concrete deck not shown for clarity.

Section B - B is located on Sheet No. 9 of 21.

Section C - C is located on Sheet No. 10 of 21.

DESIGNED BY	CK. DES. BY	DRAFTED BY	
TK	MM	KR	Steve A Johnson BRIDGE ENGINEER
MINNI4GJ	I4GJRA08		

STATE OF	PROJECT	SHEET NO.	TOTAL SHEETS
S.D.	090 W-288	16	28

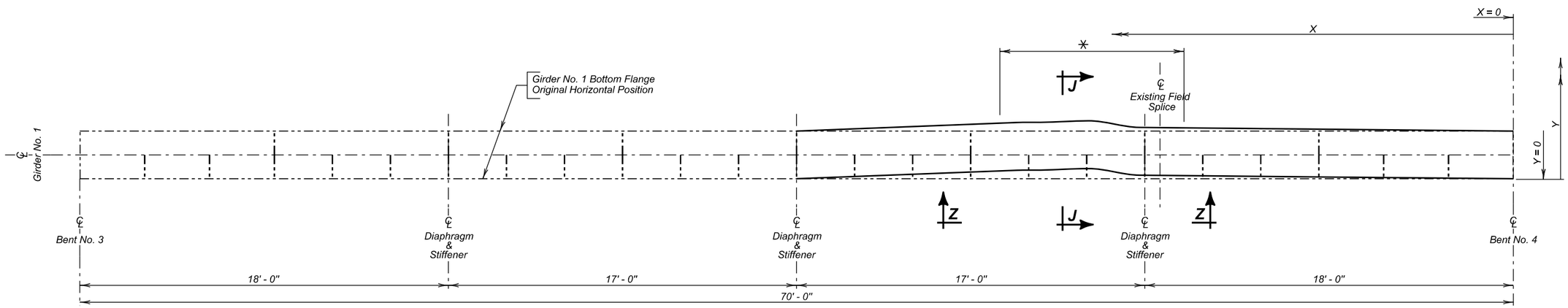

SECTION B - B GIRDER NO. 1 - BOTTOM FLANGE

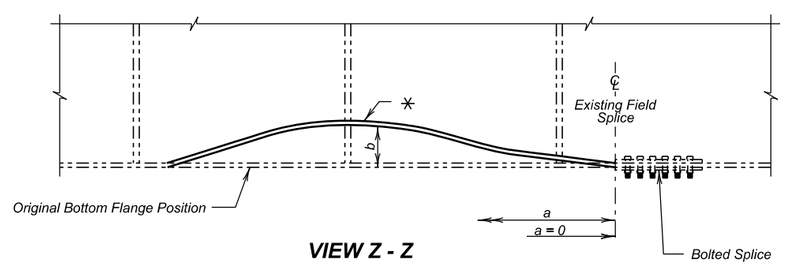

VIEW Z - Z

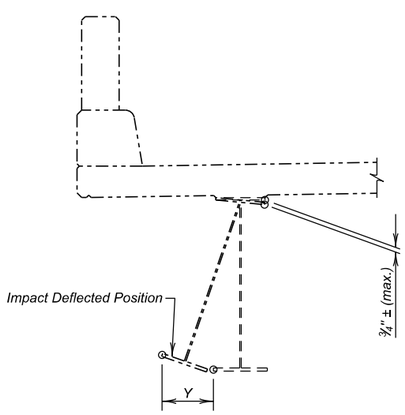

SECTION J - J
(Shown at X measurements)

GIRDER NO. 1 VERTICAL IMPACT DEFLECTED POSITION MEASUREMENTS

a	b
0"	0"
16"	2"
33"	6"
56"	5"
72"	0"

GIRDER NO. 1 HORIZONTAL IMPACT DEFLECTED POSITION MEASUREMENTS

X ±	Y ±
0"	0"
18' - 3"	2 ⅛"
20' - 9"	6"
23' - 1"	5 ⅛"
24' - 3"	5"
35' - 0"	0"

NOTES:

Heat Straighten Girder No. 1 bottom flange, web and stiffeners. See Notes.

✳ Only Minimum Heat Straightening Effort will be Required in Area to be Removed and Replaced

LAYOUT FOR GIRDER NO. 1 REPAIR (B)
FOR
254' - 0" CONT. COMP. GIRDER BRIDGE
OVER I90 — 0° SKEW
STR. NO. 50-090-165 — SEC. 28/27-T102N-R51W
090 W-288
HL-93

MINNEHAHA COUNTY
S. D. DEPT. OF TRANSPORTATION
AUGUST 2016

DESIGNED BY	CK. DES. BY	DRAFTED BY	
TK	MM	KR	Steve A Johnson BRIDGE ENGINEER
MINNI4GJ	I4GJRA09		

STATE OF	PROJECT	SHEET NO.	TOTAL SHEETS
S.D.	090 W-288	17	28

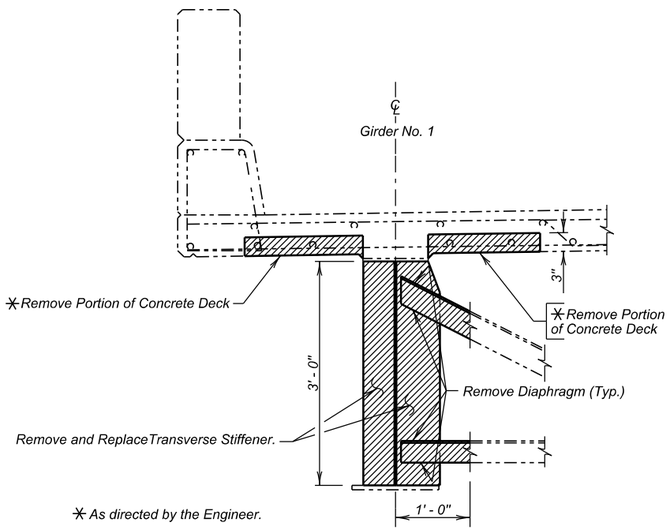

✳ As directed by the Engineer.

SECTION C - C
(Existing Diaphragm, Stiffeners and Deck)

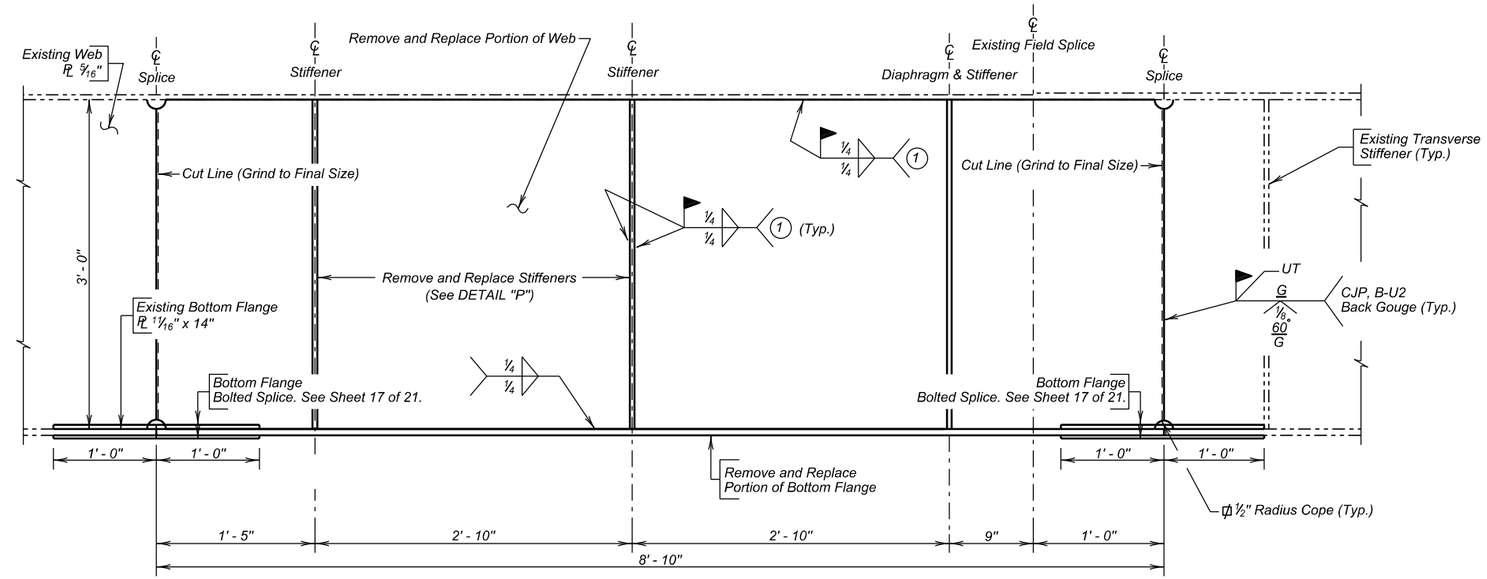

DETAIL "Y"

℄ After the new web section has been welded in place, resize the cope to a 1" radius by grinding the cut surface ensuring the weld tips are ground out. The finished surface shall be smooth.

(1) All fillet welds attaching web to flange and stiffeners to girder flanges and webs shall terminate ½" from edge of stiffener, flange, stiffener clip or cope, whichever is applicable

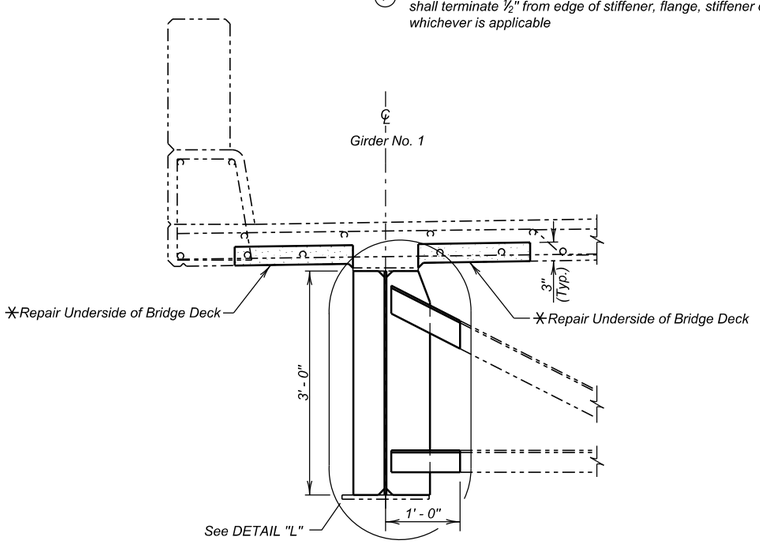

SECTION C - C
(New Stiffeners, Diaphragm and Deck)

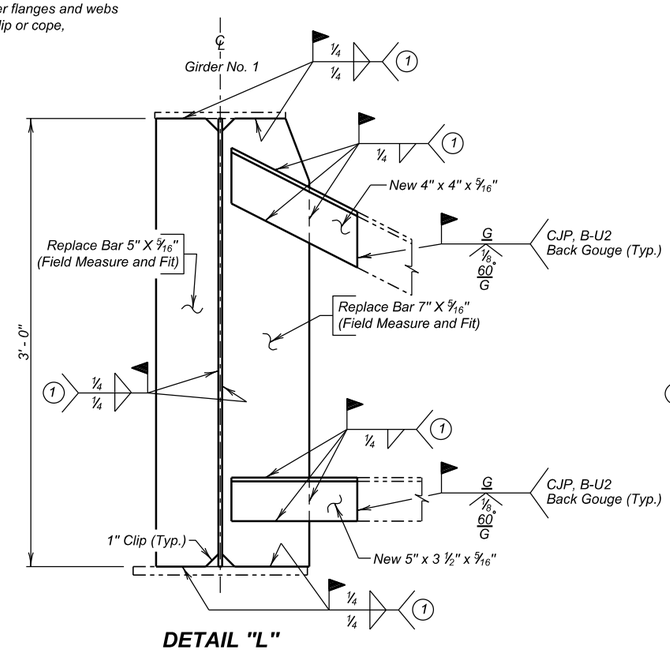

DETAIL "L"
(Deck Not Shown for Clarity)

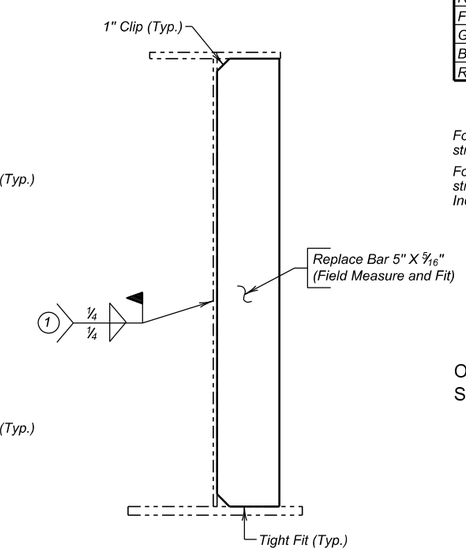

DETAIL "P"

ESTIMATED QUANTITIES

ITEM	UNIT	QUANTITY
Remove and Replace Web and Flange	Each	1
Remove and Replace Transverse Stiffener	Each	4
Field Weld	In	590
Grind Weld	In	5
Breakout Structural Concrete	Cu. Yd.	0.1
Repair Underside of Bridge Deck	Sq. Ft.	1.5

For informational purposes only, the estimated total structural steel quality for " Remove and Replace Web and Flange is 628 lbs

For informational purposes only, the estimated total structural steel quality for " Remove and Replace Transverse Stiffener is 88 lbs, Including plates and diaphragm angles.

GIRDER NO. 1 REPAIR DETAILS (C)

FOR

254' - 0" CONT. COMP. GIRDER BRIDGE

OVER I90 — 0° SKEW

STR. NO. 50-090-165 — SEC. 28/27-T102N-R51W

090 W-288

HL-93

MINNEHAHA COUNTY

S. D. DEPT. OF TRANSPORTATION

AUGUST 2016

DESIGNED BY	CK. DES. BY	DRAFTED BY	
TK	MM	KR	Steve A Johnson BRIDGE ENGINEER
MINNI4GJ	I4GJRA10		

STATE OF	PROJECT	SHEET NO.	TOTAL SHEETS
S.D.	090 W-288	18	28

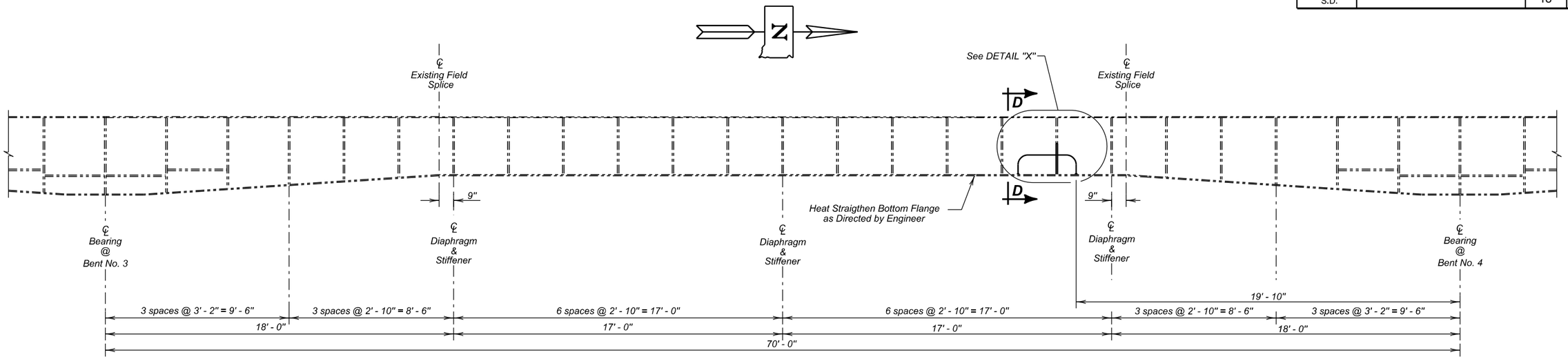

West Face of Girder No. 3

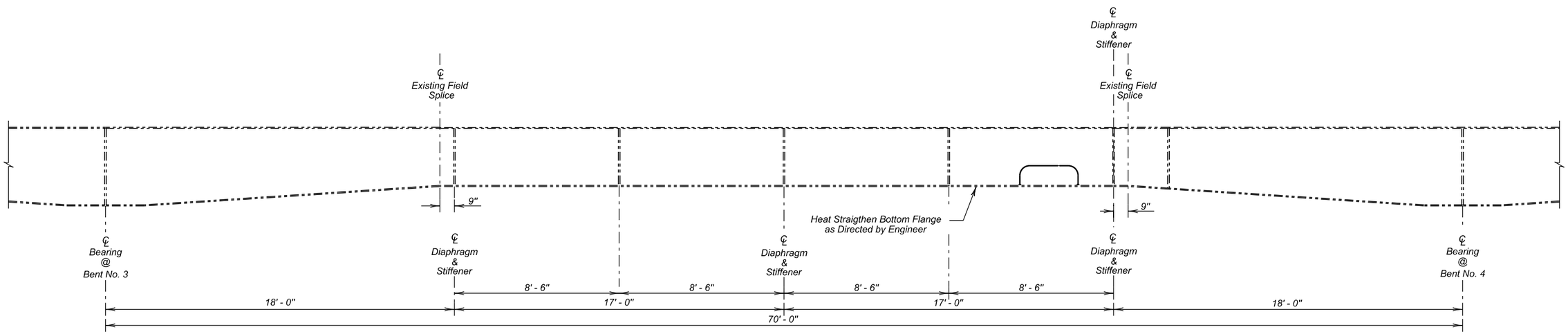

East Face of Girder No. 3

GIRDER NO. 3 REPAIR DETAILS (A)

FOR

254' - 0" CONT. COMP. GIRDER BRIDGE

OVER I90 — 0° SKEW

STR. NO. 50-090-165 — SEC. 28/27-T102N-R51W

090 W-288

HL-93

MINNEHAHA COUNTY

S. D. DEPT. OF TRANSPORTATION

AUGUST 2016

11 OF 21

NOTES:

All stiffeners that are not to be removed and replaced, shall be heat straightened as necessary.
Girder web and bottom flange shall be heat straightened as necessary.

Concrete deck not shown for clarity.

Section D - D is located on Sheet No. 12 of 21.

DESIGNED BY	CK. DES. BY	DRAFTED BY	
TK	MM	KR	Steve A. Johnson
MINNI4GJ	I4GJRA11		BRIDGE ENGINEER

STATE OF	PROJECT	SHEET NO.	TOTAL SHEETS
S.D.	090 W-288	19	28

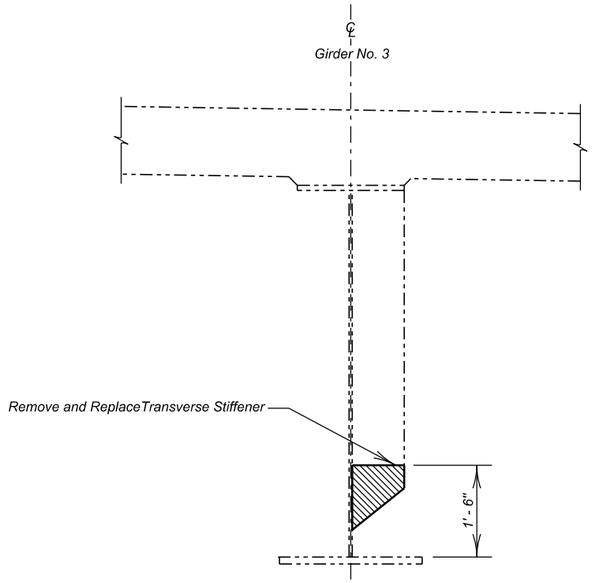

SECTION D - D
(Existing Stiffeners and Web)

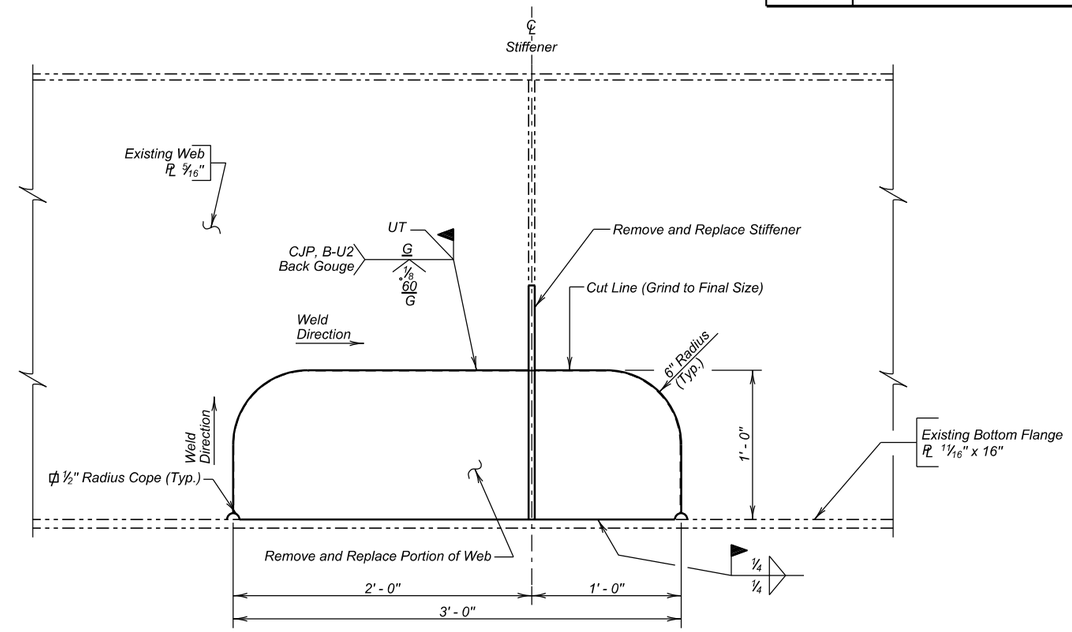

DETAIL "X"

ϕ After the new web section has been welded in place, resize the cope to a 1" radius by grinding the cut surface ensuring the weld tips are ground out. The finished surface shall be smooth.

(1) All fillet welds attaching stiffeners to girder flanges and webs shall terminate 1/2" from edge of stiffener, flange, stiffener clip or cope, which ever is applicable

ESTIMATED QUANTITIES		
ITEM	UNIT	QUANTITY
Remove and Replace Web	Each	1
Remove and Replace Transverse Stiffener	Each	1
Field Weld	In	125

For informational purposes only, the estimated total structural steel quality for Remove and Replace Web is 38 lbs.

For informational purposes only, the estimated total structural steel quality for Remove and Replace Transverse Stiffener is 8 lbs.

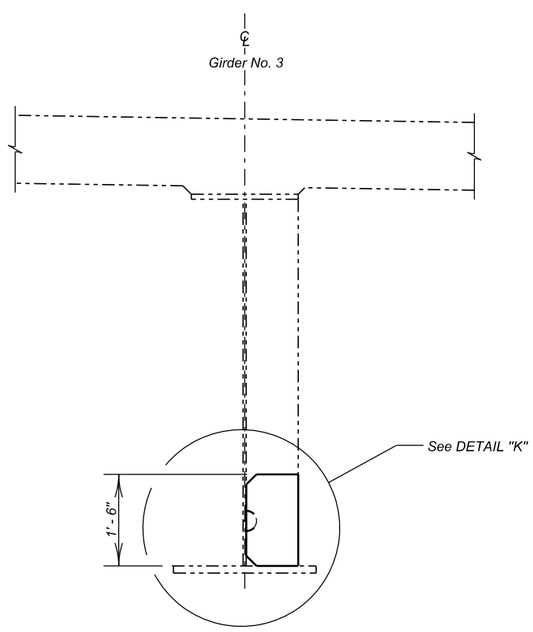

SECTION D - D
(New Stiffener and Web)

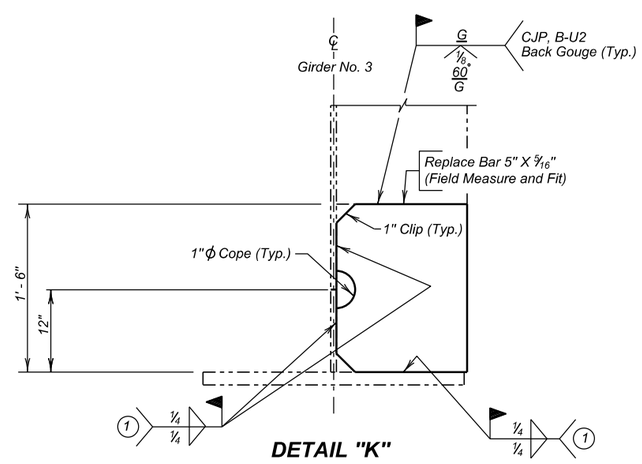

DETAIL "K"

GIRDER NO. 3 REPAIR DETAILS (B)

FOR

254' - 0" CONT. COMP. GIRDER BRIDGE

OVER I90 — 0° SKEW

STR. NO. 50-090-165 — SEC. 28/27-T102N-R51W

090 W-288

HL-93

MINNEHAHA COUNTY

S. D. DEPT. OF TRANSPORTATION

AUGUST 2016

DESIGNED BY	CK. DES. BY	DRAFTED BY	
TK	MM	KR	Steve A Johnson
MINNI4GJ	I4GJRA12		BRIDGE ENGINEER

STATE OF	PROJECT	SHEET NO.	TOTAL SHEETS
S.D.	090 W-288	20	28

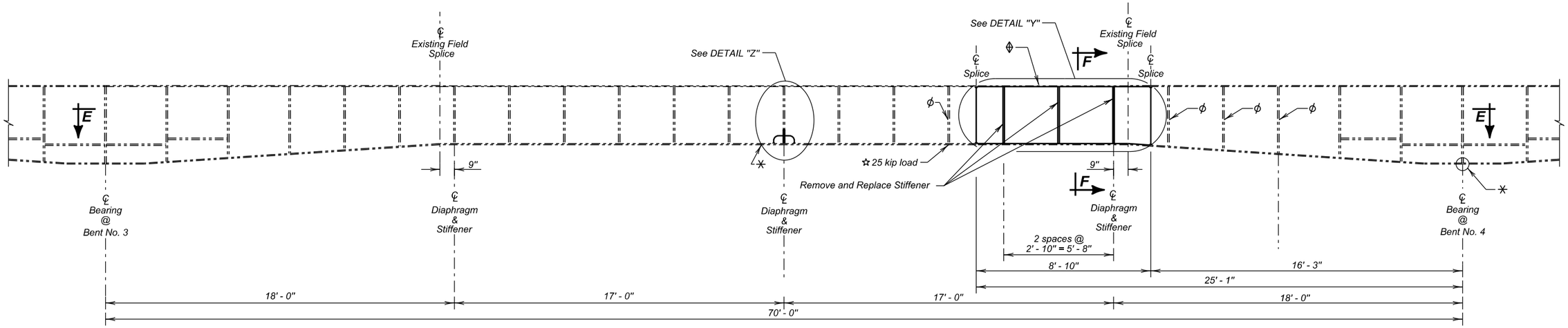

West Face of Girder No. 4

ϕ Heat Straighten Stiffener
☆ Temporary Jacking and Girder Support
Grind and Reweld Stiffener to Web
Repair Underside of Deck
✳ Heat Straighten Bottom Flange

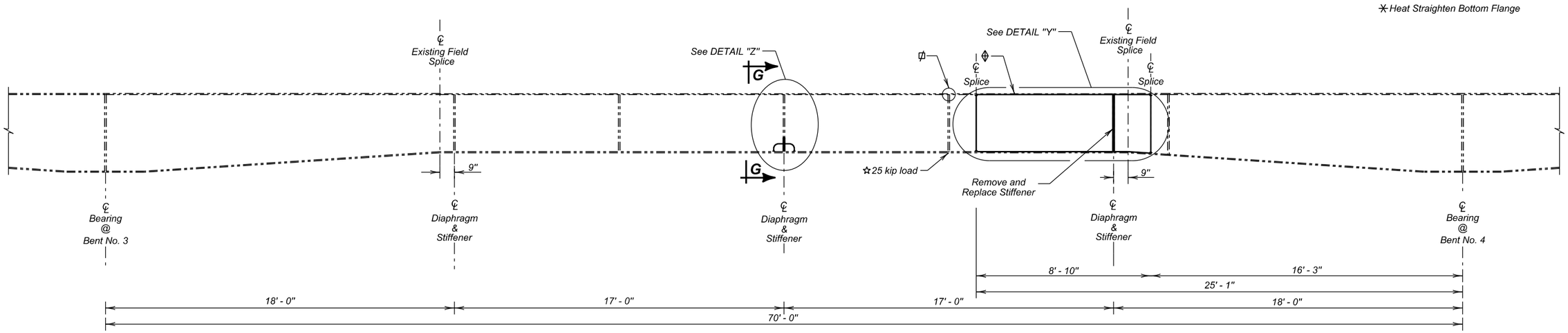

East Face of Girder No. 4

GIRDER NO. 4 REPAIR DETAILS (A)

FOR

254' - 0" CONT. COMP. GIRDER BRIDGE

OVER I90 — 0° SKEW

STR. NO. 50-090-165 — SEC. 28/27-T102N-R51W

090 W-288

HL-93

MINNEHAHA COUNTY

S. D. DEPT. OF TRANSPORTATION

AUGUST 2016

13 OF 21

NOTES:

All stiffeners that are not to be removed and replaced, shall be heat straightened as necessary.
Girder web and bottom flange shall be heat straightened as necessary.

Concrete deck not shown for clarity.

Section E - E is located on Sheet No. 14 of 21.

Section F - F is located on Sheet No. 15 of 21.

Section G - G is located on Sheet No. 16 of 21.

DESIGNED BY	CK. DES. BY	DRAFTED BY	
TK	MM	KR	Steve A Johnson BRIDGE ENGINEER
MINNI4GJ	I4GJRA13		

STATE OF	PROJECT	SHEET NO.	TOTAL SHEETS
S.D.	090 W-288	21	28

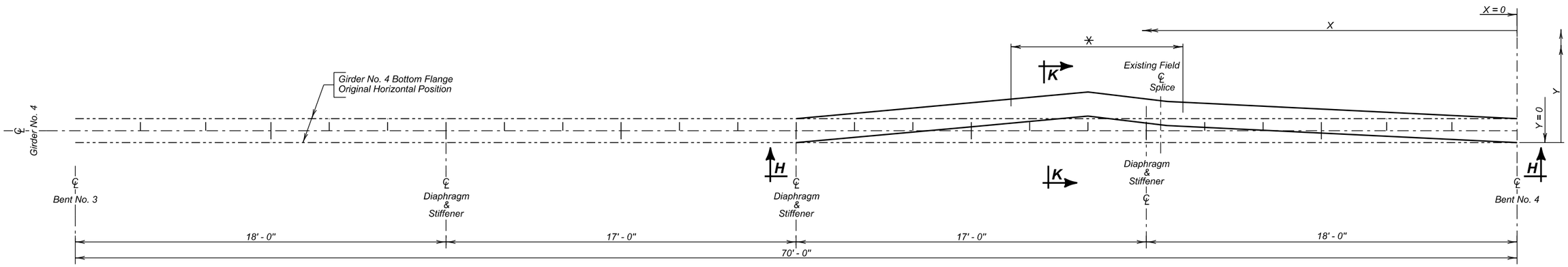

SECTION E - E ~ GIRDER NO. 4 ~ BOTTOM FLANGE

GIRDER NO. 4 HORIZONTAL IMPACT DEFLECTED POSITION MEASUREMENTS

X	Y
0"	0"
17' - 0"	10"
19' - 10"	15 ½"
25' - 6"	9 ¼"
35' - 0"	0"

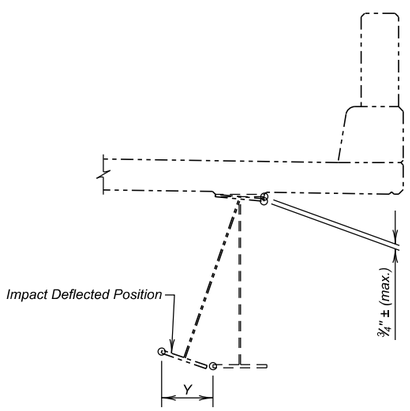

SECTION K - K
(Shown at X measurements)

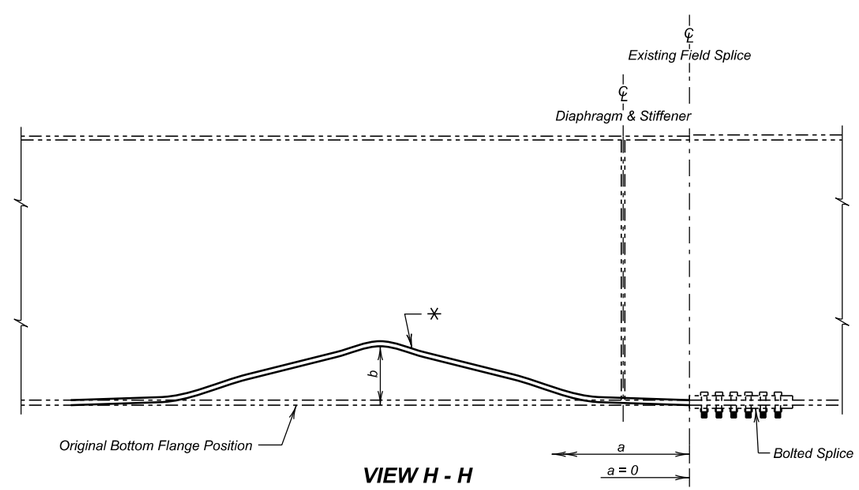

VIEW H - H

GIRDER NO. 4 VERTICAL IMPACT DEFLECTED POSITION MEASUREMENTS

a	b
0"	0"
12"	1 ⅜"
24"	3 ½"
36"	6 ½"
42"	8"
84"	0"

NOTES:

Heat Straighten Girder No. 4 bottom flange, web and stiffeners. See Notes.

✳ Only Minimum Heat Straightening Effort will be Required in Area to be Removed and Replaced

GIRDER NO. 4 REPAIR DETAILS (B)

FOR

254' - 0" CONT. COMP. GIRDER BRIDGE

OVER I90 — 0° SKEW

STR. NO. 50-090-165 — SEC. 28/27-T102N-R51W

090 W-288

HL-93

MINNEHAHA COUNTY

S. D. DEPT. OF TRANSPORTATION

AUGUST 2016

DESIGNED BY	CK. DES. BY	DRAFTED BY	
TK	MM	KR	Steve A Johnson BRIDGE ENGINEER
MINNI4GJ	I4GJRA14		

STATE OF	PROJECT	SHEET NO.	TOTAL SHEETS
S.D.	090 W-288	22	28

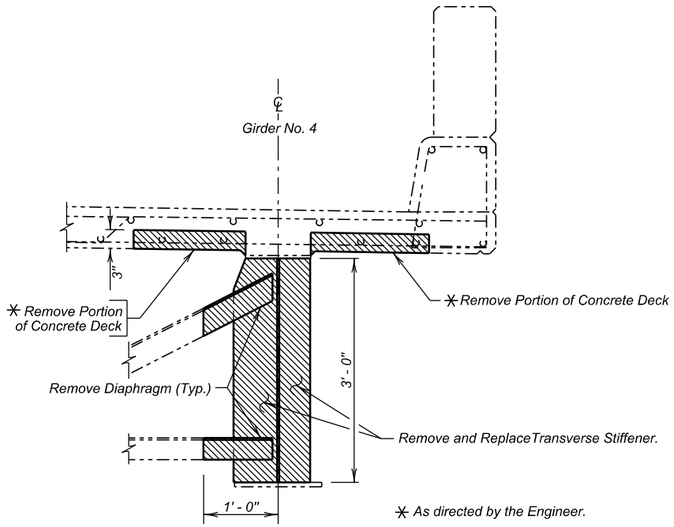

SECTION F - F
(Existing Diaphragm, Stiffeners, Web and Deck)

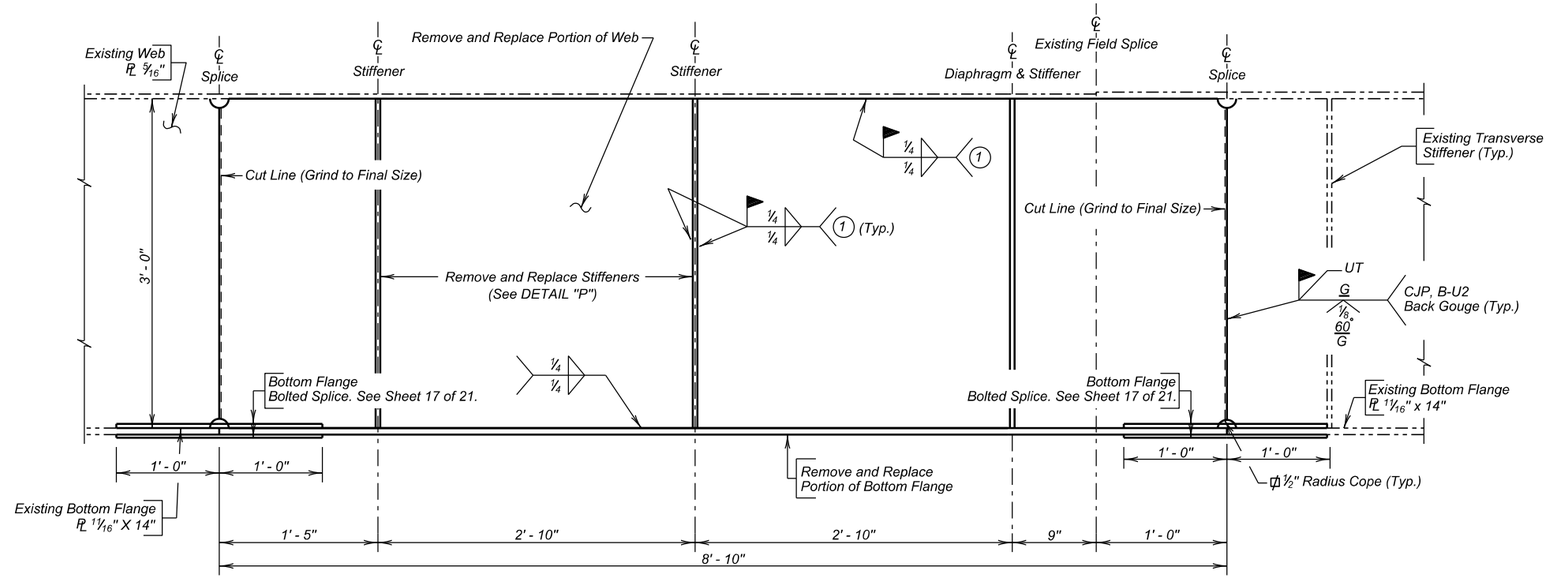

DETAIL "Y"

Ø After the new web section has been welded into place, resize the cope to a 1" radius by grinding the cut surface ensuring the weld tips are ground out. The finished surface shall be smooth.

(1) All fillet welds attaching web to flange and stiffeners to girder flanges and webs shall terminate ½" from edge of stiffener, flange, stiffener clip or cope, whichever is applicable

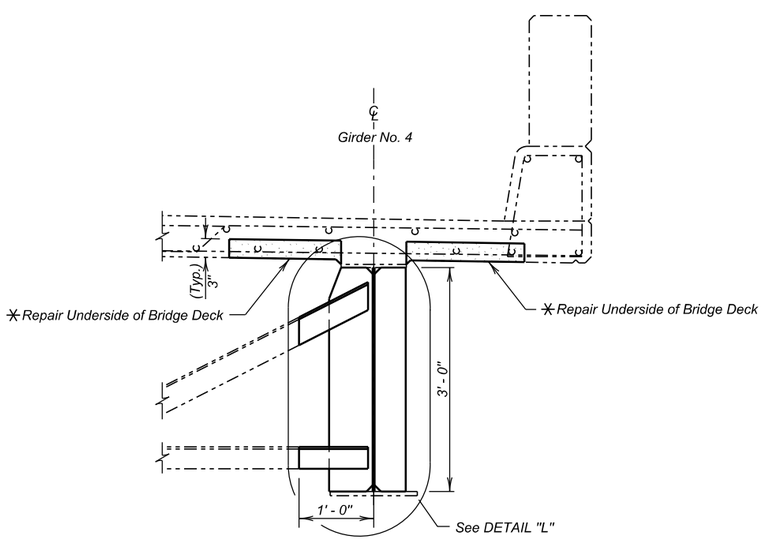

SECTION F - F
(New Stiffeners, Diaphragm, Web and Deck)

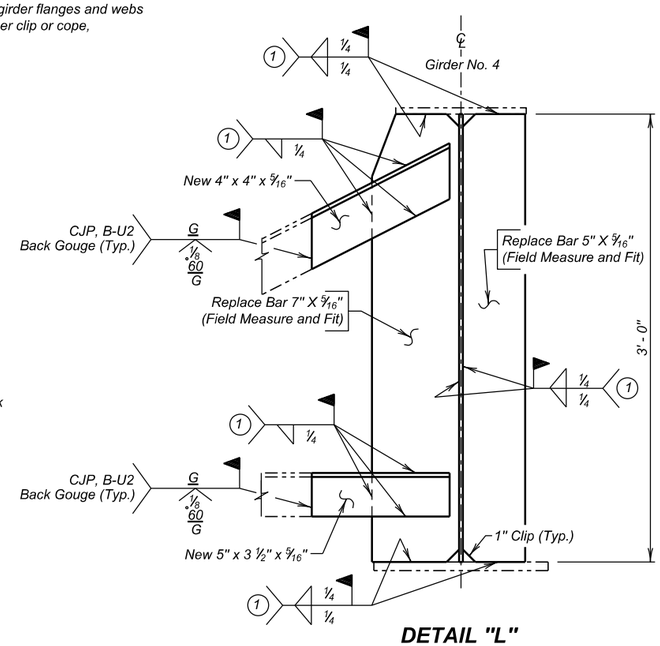

DETAIL "L"
(Deck not Shown for Clarity)

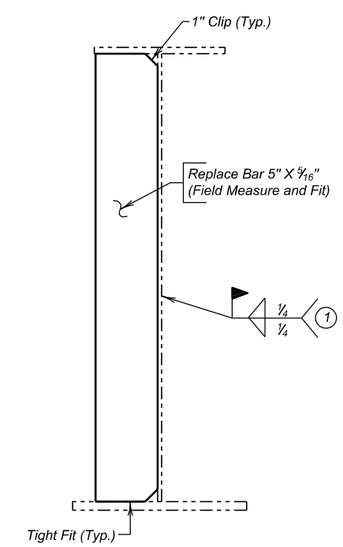

DETAIL "P"

ESTIMATED QUANTITIES

ITEM	UNIT	QUANTITY
Remove and Replace Web and Flange	Each	1
Remove and Replace Transverse Stiffener	Each	4
Field Weld	In	590
Grind Weld	In	4
Breakout Structural Concrete	Cu. Yd.	0.1
Repair Underside of Bridge Deck	Sq. Ft.	1.5

For informational purposes only, the estimated total structural steel quality for " Remove and Replace Web and Flange is 628 lbs

For informational purposes only, the estimated total structural steel quality for " Remove and Replace Transverse Stiffener is 88 lbs, Including plates and diaphram angles.

GIRDER NO. 4 REPAIR DETAILS (C)
FOR
254' - 0" CONT. COMP. GIRDER BRIDGE

OVER I90 — 0° SKEW
STR. NO. 50-090-165 — SEC. 28/27-T102N-R51W
090 W-288
HL-93

MINNEHAHA COUNTY
S. D. DEPT. OF TRANSPORTATION
AUGUST 2016

DESIGNED BY	CK. DES. BY	DRAFTED BY	
TK	MM	KR	Steve A Johnson BRIDGE ENGINEER
MINNI4GJ	I4GJRA15		

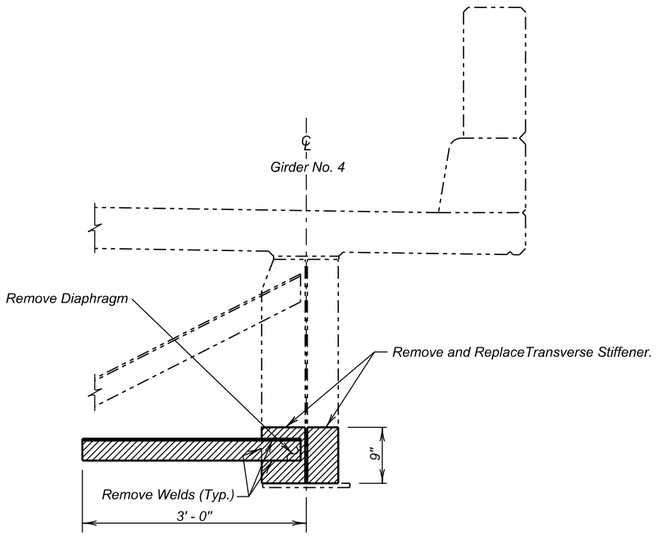

SECTION G - G
(Existing Diaphragm, Stiffeners and Deck)

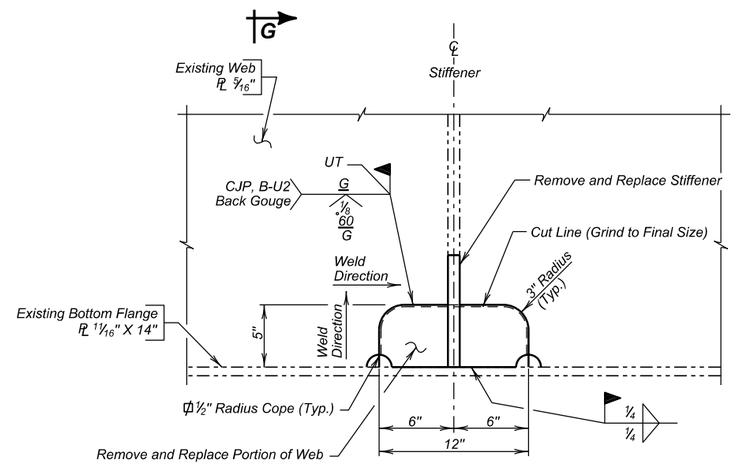

DETAIL "Z"
(Interior View Shown)

ϕ Using the Air Carbon Arc Process, cut the remainder of web section out. After the new web section has been welded into place, resize the cope to a 1" radius by grinding the cut surface ensuring the weld tips are ground out. The finished surface shall be smooth.

(1) All fillet welds attaching stiffeners to girder flanges and webs shall terminate ½" from edge of stiffener, flange, stiffener clip or cope, which ever is applicable

ESTIMATED QUANTITIES

ITEM	UNIT	QUANTITY
Remove and Replace Web	Each	1
Remove and Replace Transverse Stiffener	Each	2
Field Weld	In.	95

For informational purposes only, the estimated total structural steel quality for Remove and Replace Web is 5 lbs.

For informational purposes only, the estimated total structural steel quality for Remove and Replace Transverse Stiffener is 19 lbs.

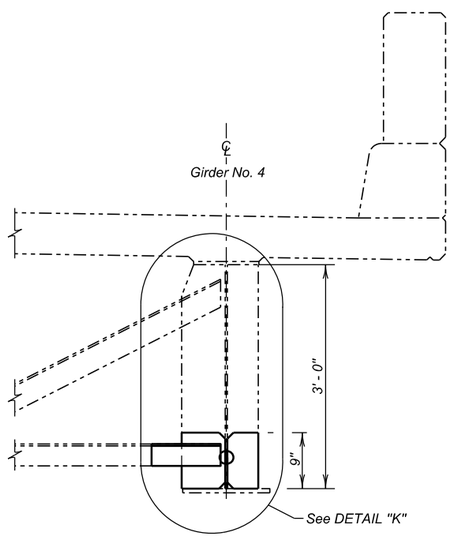

SECTION G - G
(New Stiffeners, Diaphragm and Web)

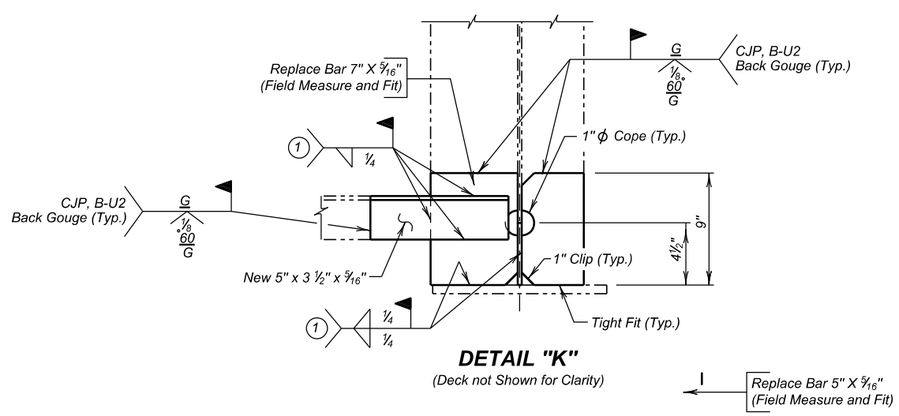

DETAIL "K"
(Deck not Shown for Clarity)

GIRDER NO. 4 REPAIR DETAILS (D)
FOR
254' - 0" CONT. COMP. GIRDER BRIDGE
OVER I90 — 0° SKEW
STR. NO. 50-090-165 — SEC. 28/27-T102N-R51W
090 W-288
HL-93

MINNEHAHA COUNTY
S. D. DEPT. OF TRANSPORTATION
AUGUST 2016

DESIGNED BY	CK. DES. BY	DRAFTED BY	
TK	MM	KR	Steve A Johnson BRIDGE ENGINEER
MINNI4GJ	I4GJRA16		

STATE OF	PROJECT	SHEET NO.	TOTAL SHEETS
S.D.	090 W-288	24	28

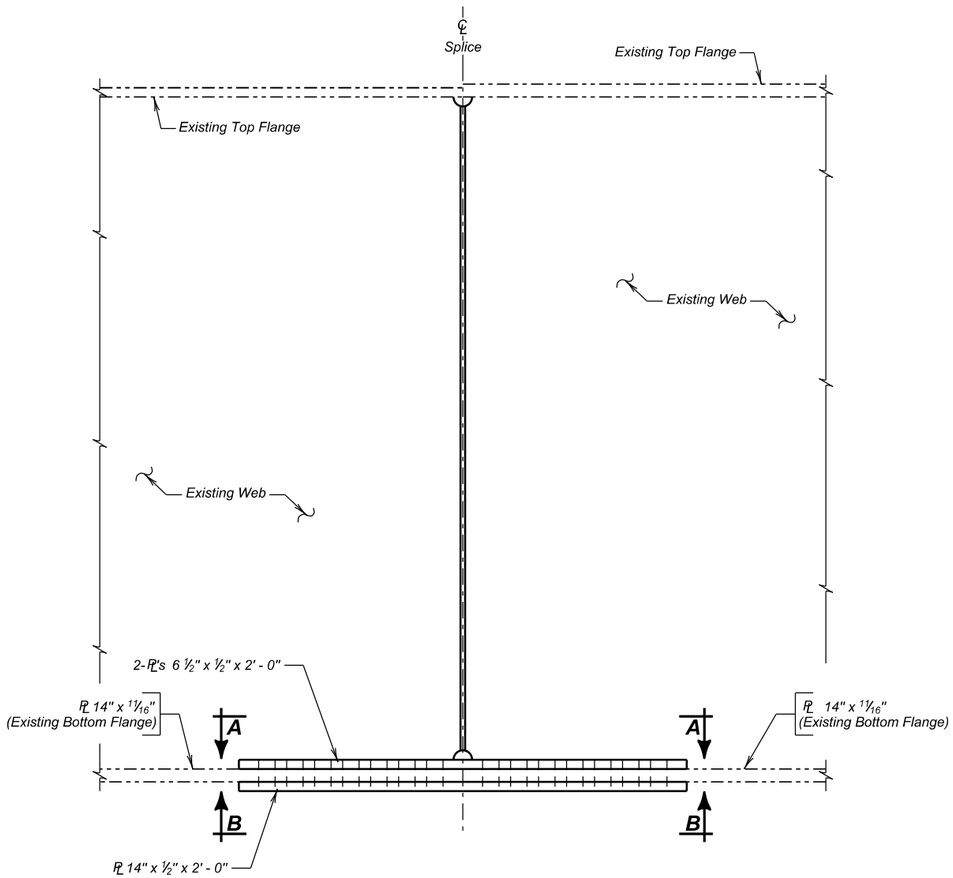

ELEVATION ~ EXTERIOR GIRDER

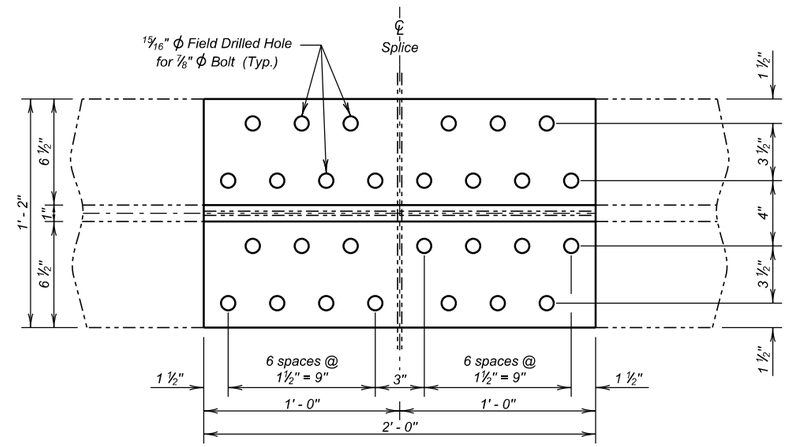

VIEW A - A

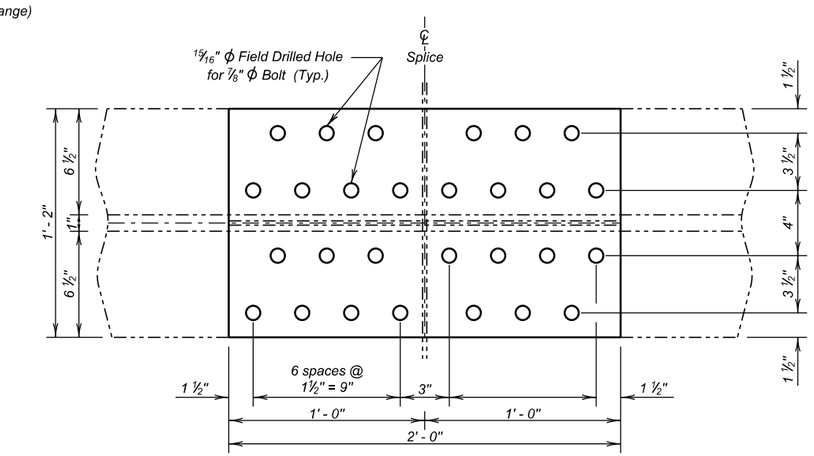

VIEW B - B

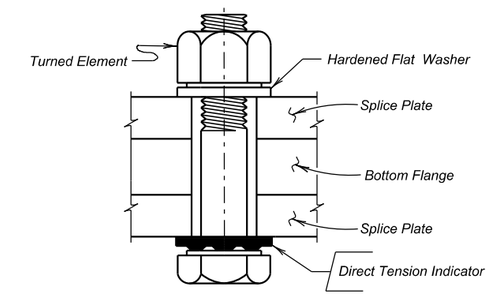

DIRECT TENSION INDICATOR DETAIL

NOTES:

All Bolts shall be ⅞" ϕ A325 High Strength Bolts. See Direct Tension indicator Details on this sheet.

For informational purposes only, the estimated total structural steel quality for Bolted Field Splice including plates, bolts, nuts and washers is 124 lbs each.

BOLTED SPLICE REPAIR DETAILS
FOR
254' - 0" CONT. COMP. GIRDER BRIDGE

OVER I90 — 0° SKEW
STR. NO. 50-090-165 — SEC. 28/27-T102N-R51W
090 W-288
HL-93

MINNEHAHA COUNTY
S. D. DEPT. OF TRANSPORTATION
AUGUST 2016

DESIGNED BY	CK. DES. BY	DRAFTED BY	
TK	MM	KR	Steve A. Johnson
MINNI4GJ	I4GJRA17		BRIDGE ENGINEER

-X771-

STATE OF	PROJECT	SHEET NO.	TOTAL SHEETS
S.D.	090 W 288	25	28

INDEX OF BRIDGE SHEETS—

NOTE —
T.S.&C. El. = Top of Slab at Curb Elevation
T.S.&℄ El. = Top of Slab at ℄ Roadway Elevation

B.M. No. 69 - El. 1601.39
R.R. Spk. in P. Pole
545' Lt. Sta. 551+48 M.L.

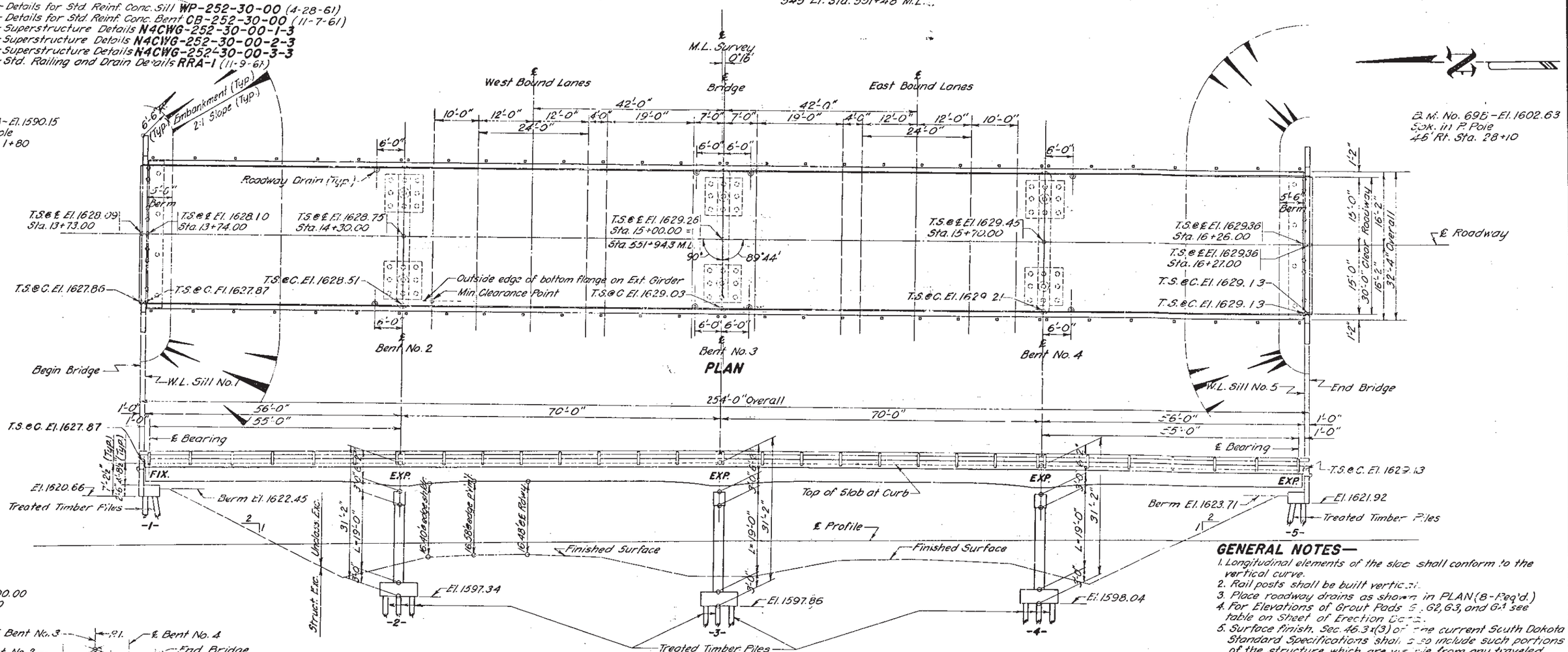

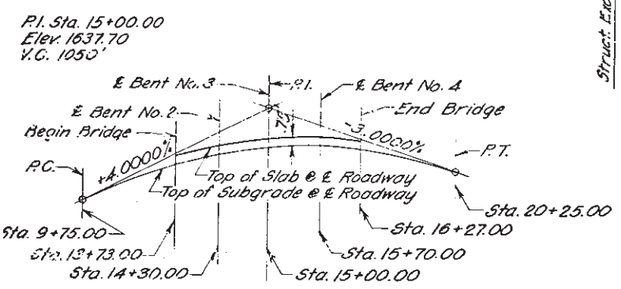

SUBGRADE CURVE DATA

ESTIMATED QUANTITIES

ITEM	El. "A" Concrete Cu. Yds.	Steel Reinf. Lbs.	Steel Struct. Lbs.	Type-A Steel Railing Lin. Ft.	Timber Piling Lin. Ft. / Cu. Yds. Timber	Excavation Cu. Yds. Unclass.	Excavation Cu. Yds. Struct.	Backfill Cu. Yds.
Superstr. 28'-0" Cont. Comp. Unit	91.8	33,415	82,790	510.3				
Substr. Sill No. 1	27.6	2,090	820		11@30'=330	10@33'=330	20	20
Substr. Bent No. 2	29.3	6,915			17@10'=170	10@15'=150	70	
Substr. Bent No. 3	29.3	6,915			17@10'=170	10@15'=150	50	
Substr. Bent No. 4	29.3	6,915			17@10'=170	10@15'=150	65	
Substr. Sill No. 5	27.6	2,090	505		11@30'=330	10@40'=400	20	
Totals	1,834.9	84,400	134,118	1510.3	1,265	1,120	226	

♦ One Treated Timber Test Pile shall be driven at Sills No. 1 and No. 5 and at Bents No. 2, 3, and 4 before the remaining piles are ordered.
A See Grading Plans for Unclassified Excavation.
PILE NOTE:- Piles driven at Sills No. 1 and 5, including test piles, shall obtain their full bearing (24 tons) in the natural ground below the new embankments, elevations 1609.5± and 1613.5± respectively. Pre-bored holes thru the rill are required, and shall have a minimum diameter 2" larger than the nominal diameter (3' from the butt) of the pile.

F.C. 8-16-61
R.D.

GENERAL NOTES—

1. Longitudinal elements of the slab shall conform to the vertical curve.
2. Rail posts shall be built vertical.
3. Place roadway drains as shown in PLAN (8-Req'd.)
4. For Elevations of Grout Pads G.2, G.3, and G.4 see table on Sheet of Erection Data.
5. Surface finish, Sec. 46.3x(3) of the current South Dakota Standard Specifications shall also include such portions of the structure which are visible from any traveled lane.

SPECIFICATION NOTE—

Use current South Dakota Standard Specifications for Roads and Bridges and the Supplemental Specifications as included in the proposal.

ORIGINAL CONSTRUCTION PLANS

GENERAL DRAWING AND QUANTITIES
FOR
254'-0" CONT. COMP. GIRDER VIADUCT
30'-0" ROADWAY

OVER I.S. NO. 90 STA. 551+94.3 SEC. 28/27-T102N-R51W
STA. 13+73.00 TO 16+27.00 I 90-9(12)381
MINNEHAHA COUNTY
SOUTH DAKOTA H20-S16-44
DEPARTMENT OF HIGHWAYS
AUG. 1961 (18) OF (21)

-X771-

DESIGNED BY	DRAWN BY	CHECKED BY	APPROVED
	D.C.S.	R.C.M. 8-19	BRIDGE ENGINEER

Group III

STATE OF	PROJECT	SHEET NO.	TOTAL SHEETS
S.D.	090 W 288	26	28

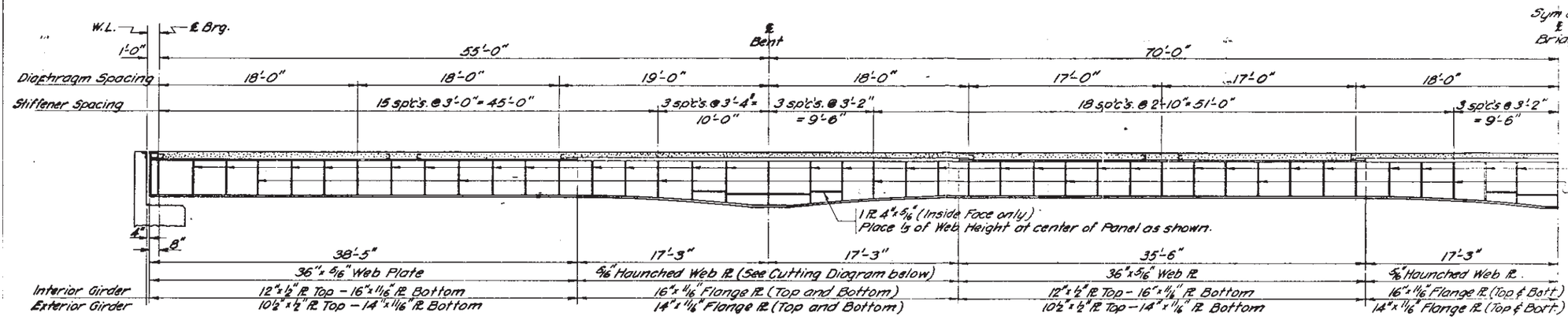

GIRDER LAYOUT

NOTE: When stiffener plates are used on one side only they shall be attached to the outstanding leg of the compression flange as shown in Detail "Y".

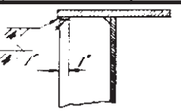

DETAIL "Y"

Bottom Flange shall be considered compression flange at haunched section between field splices. Top flange shall be considered compression flange in all other sections.

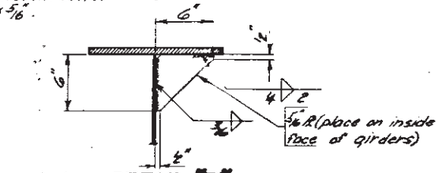

DETAIL "D"

(Typical @ Top & Bottom Flange)

NOTE:- Other transverse stiffeners are as noted in Sections below and as detailed on Rdwy. Section.

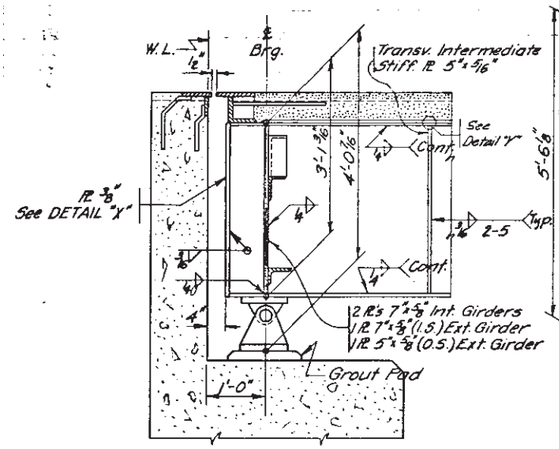

SILL SECTION FIXED SHOE

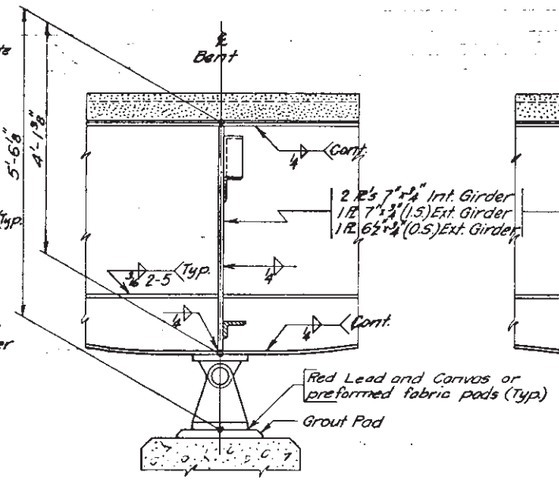

BENT SECTION FIXED SHOE

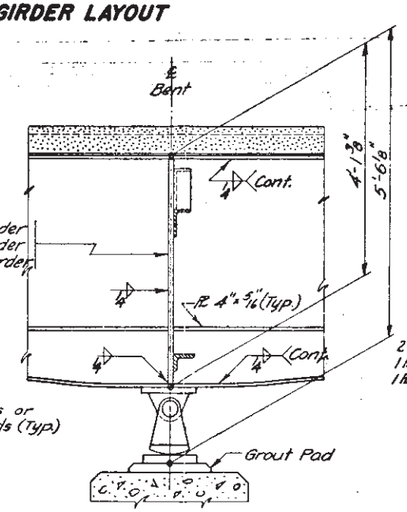

BENT SECTION ROCKER SHOE

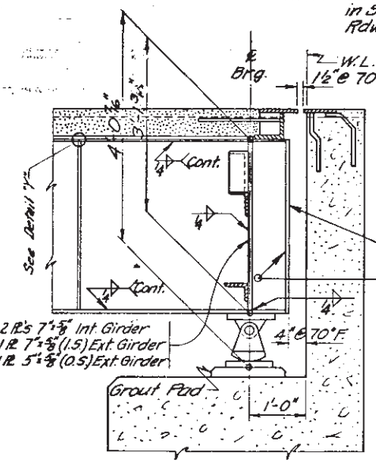

SILL SECTION ROCKER SHOE

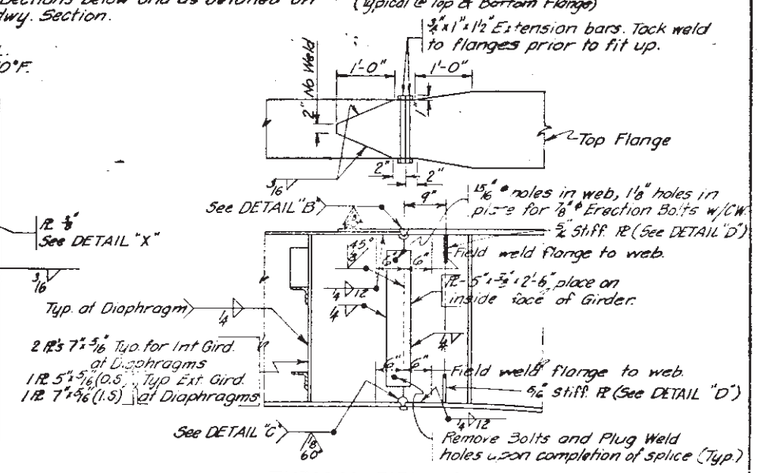

TYPICAL FIELD SPLICE

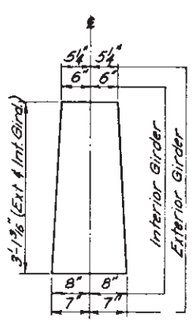

DETAIL "X"

END PLATE

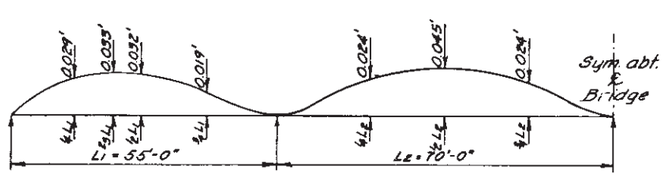

D.L. DEFLECTION DIAGRAM

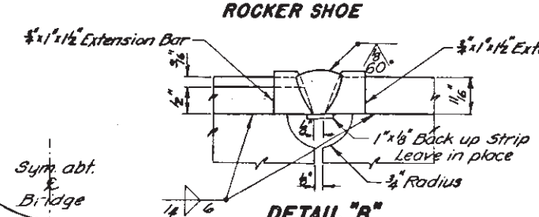

DETAIL "B"

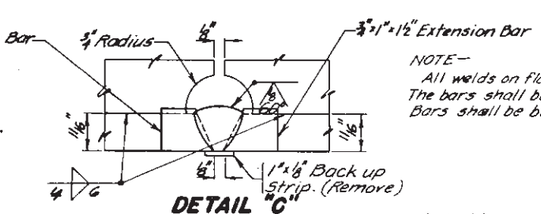

DETAIL "C"

NOTE—
All welds on flange shall start and stop on Extension Bars. The bars shall be of mild steel. After weld is completed, Extension Bars shall be burned off flush.

NOTE—
The D.L. Deflection Diagram shown shall be used to determine the depth of haunch required at interior Points. Elevations at top of Girders shall be established after the Girders, with diaphragms, have been erected and welded, but prior to pouring of Slab. Girders shall not be supported by construction shoring while elevations are established. The depth of haunch required at any interior point equals (=) the proposed top of slab minus (-) the elevation of top of Girder, minus (-) slab thickness (6 3/4") plus (+) Dead Load Deflection.

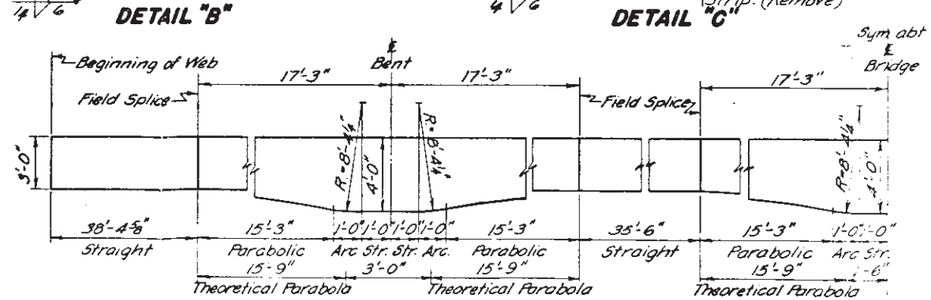

WEB CUTTING DIAGRAM

ORIGINAL CONSTRUCTION PLANS

SUPERSTRUCTURE DETAILS

FOR

STANDARD 252'-0" CONTINUOUS WELDED PLATE GIRDER UNIT

COMPOSITE SECTION

30'-0" ROADWAY **4 SPAN UNIT**

SOUTH DAKOTA (19) OF (21)

DEPARTMENT OF HIGHWAYS

AUG. 1961 H20-S16-44

STATE OF	PROJECT	SHEET NO.	TOTAL SHEETS
S.D.	090 W 288	27	28

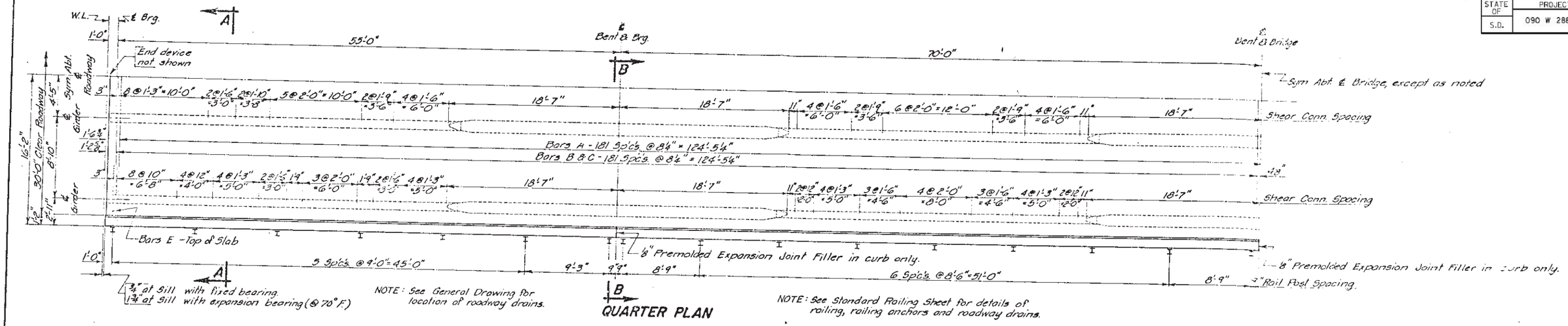

QUARTER PLAN

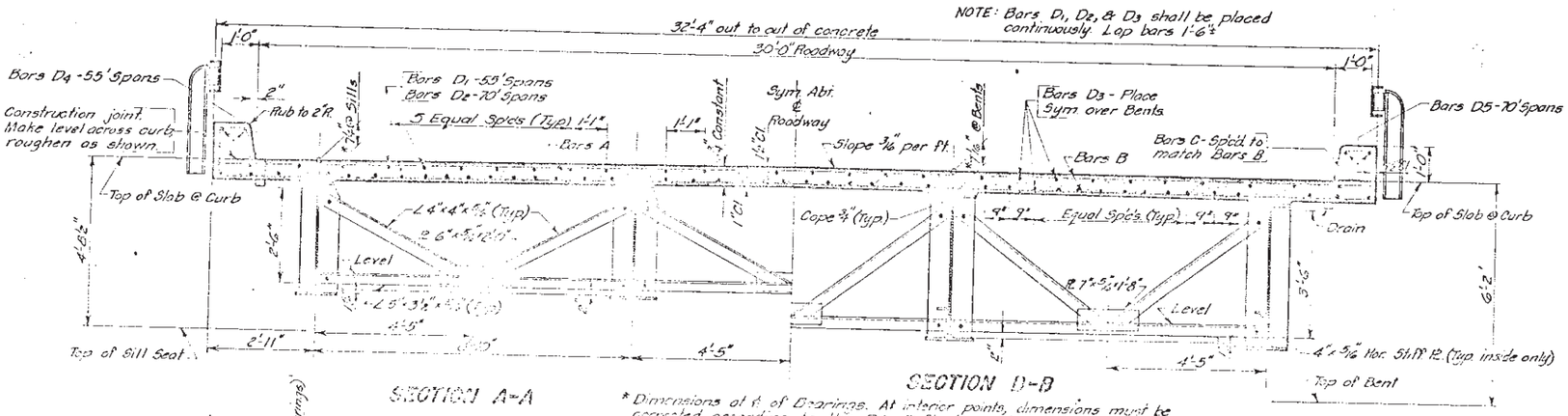

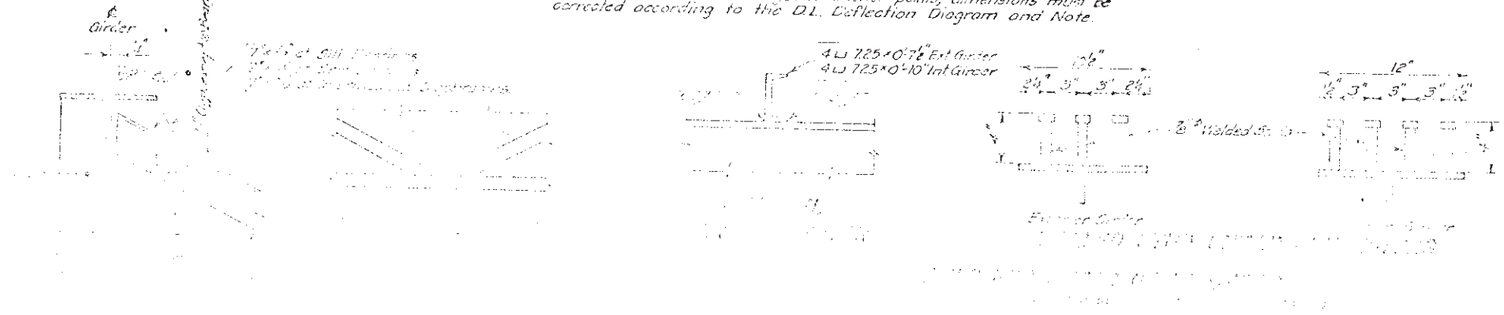

REINFORCING SCHEDULE

Mk.	No.	Size	Length	Type
A	363	5	33'-0"	12
B	728	5	30'-0"	21
C	728	4	5'-3"	71
D1	140	5	[illegible]	[illegible]
D2	140	5	33'-0"	[illegible]
D3	210	5	[illegible]	[illegible]
D4	16	5	[illegible]	[illegible]
D5	16	5	[illegible]	[illegible]
E	8	6	[illegible]	[illegible]

NOTE: All dimensions [illegible]

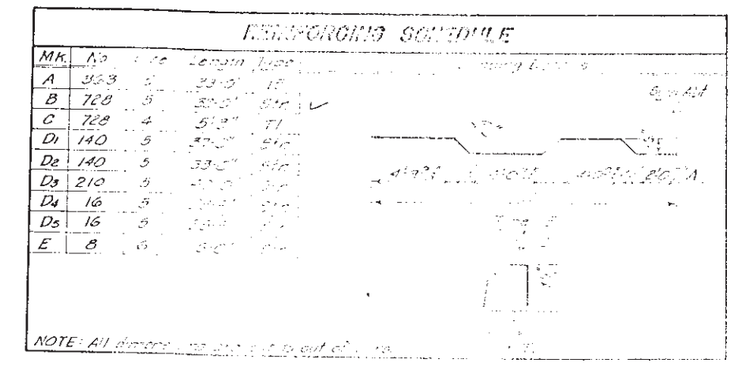

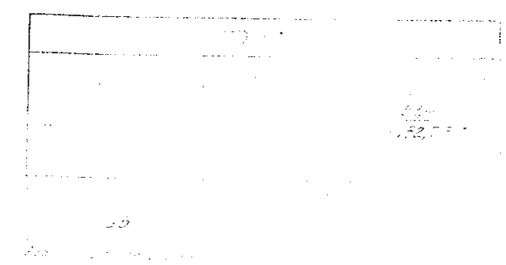

ORIGINAL CONSTRUCTION PLANS

STATE OF	PROJECT	SHEET NO.	TOTAL SHEETS
S.D.	090 W 288	28	28

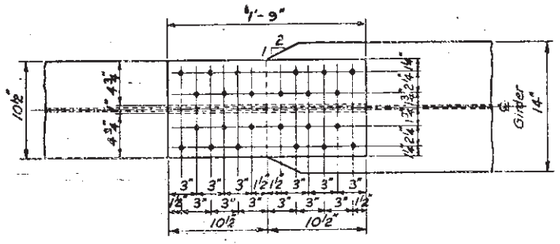

TOP VIEW

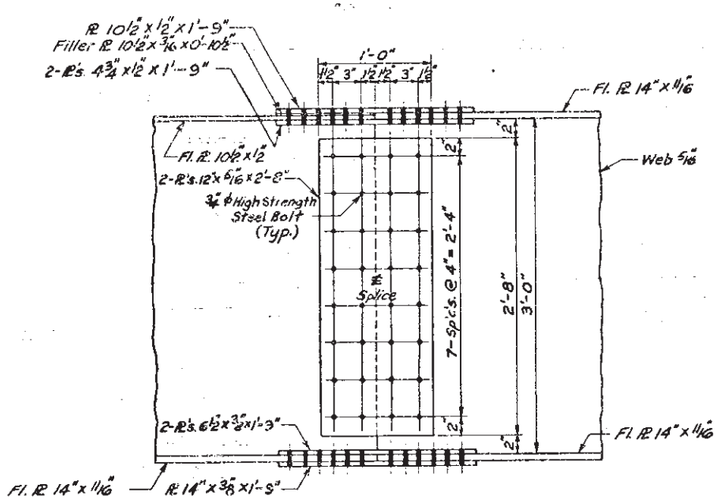

ELEVATION OF SPLICE

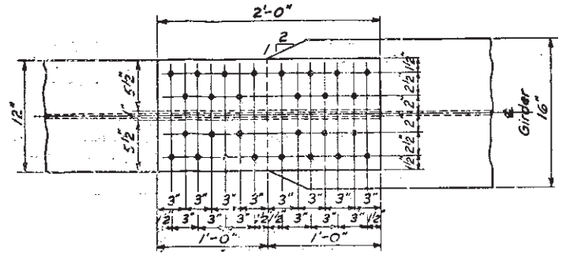

TOP VIEW

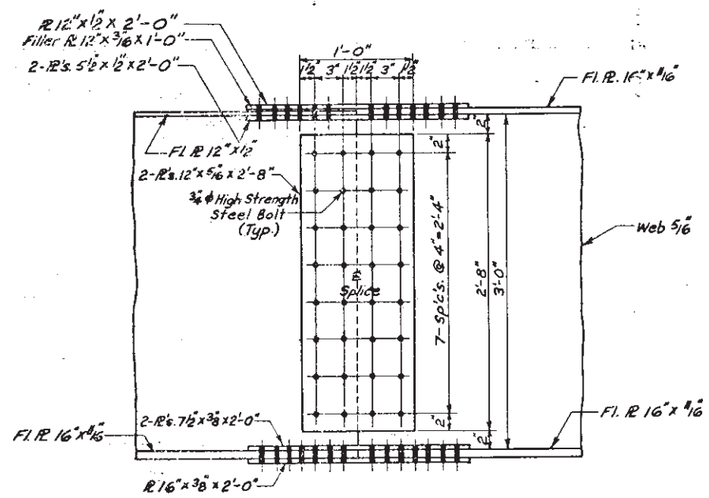

ELEVATION OF SPLICE

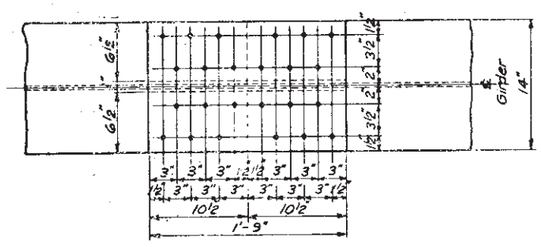

BOTTOM VIEW

TYPICAL BOLTED SPLICE
EXTERIOR GIRDER

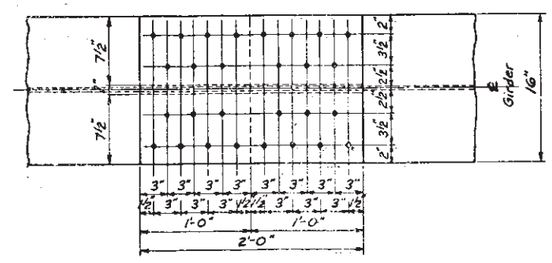

BOTTOM VIEW

TYPICAL BOLTED SPLICE
INTERIOR GIRDER

GENERAL NOTES—

1. All bolts shall be ¾ φ high-strength (A.S.T.M. A325) with two hardened washers.
2. Holes for ¾" φ high-strength bolts shall be subpunched reamed and splice plates match-marked after assembling as provided in Section 41.3 of South Dakota Standard Specifications for Roads and Bridges.
3. Steel for splice plates and fill plates shall conform to A.S.T.M. A7 structural carbon steel, or A.S.T.M. A373 steel for welding.
4. ¾" φ high-strength bolts shall be tightened to a minimum tension of 28,400 lbs. Tightening shall be done with properly calibrated wrenches or by the "turn-of-nut" method as provided in Section 4<3 nnn of South Dakota Standard Specifications for Roads and Bridges.
5. All bolts in flange splices shall be placed with head down.
6. Bolts in web splices of exterior girders shall be placed with heads on exterior face of girders.
7. Triangular plates shown welded to flange and web near girder ends at welded splices shall be omitted when bolted splices are used.
8. Clip ends of intermediate stiffeners, if necessary, to clear flange splice plates.
9. If an intermediate stiffener is located in area of web splice plate, the intermediate stiffener may be shifted to clear.
10. If shear connectors are located in area of flange splice plates, shear connectors may be shifted and re-spaced to clear.
11. Any re-spacing or shifting of intermediate stiffeners and/or shear connectors shall be noted on the shop Plans for approval by the ENGINEER.
12. When the Contractor elects to use the alternate bolted splice, the weight of necessary bolts and plates will not be measured for payment. See Special Provisions.

ORIGINAL CONSTRUCTION PLANS

DETAILS OF BOLTED FIELD SPLICE
FOR
STANDARD 252'-0" CONTINUOUS
WELDED PLATE GIRDER UNIT
COMPOSITE SECTION

30'-0" ROADWAY — 4-SPAN UNIT
SOUTH DAKOTA — H20-S16-44
DEPARTMENT OF HIGHWAYS
SEPTEMBER 1962 — 21 OF 21

DESIGNED BY	DRAWN BY	CHECKED BY	APPROVED
	JMM		

0 3-252-30-13