GUARDRAIL REPAIR
000P-251, 000I-252 & 000I-253
AURORA, BRULE, BUFFALO, CHARLES MIX, DAVISON, DOUGLAS, GREGORY, HANSON, HUTCHINSON, JERAULD, LYMAN, MCCOOK, MINER & SANBORN COUNTIES
PCN I6VY, I6W0 & I6W1

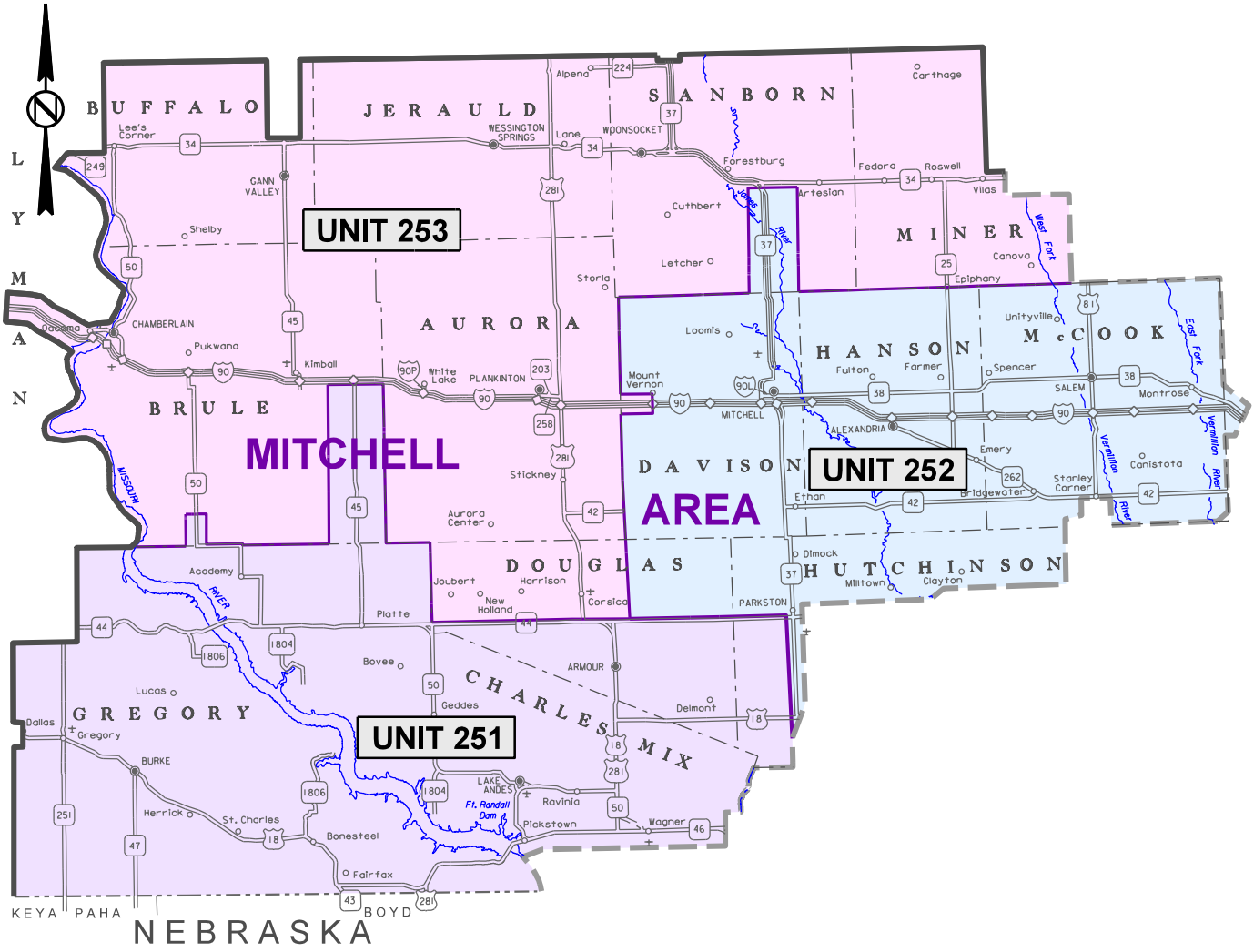

INDEX OF SHEETS

Sheet 1	Layout Map
Sheet 2	Index of Sheets
Sheets 3 & 4	Estimate of Quantities
Sheets 5 - 7	Environmental Commitments
Sheets 8 - 12	Plan Notes
Sheets 12 - 22	Traffic Control
Sheets 23 - 34	Standard Plates for Cable Guardrail
Sheets 35 - 110	Standard Plates for Beam Guardrail
Sheets 111 & 112	Details for Rubrail
Sheet 113	Details for Median Guardrail
Sheets 114 - 117	Standard Plates for Guardrail Delineation

000P-251, 000I-252 & 000I-253 - GUARDRAIL REPAIR
AURORA, BRULE, BUFFALO, CHARLES MIX, DAVISON, DOUGLAS, GREGORY, HANSON, HUTCHINSON, JERAULD, LYMAN, McCOOK, MINER & SANBORN COUNTIES

ESTIMATE OF QUANTITIES

BID ITEM NUMBER	ITEM		000P-251 PCN I6VY QUANTITY	000I-252 PCN I6W0 QUANTITY	000I-253 PCN I6W1 QUANTITY	TOTAL QUANTITY	UNIT
009E0197	Mobilization 1	*(Unit 251)*	5	-	-	5	Each
009E0198	Mobilization 2	*(Unit 252)*	-	10	-	10	Each
009E0199	Mobilization 3	*(Unit 253)*	-	-	10	10	Each
628E1500	Concrete Barrier End Protection		<---------- 1 ---------->			1	Each
628E1500	Concrete Barrier End Protection	*(Mash)*	<---------- 1 ---------->			1	Each
628E1520	Refurbish Concrete Barrier End Protection		<---------- 1 ---------->			1	Each
629E0100	3 Cable Guardrail		<---------- 20 ---------->			20	Ft
629E0210	Reset High Tension 3 Cable Guardrail		<---------- 5 ---------->			5	Ft
629E0211	Reset High Tension 4 Cable Guardrail		<---------- 1000 ---------->			1000	Ft
629E0222	Reset High Tension Cable Guardrail Sleeve		<---------- 30 ---------->			30	Each
629E0300	3 Cable Guardrail Slip Base Anchor Assembly		<---------- 1 ---------->			1	Each
629E0400	3 Cable Guardrail Anchor Assembly		<---------- 1 ---------->			1	Each
629E0450	Retension 3 Cable Guardrail		4	8	8	20	Each
629E0453	Retension High Tension 3 Cable Guardrail		<---------- 10 ---------->			10	Ft
629E0454	Retension High Tension 4 Cable Guardrail		<---------- 500 ---------->			500	Ft
629E1000	Repair 3 Cable Guardrail		500	750	750	2000	Ft
629E1010	Repair 3 Cable Guardrail Slip Base Anchor Assembly		<---------- 1 ---------->			1	Each
629E1100	3 Cable Guardrail End Post	*(I Beam)*	1	2	2	5	Each
629E1102	3 Cable Guardrail Intermediate Post	*(Flanged)*	30	30	30	90	Each
629E1102	3 Cable Guardrail Intermediate Post	*(I Beam)*	10	15	15	40	Each
629E1103	3 Cable Guardrail Slip Base Anchor Post		1	2	2	5	Each
629E1104	3 Cable Guardrail Post, Winter		15	20	20	55	Each
629E1106	Drive Down 3 Cable Guardrail Post		5	5	5	15	Each
629E1108	Reset 3 Cable Guardrail Post		10	15	15	40	Each
629E1110	Cable Anchor Bracket		<---------- 1 ---------->			1	Each
629E1112	Cable Splice		1	1	1	3	Each
629E1114	3 Cable Guardrail J Hook Bolt		100	200	200	500	Each
629E1116	Steel Turnbuckle Cable End Assembly		2	5	5	12	Each
629E1118	Spring Cable End Assembly with Turnbuckle		2	2	2	6	Each
629E1120	W Beam to 3 Cable Transition Bracket		2	2	2	6	Each
629E1122	3 Cable Guardrail End Post Cap		2	2	2	6	Each
629E1143	High Tension 3 Cable Guardrail Post		<---------- 1 ---------->			1	Each
629E1144	High Tension 4 Cable Guardrail Post		<---------- 30 ---------->			30	Each
629E1158	High Tension 3 Cable Guardrail Post and Sleeve		<---------- 1 ---------->			1	Each
629E1159	High Tension 4 Cable Guardrail Post and Sleeve		<---------- 30 ---------->			30	Each
629E1163	High Tension 3 Cable Guardrail Sleeve		<---------- 1 ---------->			1	Each
629E1164	High Tension 4 Cable Guardrail Sleeve		<---------- 3 ---------->			3	Each
629E1170	High Tension Cable Guardrail Terminal Post		<---------- 8 ---------->			8	Each
629E1172	High Tension Cable Guardrail Terminal Cable Release Post		<---------- 8 ---------->			8	Each
629E9070	Reflective Crossover PVC Pipe		<---------- 3 ---------->			3	Each
630E0200	Straight Class A Thrie Beam Rail	*(12 Gauge)*	12.5	12.5	12.5	37.5	Ft
630E0210	Straight Class B Thrie Beam Rail	*(10 Gauge)*	<---------- 12.5 ---------->			12.5	Ft
630E0500	Type 1 MGS		<---------- 50 ---------->			50	Ft
630E0513	Type 1C MGS		<---------- 12.5 ---------->			12.5	Ft
630E0520	Type 2 MGS		<---------- 25 ---------->			25	Ft
630E0530	Type 3 MGS		<---------- 12.5 ---------->			12.5	Ft
630E0540	Type 4 MGS		<---------- 12.5 ---------->			12.5	Ft
630E1005	18'-9" Longspan MGS		<---------- 1 ---------->			1	Each
630E1006	25'-0" Longspan MGS		<---------- 1 ---------->			1	Each
630E1200	Straight Class A W Beam Rail	*(12 Gauge)*	150	175	175	500	Ft
630E1210	Straight Class B W Beam Rail	*(10 Gauge)*	<---------- 12.5 ---------->			12.5	Ft
630E1500	Type 1 Guardrail Transition		<---------- 1 ---------->			1	Each

000P-251, 000I-252 & 000I-253 - GUARDRAIL REPAIR
AURORA, BRULE, BUFFALO, CHARLES MIX, DAVISON, DOUGLAS, GREGORY, HANSON, HUTCHINSON, JERAULD, LYMAN, McCOOK, MINER & SANBORN COUNTIES

ESTIMATE OF QUANTITIES

BID ITEM NUMBER	ITEM	000P-251 PCN I6VY QUANTITY	000I-252 PCN I6W0 QUANTITY	000I-253 PCN I6W1 QUANTITY	TOTAL QUANTITY	UNIT
630E1501	Type 1 Retrofit Guardrail Transition	<---------- 1 ---------->			1	Each
630E1505	Type 2A Guardrail Transition	<---------- 1 ---------->			1	Each
630E1510	Type 3 Guardrail Transition	<---------- 1 ---------->			1	Each
630E2000	W Beam to Thrie Beam Guardrail Transition	<---------- 2 ---------->			2	Each
630E2001	Assymetrical W Beam to Thrie Beam Guardrail Transition	<---------- 1 ---------->			1	Each
630E2008	W Beam Slotted Rail for High Tension Cable Connection	<---------- 25 ---------->			25	Ft
630E2015	W Beam Guardrail Flared End Terminal	<---------- 1 ---------->			1	Each
630E2016	MGS Flared End Terminal	<---------- 1 ---------->			1	Each
630E2017	MGS Mash Flared End Terminal	<---------- 1 ---------->			1	Each
630E2018	MGS Mash Tangent End Terminal	<---------- 1 ---------->			1	Each
630E2019	MGS Tangent End Terminal	<---------- 1 ---------->			1	Each
630E2020	W Beam Guardrail Tangent End Terminal	<---------- 1 ---------->			1	Each
630E2030	W Beam Guardrail Breakaway Cable Terminal	<---------- 2 ---------->			2	Each
630E2050	Beam Guardrail Trailing End Terminal *(W or Thrie)*	<---------- 1 ---------->			1	Each
630E2065	MGS Trailing End Terminal	<---------- 1 ---------->			1	Each
630E2100	Beam Guardrail Post	2	2	2	6	Each
630E2105	Beam Guardrail Block	2	2	2	6	Each
630E2110	Beam Guardrail Post and Block	10	15	15	40	Each
630E2120	Beam Guardrail Post and Block, Winter	6	7	7	20	Each
630E2150	End Terminal Wood Breakaway Post	2	4	4	10	Each
630E2155	End Terminal Hinged Breakaway Post	<---------- 3 ---------->			3	Each
630E2210	Breakaway Cable Terminal End Rail	<---------- 1 ---------->			1	Each
630E2215	W Beam Guardrail End Section Buffer	<---------- 4 ---------->			4	Each
630E2220	Tangent End Terminal Extruder Head	<---------- 1 ---------->			1	Each
630E2222	MGS Extruder Head	<---------- 1 ---------->			1	Each
630E2235	Tangent End Terminal Rail	<---------- 25 ---------->			25	Ft
630E2260	MGS End Rail	<---------- 12.5 ---------->			12.5	Ft
630E2262	MGS Terminal Post	<---------- 1 ---------->			1	Each
630E2264	MGS Anchor Post	<---------- 1 ---------->			1	Each
630E2300	Rubrail	<---------- 14 ---------->			14	Ft
630E5212	Reset MGS Extruder Head	<---------- 3 ---------->			3	Each
630E5520	Drive Down Beam Guardrail Post	<---------- 40 ---------->			40	Each
630E5550	Reset Beam Guardrail Post and Block	5	5	5	15	Each
632E2220	Guardrail Delineator	20	25	25	70	Each
632E2510	Type 2 Object Marker Back to Back	1	1	1	3	Each
632E2520	Type 2 Object Marker	1	3	3	7	Each
634E0010	Flagging	4	4	4	12	Hour
634E0110	Traffic Control Signs	90	192	192	474	SqFt
634E0120	Traffic Control, Miscellaneous	<---------- Lump Sum ---------->			Lump Sum	LS
634E0275	Type 3 Barricade	<---------- 1 ---------->			1	Each
634E0420	Type C Advance Warning Arrow Panel	<---------- 1 ---------->			1	Each

ENVIRONMENTAL COMMITMENTS

The SDDOT is committed to protecting the environment and uses Environmental Commitments as a communication tool for the Engineer and Contractor to ensure that attention is given to avoid, minimize, and/or mitigate an environmental impact. Environmental commitments to various agencies and the public have been made to secure approval of this project. An agency with permitting authority can delay a project if identified environmental impacts have not been adequately addressed. Unless otherwise designated, the Contractor's primary contact regarding matters associated with these commitments will be the Project Engineer. During construction, the Project Engineer will verify that the Contractor has met Environmental Commitment requirements. These environmental commitments are not subject to change without prior written approval from the SDDOT Environmental Office.

Additional guidance on SDDOT's Environmental Commitments can be accessed through the Environmental Procedures Manual found at: https://dot.sd.gov/media/documents/EnvironmentalProceduresManual.pdf

For questions regarding change orders in the field that may have an effect on an Environmental Commitment, the Project Engineer will contact the Environmental Engineer at 605-773-3180 or 605-773-4336 to determine whether an environmental analysis and/or resource agency coordination is necessary.

Once construction is complete, the Project Engineer will review all environmental commitments for the project and document their completion.

COMMITMENT B: FEDERALLY THREATENED, ENDANGERED, AND PROTECTED SPECIES

COMMITMENT B2: WHOOPING CRANE

The Whooping Crane is a spring and fall migratory bird in South Dakota that is about 5 feet tall and typically stops on wetlands, rivers, and agricultural lands along their migration route. An adult Whooping Crane is white with a red crown and a long, dark, pointed bill. Immature Whooping Cranes are cinnamon brown. While in flight, their long necks are kept straight and their long dark legs trail behind. Adult Whooping Cranes' black wing tips are visible during flight.

Action Taken/Required:

Harassment or other measures to cause the Whooping Crane to leave the site is a violation of the Endangered Species Act. If a Whooping Crane is sighted roosting in the vicinity of the project, borrow pits, or staging areas associated with the project, cease construction activities in the affected area until the Whooping Crane departs and immediately contact the Project Engineer. The Project Engineer will contact the Environmental Office so that the sighting can be reported to USFWS.

COMMITMENT B4: BALD EAGLE

Bald eagles are known to occur in this area.

Action Taken/Required:

If a nest is observed within one mile of the project site, notify the Project Engineer immediately so that he/she can consult with the Environmental Office for an appropriate course of action.

COMMITMENT C: WATER SOURCE

The Contractor will not withdraw water with equipment previously used outside the State of South Dakota or previously used in aquatic invasive species (AIS) positive waters within South Dakota without prior approval from the SDDOT Environmental Office. To prevent and control the introduction and spread of invasive species into the project vicinity, all equipment will be power washed with hot water (≥140 °F) and completely dried for a minimum of 7 days prior to subsequent use. South Dakota administrative rule 41:10:04:02 forbids the possession and transport of AIS; therefore, all attached dirt, mud, debris and vegetation must be removed and all compartments and tanks capable of holding standing water must be drained. This includes, but is not limited to, all equipment, pumps, lines, hoses and holding tanks.

The Contractor will not withdraw water directly from streams of the James, Big Sioux, and Vermillion watersheds without prior approval from the SDDOT Environmental Office.

COMMITMENT C: WATER SOURCE (CONTINUED)

Action Taken/Required:

The Contractor will obtain the necessary permits from the regulatory agencies such as the South Dakota Department of Agriculture and Natural Resources (DANR) and the United States Army Corps of Engineers (USACE) prior to water extraction activities.

Additional information and mapping of water sources impacted by Aquatic Invasive Species in South Dakota can be accessed at:
<http://sdleastwanted.com/maps/default.aspx>

South Dakota Administrative Rule 41:10:04 Aquatic Invasive Species:
<https://sdlegislature.gov/rules/DisplayRule.aspx?Rule=41:10:04>

COMMITMENT E: STORM WATER

Construction activities constitute less than 1 acre of disturbance.

Action Taken/Required:

At a minimum and regardless of project size, appropriate erosion and sediment control measures must be installed to control the discharge of pollutants from the construction site.

COMMITMENT H: WASTE DISPOSAL SITE

The Contractor will furnish a site(s) for the disposal of construction and/or demolition debris generated by this project.

Action Taken/Required:

Construction and/or demolition debris may not be disposed of within the Public ROW.

The waste disposal site(s) will be managed and reclaimed in accordance with the following from the General Permit for Construction/Demolition Debris Disposal Under the South Dakota Waste Management Program issued by the Department of Agriculture and Natural Resources.

The waste disposal site(s) will not be located in a wetland, within 200 feet of surface water, or in an area that adversely affects wildlife, recreation, aesthetic value of an area, or any threatened or endangered species, as approved by the Environmental Office and the Project Engineer.

If the waste disposal site(s) is located such that it is within view of any ROW, the following additional requirements will apply:

1. Construction and/or demolition debris consisting of concrete, asphalt concrete, or other similar materials will be buried in a trench separate from wood debris. The final cover over the construction and/or demolition debris will consist of a minimum of 1 foot of soil capable of supporting vegetation. Waste disposal sites provided outside of the Public ROW will be seeded in accordance with Natural Resources Conservation Service recommendations. The seeding recommendations may be obtained through the appropriate County NRCS Office. The Contractor will control the access to waste disposal sites not within the Public ROW with fences, gates, and placement of a sign or signs at the entrance to the site stating No Dumping Allowed.
2. Concrete and asphalt concrete debris may be stockpiled within view of the ROW for a period not to exceed the duration of the project. Prior to project completion, the waste will be removed from view of the ROW or buried, and the waste disposal site reclaimed as noted above.

The above requirements will not apply to waste disposal sites that are covered by an individual solid waste permit as specified in SDCL 34A-6-58, SDCL 34A-6-1.13, and ARSD 74:27:10:06.

Failure to comply with the requirements stated above may result in civil penalties in accordance with South Dakota Solid Waste Law, SDCL 34A-6-1.31.

Cost associated with furnishing waste disposal site(s), disposing of waste, maintaining control of access (fence, gates and signs), and reclamation of the waste disposal site(s) will be incidental to the various contract items.

COMMITMENT I: HISTORICAL PRESERVATION OFFICE CLEARANCES

State Historical Preservation Office (SHPO or THPO) concurrence has not been obtained for this project.

Action Taken/Required:

All earth disturbing activities require a cultural resource review prior to scheduling the pre-construction meeting. This work includes but is not limited to: Contractor furnished material sources, material processing sites, stockpile sites, storage areas, plant sites, and waste areas.

The Contractor will arrange and pay for a record search and when necessary, a cultural resource survey. The Contractor has the option to contact the state Archaeological Research Center (ARC) at 605-394-1936 or another qualified archaeologist, to obtain either a records search or a cultural resources survey. A record search might be sufficient for review if the site was previously surveyed; however, a cultural resources survey may need to be conducted by a qualified archaeologist.

The Contractor will provide ARC with the following: a topographical map or aerial view in which the site is clearly outlined, site dimensions, project number, and PCN. If applicable, provide evidence that the site has been previously disturbed by farming, mining, or construction activities with a landowner statement that artifacts have not been found on the site.

The Contractor will submit the cultural resources survey report to SDDOT Environmental Office, 700 East Broadway Avenue, Pierre, SD 57501-2586. SDDOT will submit the information to the appropriate SHPO/THPO. Allow 30 Days from the date this information is submitted to the Environmental Engineer for SHPO/THPO review.

In the event of an inadvertent discovery of human remains, funerary objects, or if evidence of cultural resources is identified during project construction activities, then such activities within 100 feet of the inadvertent discovery will immediately cease and the Project Engineer will be immediately notified. The Project Engineer will contact the SDDOT Environmental Office, who will contact the appropriate SHPO/THPO within 48 hours of the discovery to determine an appropriate course of action.

The Contractor is responsible for obtaining any additional permits and clearances for Contractor furnished material sources, material processing sites, stockpile sites, storage areas, plant sites, and waste areas that affect wetlands, threatened and endangered species, or waterways. The Contractor will not utilize a site known or suspected of having contaminated soil or water. The Contractor will provide the required permits and clearances to the Project Engineer at the preconstruction meeting.

SPECIFICATIONS

Standard Specifications for Roads and Bridges, 2015 Edition and Required Provisions, Supplemental Specifications and/or Special Provisions as included in the proposal.

LOCATION

Guardrail repair will be limited to all Interstate and State Highways within the Mitchell Area.

ESTIMATED QUANTITIES

The Contractor will furnish and install new guardrail material as per the Contract Proposal. The quantities for each item are estimated. The actual amount of work required may vary greatly from the Estimate of Quantities. There will be NO negotiation for overruns or underruns on this contract.

MOBILIZATION

Mobilization 1 (Unit 251) - is the cost for mobilization per each time the Contractor is called in by the Area Engineer to perform guardrail repair within the Mitchell Area – Unit 251.

Mobilization 2 (Unit 252) - is the cost for mobilization per each time the Contractor is called in by the Area Engineer to perform guardrail repair within the Mitchell Area – Unit 252.

Mobilization 3 (Unit 253) - is the cost for mobilization per each time the Contractor is called in by the Area Engineer to perform guardrail repair within the Mitchell Area – Unit 253.

Mobilization 1 (Unit 251), Mobilization 2 (Unit 252) or Mobilization 3 (Unit 253) will be paid for once each time the Contractor is called to the Unit, regardless of the number of sites requiring repair within that Unit.

EMBANKMENT AND SURFACING FOR GUARDRAIL INSTALLATIONS

It is not anticipated that embankment and surfacing will be required as a part of this contract. However, if embankment and/or surfacing material (base material and/or asphalt concrete) are/is required to perform a guardrail installation, it will be provided in accordance with the specifications, and either:

1. Furnished by the State and a placement price will be negotiated, or
2. Furnished and placed by the Contractor and a price will be negotiated, or
3. Accomplished by other means approved by the Engineer.

RESTORATION OF DISTURBED AREAS

Areas disturbed as a result of work necessary under this Contract will be reshaped and/or restored to the satisfaction of the Engineer.

Slopes and berms disturbed will be leveled, excess material removed, area tilled to the minimum depth of three inches, seeded with Intermediate Wheatgrass at the rate of 18 Pounds P.L.S. per acre and fertilized with a commercial fertilizer with a minimum guaranteed analysis of 18-46-0 applied at the rate of 100 pounds per acre.

Cost for reshaping, leveling, removal of excess material, tilling, seeding and fertilizing disturbed areas on the slopes and berms will be incidental to the contract unit prices for the various items.

REMOVING GUARDRAIL

Cost for removing and disposing of guardrail items will be incidental to the contract unit prices for the various items. Removed guardrail items that are not reused will become the property of the Contractor.

SAFETY TREATMENT STANDARDS

Repair will be done in such a manner that the safety treatment in place after repair will meet or exceed the safety treatment in place prior to guardrail damage.

WORK DETERMINATION

The Engineer and the Contractor will assess damage and agree on a solution (repair, reset, replacement or a combination thereof).

GUARDRAIL COMPLETION REQUIREMENTS

At such time as repairs are required, the Contractor will be notified. The Contractor will have 21 days to complete the repairs. In the event that the Contractor has other guardrail work scheduled on another SD State contract, the Contractor may contact the Engineer to work out a reasonable schedule to accomplish the work. The Engineer will consider extending the completion time based on traffic volume, possible accident severity and probability.

Once the existing guardrail is removed from a bridge end, box culvert, bridge column, etc., the Contractor will place drums or Type 2 Barricades at 25 foot intervals at each location where existing guardrail is removed. These devices will extend 175 feet beyond the item of concern for each direction of traffic. Drums and Barricades will remain in place until new guardrail has been installed.

Post end, beam, and end terminal sections will be erected in a continuous operation within each individual run of guardrail. Incomplete guardrail installations will be marked by delineation as noted in the previous paragraph.

If the Contractor does not complete the required work within the time allowed, the Contractor will install an approved safety treatment that complies with crashworthy requirements for test level 3 of National Cooperative Highway Research Program (NCHRP) Report 350 or the AASHTO Manual for Assessing Safety Hardware (MASH) to protect the site. Safety treatment used must meet or exceed the in place safety treatment prior to guardrail damage.

Failure to comply with this requirement will necessitate liquidated damages being assessed at a rate of $500 for each calendar day that the guardrail work remains incomplete. This provision applies up to the contract completion date. After the contract completion date, liquidated damages will be assessed in accordance with Section 8.8 or $500, whichever is greater.

GUARDRAIL GENERAL

Cost for furnishing and installing hardware (including, but not limited to new bolts, nuts, washers, straps, cable spacers, nails, etc.) necessary for installing, resetting and repairing any of the various beam/cable/high tension cable guardrail types will be incidental to the contract unit prices for the various items.

Should other items be required that are not in the Contract Proposal, the Contractor will furnish the items and will be paid invoice cost plus shipping, taxes and ten percent for profit. Prior approval of the Engineer will be required. Installation cost for these items will be incidental to the contract unit prices for the various items.

When a significant portion of any guardrail installation is damaged (say, more than half the installation) the Contractor will request a new guardrail design from the Department.

Cable guardrail repair/replacement (where applicable) will be placed at a flare rate no sharper than 34:1.

OUTSIDE SHOULDER INSTALLATION

Whenever an outside shoulder end terminal is significantly damaged, the entire end terminal will be removed and replaced with an approved end terminal from the SDDOT Approved List of W Beam Guardrail Terminals. The Contractor must select an appropriate end terminal to match the standard for the existing installation. Installation of these terminals will be as per Standard Plates 630.86, 630.87, 630.88, 630.89 and/or 630.90.

The entire beam portion of the guardrail will be installed within the allotted time as described in the Guardrail Completion Requirement notes. The cable portion (where applicable) may be installed in early spring after the ground has thawed, however, the Department, for safety, may order installation of the cable portion within the allotted time as described in the Guardrail Completion Requirements notes.

MEDIAN SHOULDER INSTALLATION

At existing Beam/Cable Installation - Whenever a median beam end terminal is significantly damaged, the entire length of beam guardrail (except for the 43.75' closest to the bridge if this portion of the guardrail is not damaged) will be replaced as per the detail for Typical Median Protection. This may involve cutting the existing guardrail. Whether the existing installation is W Beam or Thrie/W Beam, the total length of the newly completed installation will be 81.25'. The cable portion may be installed in early spring after the ground has thawed, however, the Department, for safety, may order installation of the cable portion within the allotted time as described in the Guardrail Completion Requirements notes.

At existing Beam Installation - Repair will be per the standard plates.

The entire beam portion of the guardrail will be installed within the allotted time as described in the Guardrail Completion Requirement notes.

GUARDRAIL END TREATMENT

Whenever an end treatment is significantly damaged, the entire end treatment will be replaced per specifications/ manufacturer's recommendations. Where feasible, the newest approved model of an end treatment should be used to replace the damaged end. Where not feasible, the end treatment should be replaced in-kind. If parts are no longer available for discontinued models, the solution may involve selecting a different end treatment, with similar characteristics.

3 CABLE GUARDRAIL

Repair 3 Cable Guardrail - Includes the cost for putting existing 3 cable guardrail back into its original position and, if required, realigning posts within the displaced length of three cable guardrail. Payment for this item is applicable only when the existing cable rail requires being put back in place and posts require realigning.

Payment length will be:

- From the first existing post that does not need replacing on each end of the repair area,
- From the first existing post that does not need replacing to the anchor if the anchor post, end posts or transition bracket are replaced or,
- From the first existing post that does not need replacing to the transition bracket if the transition bracket is not replaced.

If multiple areas require repair within a cable installation, the areas will be measured separately.

Retension 3 Cable Guardrail – Includes the cost for retensioning of the entire run of cable guardrail. Payment will be made once per each installation retensioned, regardless of whether one, two or three cables require retensioning. Retensioning may include cutting and shortening of cables at the anchors to allow for proper tensioning.

Repair 3 Cable Guardrail Slip Base Anchor Assembly - This item will be considered full compensation for removal, repair and replacement of the damaged Slip Base Anchor Assembly. This work will be performed if it is determined that the Slip Base Anchor Assembly can be repaired without total footing removal. The work will consist of coring a 12" diameter section into the existing footing, centered over the existing slip base anchor stub post, to a depth of 22". The core will then be broken off and disposed of. The sides of the hole in the footing will be roughened to the satisfaction of the Engineer. A rapid-setting, non-shrink, non-metallic grout will be used (in accordance with the manufacturer's recommendations) to anchor the new slip base anchor stub post in the footing. The grout will reach a compressive strength of over 5000 PSI.

3 Cable Guardrail Post, Winter - Includes the additional cost for removal and installation of 3 Cable Guardrail Posts (I Beam and Flanged Channel) when there is in excess of one foot of solid frozen ground at the work site. This contract unit price will be an additional payment for each post installed under these conditions.

Drive Down 3 Cable Guardrail Post - Includes the cost for adjusting the height of a cable guardrail post. Cost for disassembly/reassembly of the cable guardrail necessary to perform this adjustment will be incidental to the contract unit price for this item.

Reset 3 Cable Guardrail Post - Includes removing and resetting cable guardrail post to the proper alignment with existing cable guardrail. Payment will be the same in frozen or unfrozen ground.

HIGH TENSION CABLE GUARDRAIL

High Tension Guardrail items will be furnished and installed, reset, repaired and tensioned per the manufacturer's details and instructions.

Retension High Tension Cable Guardrail – Includes the cost for retensioning a length of high tension cable guardrail. Payment will be made once per foot length of installation retensioned, regardless of whether one, two three or four cables require retensioning. Retensioning will include cutting and shortening of cables at the anchors to allow for proper tensioning.

BEAM GUARDRAIL

Beam Guardrail Post, Beam Guardrail Block and Beam Guardrail Post and Block – Includes the cost for removal and installation of the various sizes and types of Post and Block being replaced. Posts and Blocks used will be of the appropriate size and type for the installation being repaired.

BEAM GUARDRAIL (CONTINUED)

Beam Guardrail Post and Block, Winter - Includes the additional cost for removal and installation of posts and blocks when there is in excess of one foot of solid frozen ground at the work site. This contract unit price will be an additional payment for each post and block installed under these conditions.

Drive Down Beam Guardrail Post - Includes the cost for adjusting the height of a beam guardrail post. Cost for disassembly/reassembly of the beam guardrail necessary to perform this adjustment will be incidental to the contract unit price for this item.

Reset Beam Guardrail Post and Block - Includes removing and resetting guardrail post and block to the proper alignment with existing beam guardrail. Payment will be the same in frozen or unfrozen ground.

W Beam Guardrail Breakaway Cable Terminal (BCT) – Includes the cost for removing damaged components of the existing terminal (including rail), furnishing and installing new Breakaway End Posts (2), W Beam End Section (Buffer) 11”± radius, Modified W Beam Connector, related items and all hardware to attach. Any other BCT items that are required will be paid for at invoice cost plus shipping, taxes and ten percent profit (labor will be incidental to other items). The BCT will only be installed at locations where a W Beam to 3 Cable Transition is required.

Breakaway Cable Terminal End Rail – Includes the cost to remove existing and install a new end rail.

W Beam Guardrail End Section Buffer – Includes the cost to remove existing and install a new buffer assembly.

End Terminals (except BCTs) must be selected from the SDDOT Approved Products List at:
https://dot.sd.gov/doing-business/certification-accreditation/approved-products

End Terminal Wood Breakaway Post – Includes the cost to remove the existing and install a new wood breakaway post on an end terminal.

End Terminal Hinged Breakaway Post – Includes the cost to remove the existing and install a new breakaway post on an end terminal.

Tangent End Terminal Extruder Head – Includes the cost to remove the existing and install a new Tangent End Terminal Extruder Head on a tangent end terminal.

Tangent End Terminal Rail – Includes the cost to remove existing and install new beam guardrail on a tangent end terminal.

W Beam Slotted Rail for High Tension Cable Connection – Includes the cost to remove existing and install a new W Beam Slotted Rail for High Tension Cable Connection.

MIDWEST GUARDRAIL SYSTEM (MGS)

If the Contractor is directed to perform repair on an MGS site, the repair will be in accordance with the applicable standard plates for MGS.

Cost for repair at an MGS site will be included in the contract unit prices for the pertinent MGS and Beam Guardrail items.

END PROTECTION

Concrete Barrier End Protection - This item will be considered full compensation for removal and disposal of the existing system and replacement with a new Tracc Barrier Protection System.

Refurbish Concrete Barrier End Protection - This item will be considered full compensation for removal, repair and replacement of the damaged Tracc Barrier Protection System. The Contractor will load and transport the Tracc system stored at the Sioux Falls Area Office Complex to the accident site. The in place damaged Tracc system will be removed and replaced with the unit from the Sioux Falls Area Complex. The damaged unit will be rebuilt in accordance with the manufacturer’s instructions at the Contractor’s shop. After being rebuilt the Contractor will transport it to the Mitchell or Sioux Falls Area Complex for future use. The Engineer will specify which Complex.

Concrete Barrier End Protection (MASH) - This item will be considered full compensation for removal and disposal of the existing system and replacement with an end protection system meeting MASH.

The Engineer will specify the replacement protection system to be installed.

GUARDRAIL DELINEATION

Whenever the Contractor is directed to perform guardrail repair, all of the guardrail delineation at the location will be considered for upgrade. This will typically involve guardrail delineation at two to eight guardrail runs (For example: At twin structures, if one guardrail run is damaged, and the existing guardrail delineation at the site is not at the current standard, then all of the substandard guardrail delineation at each guardrail run (all traffic directions, over and under) will be upgraded).

Cost for this work will be included in the contract unit prices per each for Guardrail Delineator, Type 2 Object Marker Back to Back, and Type 2 Object Marker.

GENERAL MAINTENANCE OF TRAFFIC

Portable sign supports may be used as long as the duration is 3 days or less. If the duration is more than 3 days the signs will be on fixed location, ground mounted, breakaway supports.

Sufficient traffic control devices have been included in these plans to sign one workspace. If the Contractor elects to work on additional sites simultaneously, the cost for additional traffic control devices will be incidental to the contract unit price per square foot for Traffic Control Signs.

ITEMIZED LIST FOR TRAFFIC CONTROL SIGNS

		EXPRESSWAY / INTERSTATE			
SIGN CODE	SIGN DESCRIPTION	NUMBER	SIGN SIZE	SQFT PER SIGN	SQFT
R2-1	SPEED LIMIT 45	2	48" x 60"	20.0	40.0
R2-1	SPEED LIMIT 55	3	48" x 60"	20.0	60.0
R2-1	SPEED LIMIT 65	3	48" x 60"	20.0	60.0
R2-1	SPEED LIMIT 80	1	48" x 60"	20.0	20.0
R2-6aP	FINES DOUBLE (plaque)	1	36" x 24"	6.0	6.0
W3-5	SPEED REDUCTION AHEAD (45 MPH)	1	48" x 48"	16.0	16.0
W3-5	SPEED REDUCTION AHEAD (55 MPH)	2	48" x 48"	16.0	32.0
W3-5	SPEED REDUCTION AHEAD (65 MPH)	2	48" x 48"	16.0	32.0
W4-2	LEFT or RIGHT LANE ENDS (symbol)	2	48" x 48"	16.0	32.0
W20-1	ROAD WORK AHEAD	2	48" x 48"	16.0	32.0
W20-4	ONE LANE ROAD AHEAD	2	48" x 48"	16.0	32.0
W20-5	LEFT or RIGHT LANE CLOSED AHEAD	2	48" x 48"	16.0	32.0
W20-7	FLAGGER (symbol)	2	48" x 48"	16.0	32.0
W21-5	SHOULDER WORK	2	48" x 48"	16.0	32.0
G20-2	END ROAD WORK	2	48" x 24"	8.0	16.0
		EXPRESSWAY / INTERSTATE TRAFFIC CONTROL SIGNS SQFT			474.0

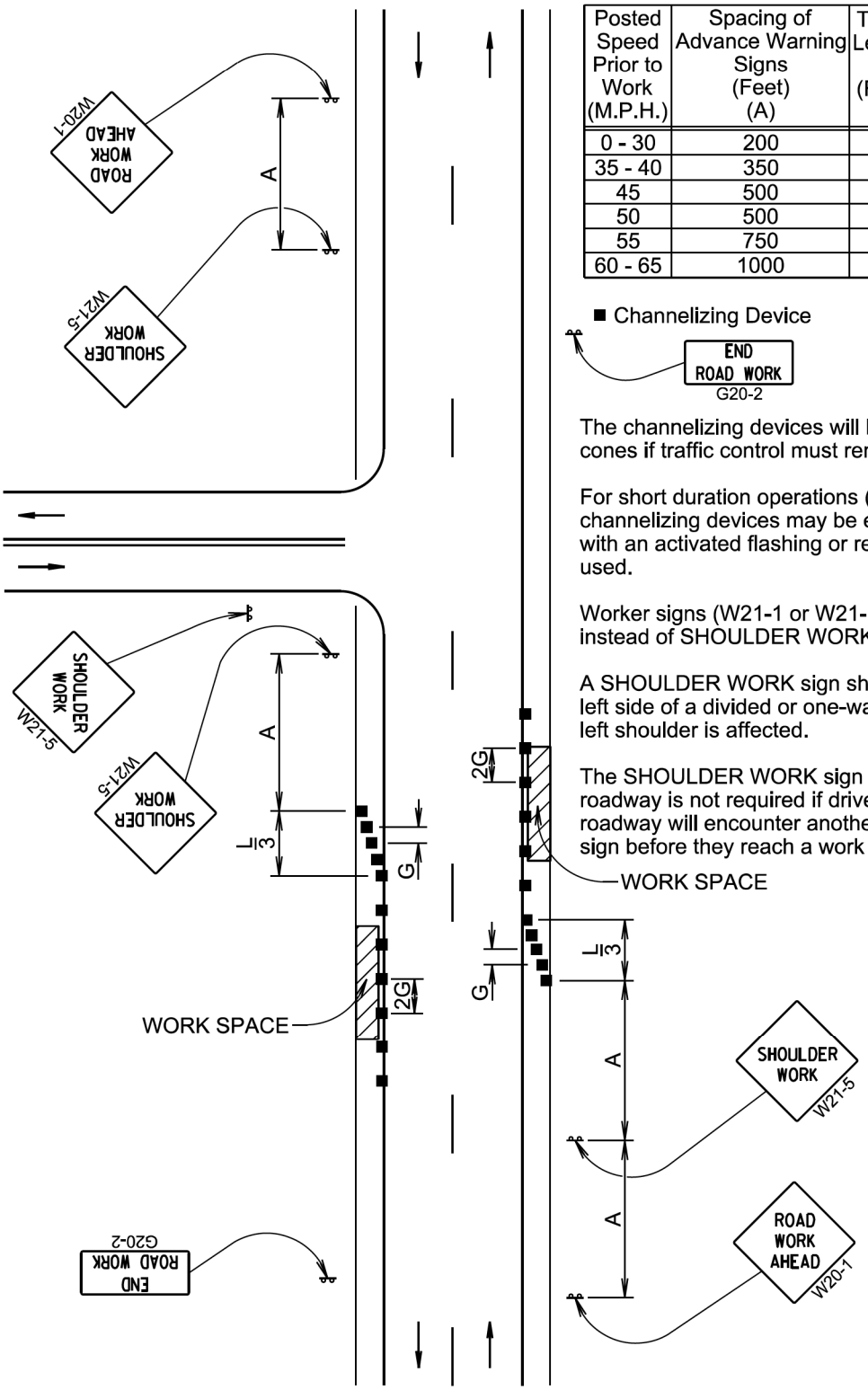

Posted Speed Prior to Work (M.P.H.)	Spacing of Advance Warning Signs (Feet) (A)	Taper Length (Feet) (L)	Spacing of Channelizing Devices (Feet) (G)
0 - 30	200	180	25
35 - 40	350	320	25
45	500	600	25
50	500	600	50
55	750	660	50
60 - 65	1000	780	50

■ Channelizing Device

END ROAD WORK
G20-2

The channelizing devices will be drums or 42" cones if traffic control must remain overnight.

For short duration operations (1 hour or less) all channelizing devices may be eliminated if a vehicle with an activated flashing or revolving yellow light is used.

Worker signs (W21-1 or W21-1a) may be used instead of SHOULDER WORK signs.

A SHOULDER WORK sign should be placed on the left side of a divided or one-way roadway only if the left shoulder is affected.

The SHOULDER WORK sign on an intersecting roadway is not required if drivers emerging from that roadway will encounter another advance warning sign before they reach a work activity area.

January 22, 2021

Published Date: 3rd Qtr. 2022

SDDOT

WORK ON SHOULDERS

PLATE NUMBER 634.03

Sheet 1 of 1

Posted Speed Prior to Work (M.P.H.)	Spacing of Advance Warning Signs (Feet) (A)	Spacing of Channelizing Devices (Feet) (G)
0 - 30	200	25
35 - 40	350	25
45	500	25
50	500	50
55	750	50
60 - 65	1000	50

Flagger

Channelizing Device

For low-volume traffic situations with short work zones on straight roadways where the flagger is visible to road users approaching from both directions, a single flagger may be used.

The ROAD WORK AHEAD and the END ROAD WORK signs may be omitted for short duration operations (1 hour or less).

For tack and/or flush seal operations, when flaggers are not being used, the FRESH OIL sign (W21-2) will be displayed in advance of the liquid asphalt areas.

Flashing warning lights and/or flags may be used to call attention to the advance warning signs.

The channelizing devices will be drums or 42" cones.

Channelizing devices are not required along the centerline adjacent to work area when pilot cars are utilized for escorting traffic through the work area.

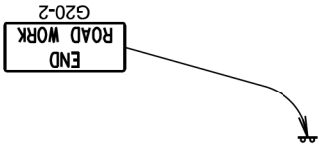

Channelizing devices and flaggers will be used at intersecting roads to control intersecting road traffic as required.

The buffer space should be extended so that the two-way traffic taper is placed before a horizontal or vertical curve to provide adequate sight distance for the flagger and queue of stopped vehicles.

The length of A may be adjusted to fit field conditions.

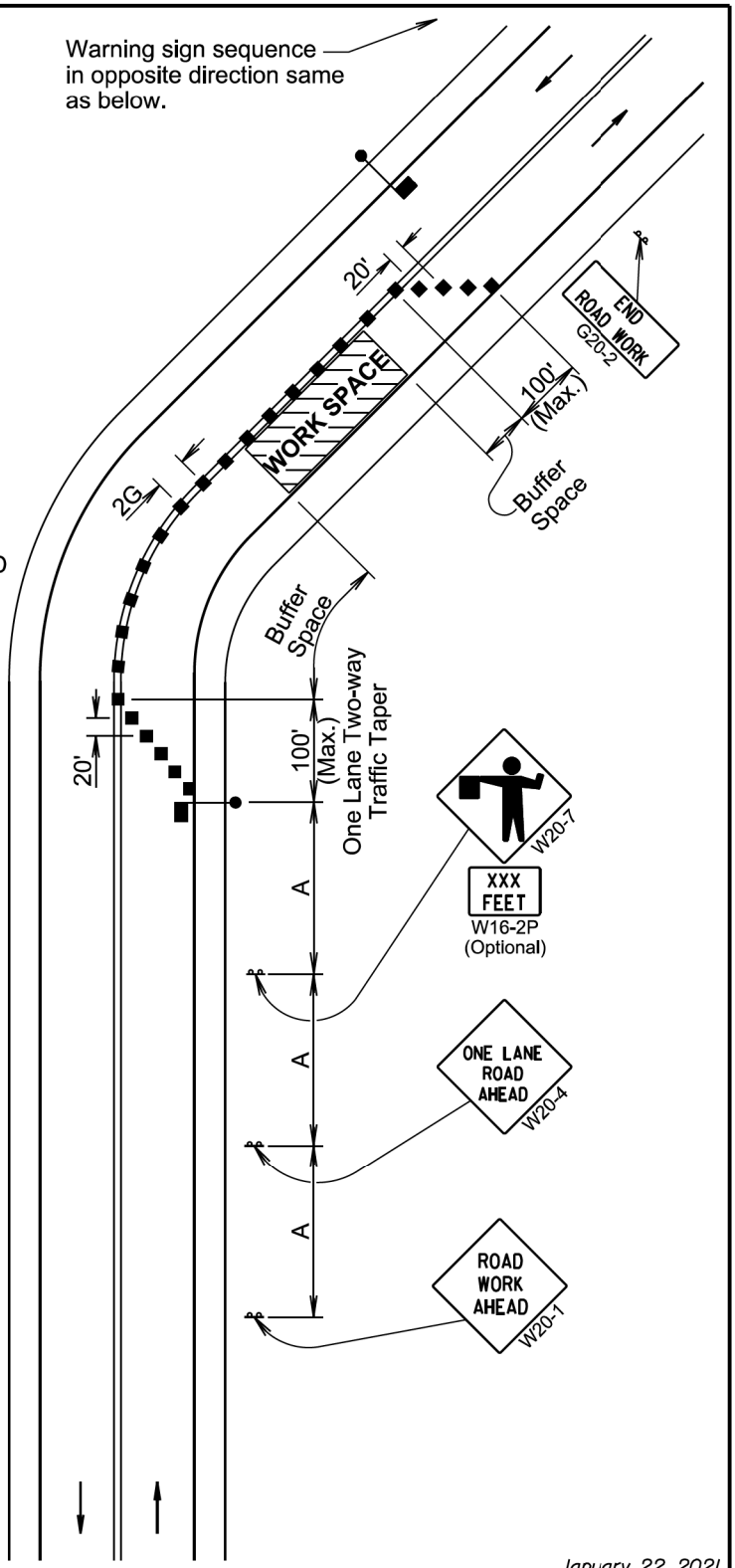

January 22, 2021

Published Date: 3rd Qtr. 2022	SDDOT	LANE CLOSURE WITH FLAGGER PROVIDED	PLATE NUMBER 634.23 Sheet 1 of 1

Posted Speed Prior to Work (M.P.H.)	Spacing of Advance Warning Signs (Feet) (A)	Taper Length (Feet) (L)	Spacing of Channelizing Devices (Feet) (G)
0 - 30	200	180	25
35 - 40	350	320	25
45	500	600	25
50	500	600	50 *
55	750	660	50 *
60 - 65	1000	780	50 *

* Spacing is 40' for 42" cones.

◎ Reflectorized Drum

■ Channelizing Device

(4 W) 4" White Temporary Pavement Marking

The channelizing devices will be 42" cones or drums.

42" cones may be used in place of the drums shown in the taper if setup will not be used during night time hours.

Temporary pavement markings will be used if traffic control must remain overnight.

The length of A and L may be adjusted to fit field conditions.

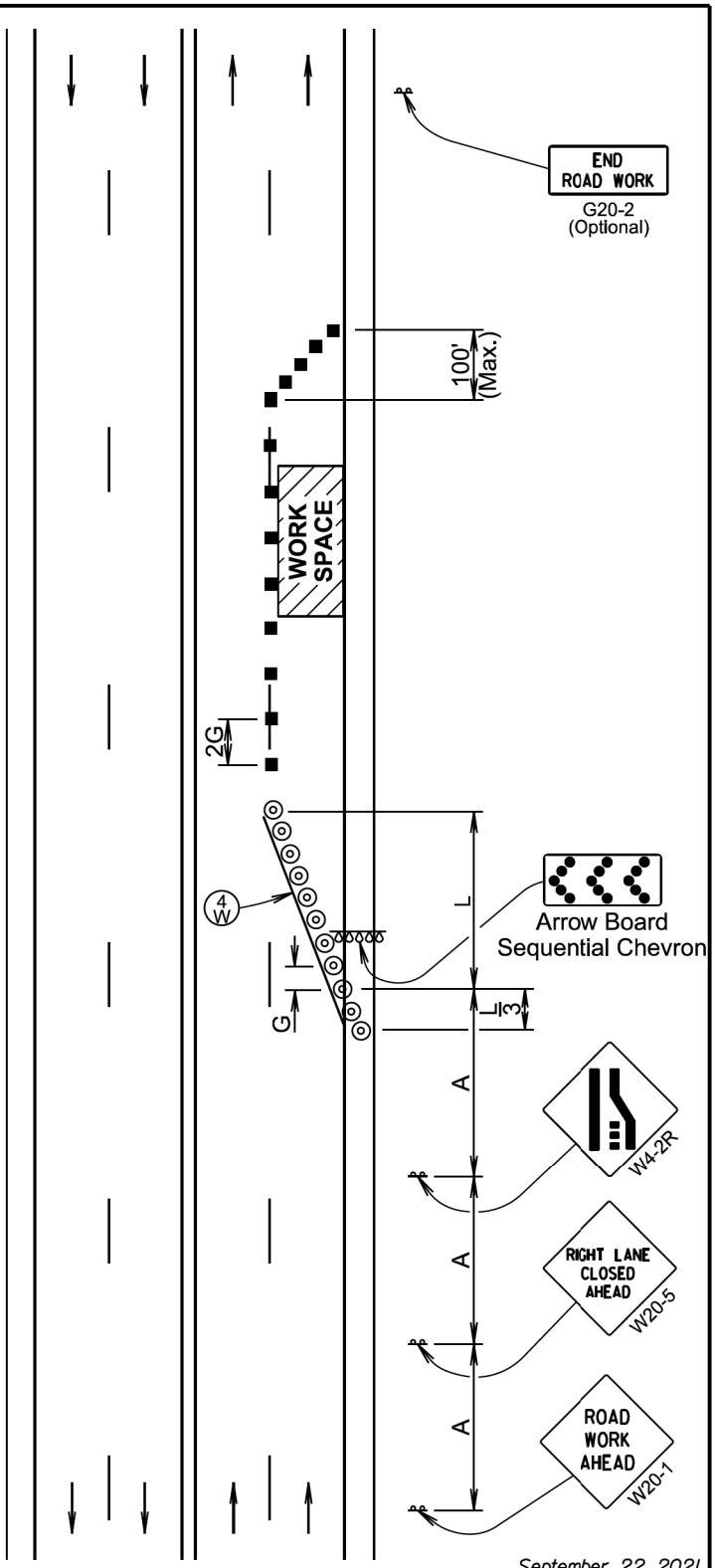

September 22, 2021

Published Date: 3rd Qtr. 2022

SDDOT

4-LANE UNDIVIDED, RIGHT LANE CLOSED

PLATE NUMBER 634.47

Sheet 1 of 1

◎ Reflectorized Drum

■ Channelizing Device

▭ Movable Concrete Barrier

** For distances ½ mile or greater.

Posted Speed Prior to Work (M.P.H.)	Spacing of Advance Warning Signs (Feet) (A) (B) (C)	Taper Length (Feet) (L)	Spacing of Channelizing Devices (Feet) (G)
0 - 30	200	180	25
35 - 40	350	320	25
45	500	600	25
50	500	600	50 *
55	750	660	50 *
60 - 65	1000	780	50 *
	(A) (B)		
70 - 80	1000 1500	1125	50 *

42" cones may be used in place of the drums shown in the taper if setup will not be used during night time hours.

This standard plate shows one method which may be used to close a shoulder of a roadway for a long term project. The Engineer will determine if the use of barriers is required. If barriers are required, the layout details will be included elsewhere in the plans.

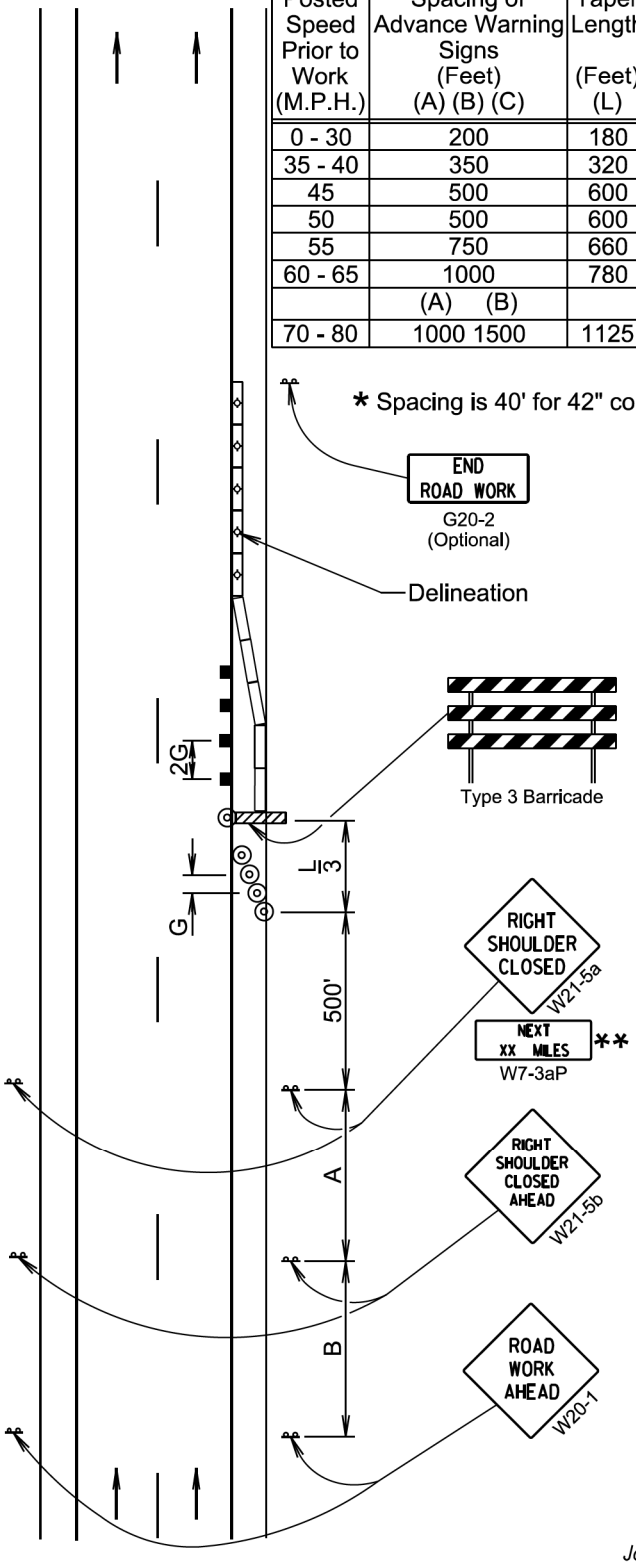

January 22, 2021

Published Date: 3rd Qtr. 2022

SDDOT

SHOULDER CLOSED

PLATE NUMBER 634.61

Sheet 1 of 1

Posted Speed Prior to Work (M.P.H.)	Spacing of Advance Warning Signs (Feet) (A) (B) (C)
0 - 30	200
35 - 40	350
45 - 50	500
55	750
60 - 65	1000
	(A) (B) (C)
70 - 80	1000 1500 2640

** Speed appropriate for location.

◎ Reflectorized Drum

▪ Channelizing Device

ROAD WORK AHEAD sign is only required in advance of the first lane closure.

High speed is defined as having a posted speed limit greater than 45 mph.

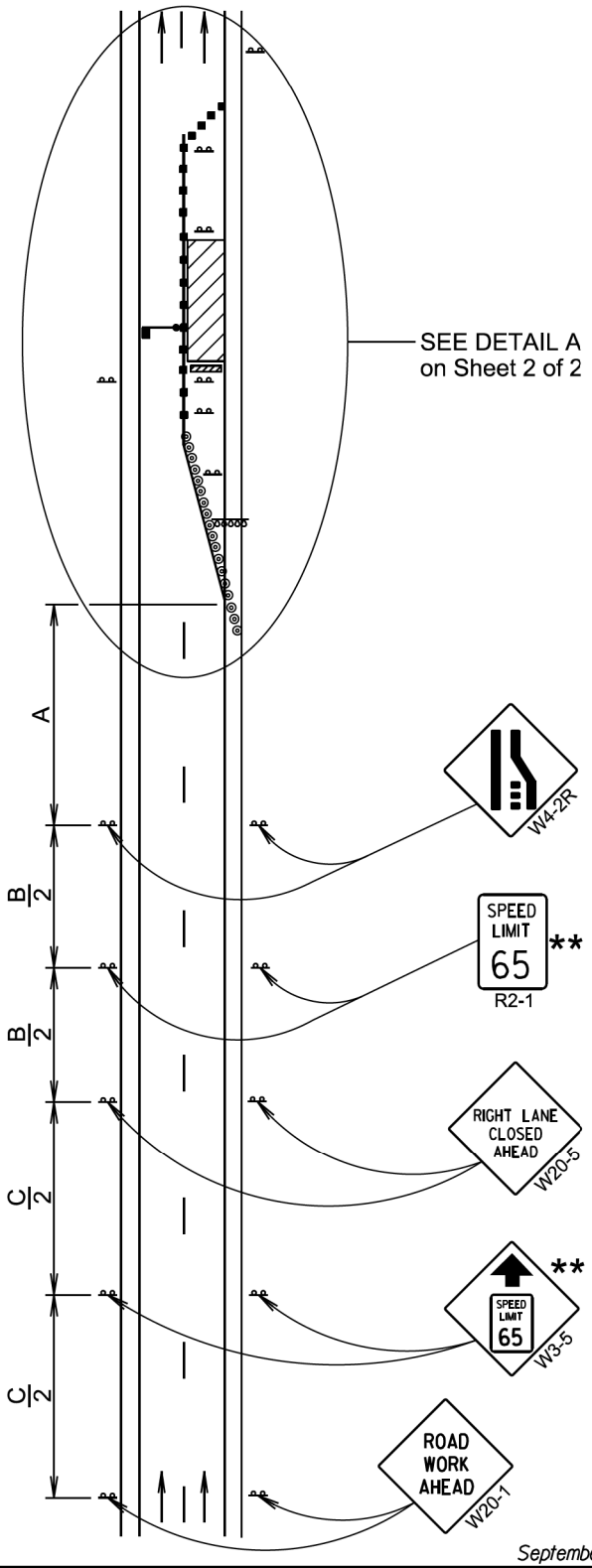

September 22, 2021

Published Date: 3rd Qtr. 2022

SDDOT

WORK ZONE SPEED REDUCTION FOR INTERSTATE AND HIGH SPEED MULTI-LANE HIGHWAYS

PLATE NUMBER 634.63

Sheet 1 of 2

Posted Speed Prior to Work (M.P.H.)	Spacing of Channelizing Devices (Feet) (G)	Taper Length (Feet) (L)
0 -30	25	180
35 - 40	25	320
45	25	600
50	50 *	600
55	50 *	660
60 - 65	50 *	780
70 - 80	50 *	960

* Spacing is 40' for 42" cones.

** Speed appropriate for location.

*** Use speed limit designated for the condition when workers are present in the work space. Signs will be covered or removed when workers are not present.

■—● Flagger (As Necessary)

◎ Reflectorized Drum

■ Channelizing Device

The Work Space will be a minimum of 500' from the end of the taper.

The FLAGGER sign will be used whenever there is a Flagger present.

The channelizing devices will be 42" cones or drums.

42" cones may be used in place of the drums shown in the taper if setup will not be used during night time hours.

4" white temporary pavement marking tape for right lane closures, 4" yellow temporary pavement marking tape for left lane closures, or temporary raised pavement markers at 5' spacing will be installed in the taper when the lane is closed overnight, and along the tangent section where the skip lines do not exist and the lane is closed for more than 3 days.

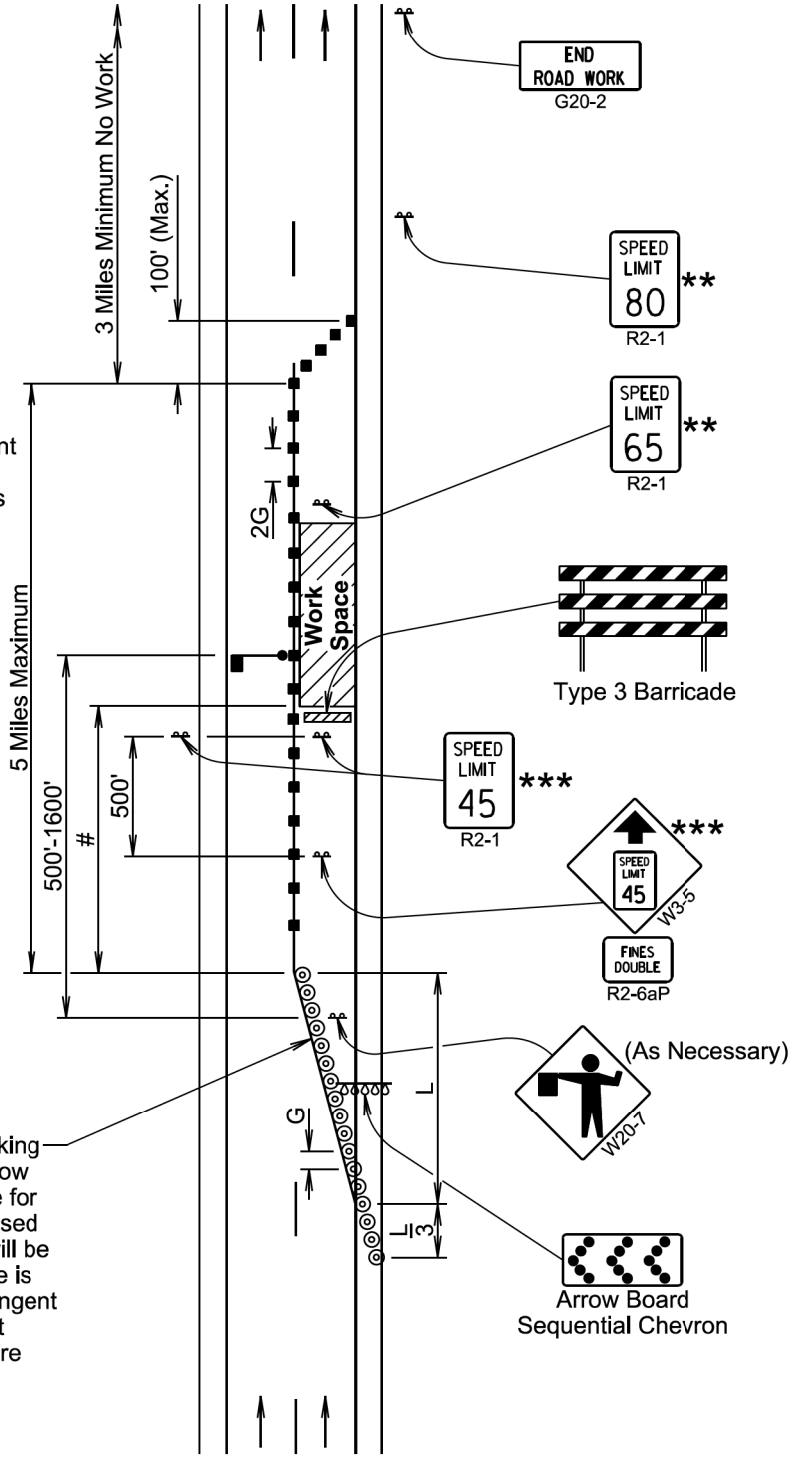

DETAIL A

September 22, 2021

Published Date: 3rd Qtr. 2022	SDDOT	WORK ZONE SPEED REDUCTION FOR INTERSTATE AND HIGH SPEED MULTI-LANE HIGHWAYS	PLATE NUMBER 634.63 Sheet 2 of 2

Posted Speed Prior to Work (M.P.H.)	Spacing of Advance Warning Signs (Feet) (A) (B) (C)	Taper Length (Feet) (L)
0 - 30	200	180
35 - 40	350	320
45 - 50	500	600
55	750	660
60 - 65	1000	780
	(A) (B) (C)	
70 - 80	1000 1500 2640	960

Posted Speed Prior to Work (M.P.H.)	Length of Longitudinal Buffer Space (Feet)
20	115
25	155
30	200
35	250
40	305
45	360
50	425
55	495
60	570
65	645
70	730
75	820
80	910

Posted Speed Prior to Work (M.P.H.)	Spacing of Channelizing Devices (Feet) (G)
0 - 30	25
35 - 45	25
50	50 *
55	50 *
60 - 65	50 *
75 - 80	50 *

* Spacing is 40' for 42" cones.

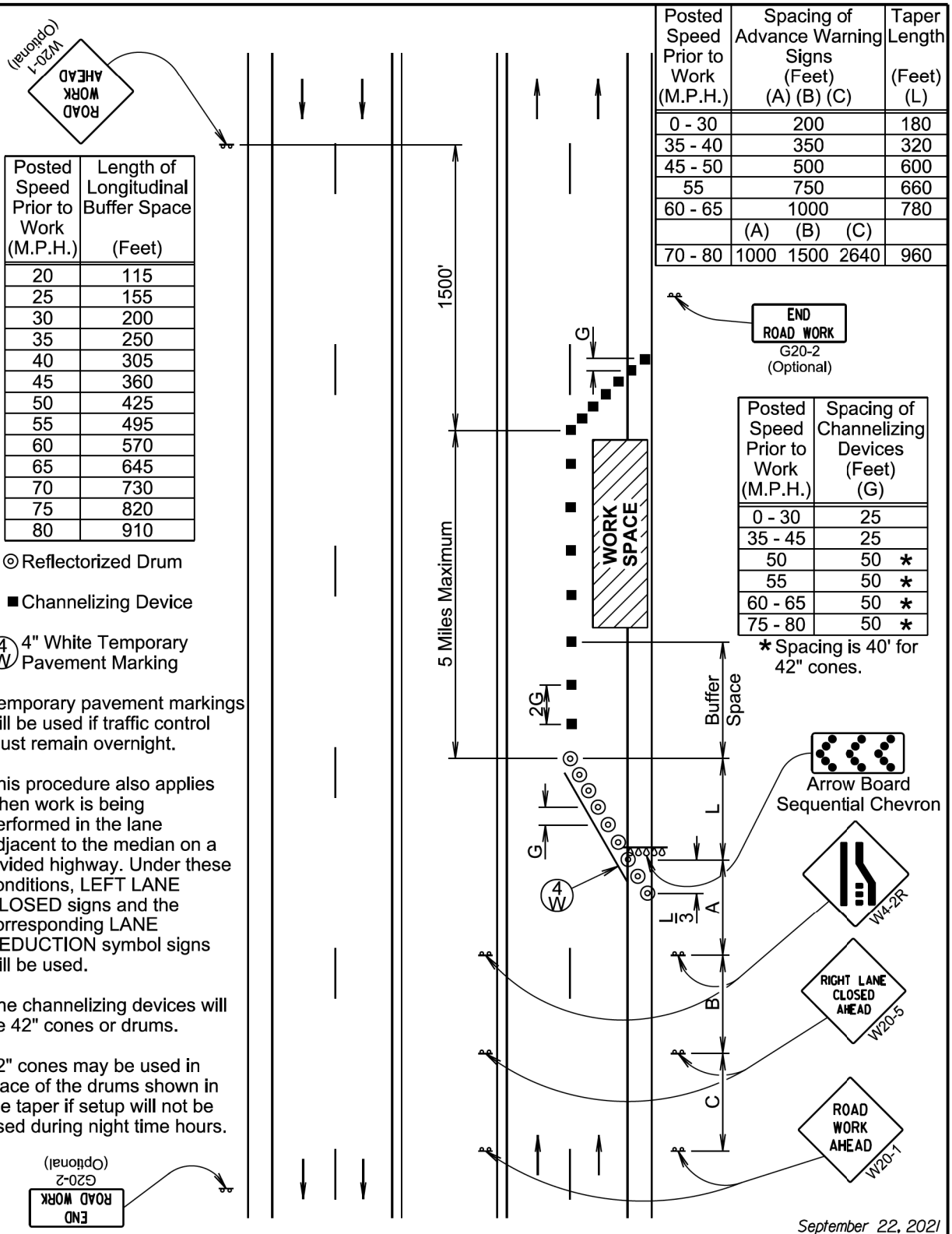

◎ Reflectorized Drum

■ Channelizing Device

(4 W) 4" White Temporary Pavement Marking

Temporary pavement markings will be used if traffic control must remain overnight.

This procedure also applies when work is being performed in the lane adjacent to the median on a divided highway. Under these conditions, LEFT LANE CLOSED signs and the corresponding LANE REDUCTION symbol signs will be used.

The channelizing devices will be 42" cones or drums.

42" cones may be used in place of the drums shown in the taper if setup will not be used during night time hours.

September 22, 2021

Published Date: 3rd Qtr. 2022

SDDOT

LANE CLOSURE WITHOUT BARRIER

PLATE NUMBER 634.64

Sheet 1 of 1

Posted Speed Prior to Work (M.P.H.)	Spacing of Advance Warning Signs (Feet) (A) (B) (C)	Taper Length (Feet) (L)
0 - 30	200	180
35 - 40	350	320
45 - 50	500	600
55	750	660
60 - 65	1000	780
	(A) (B) (C)	
70 - 80	1000 1500 2640	960

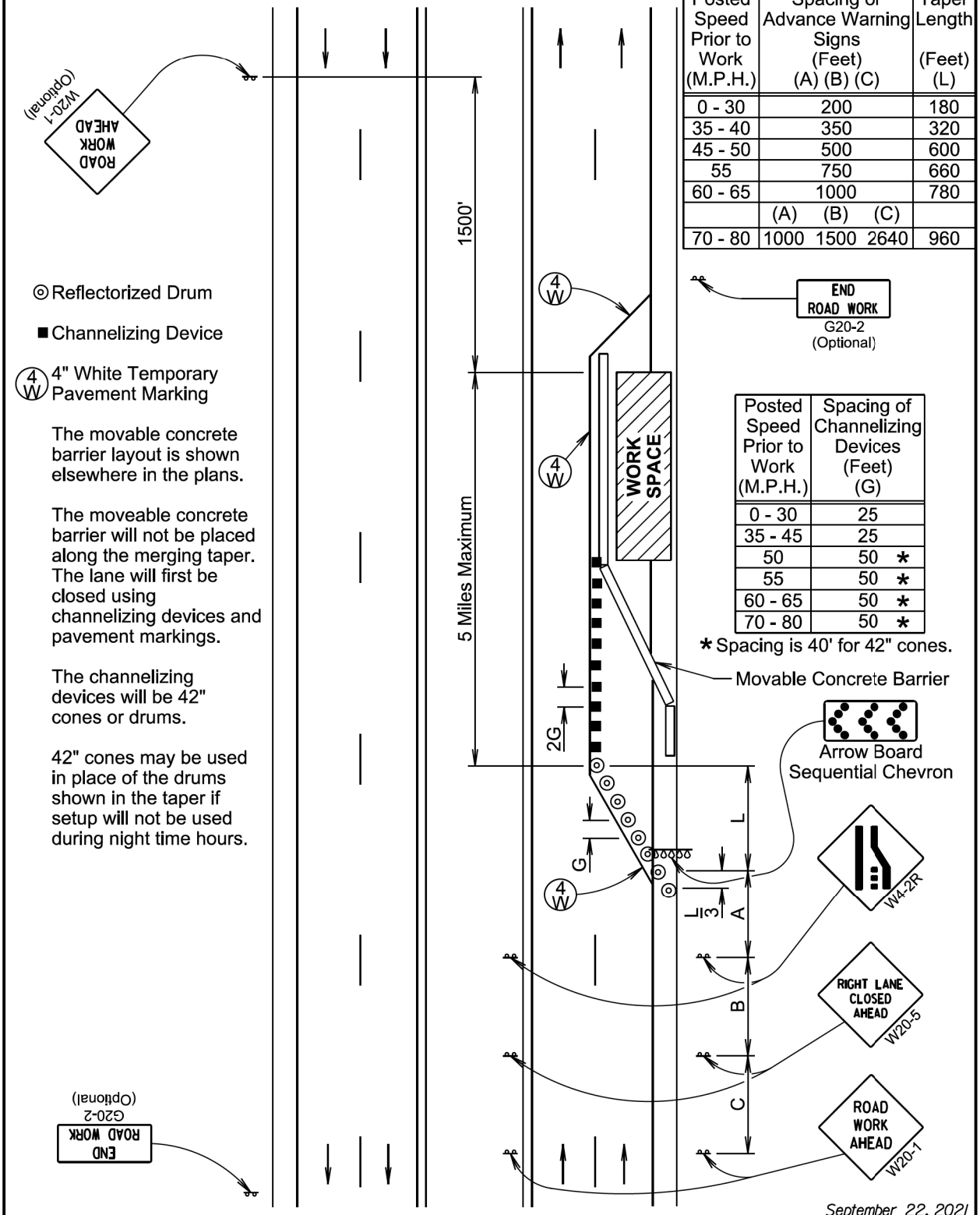

◎ Reflectorized Drum

■ Channelizing Device

4 W 4" White Temporary Pavement Marking

The movable concrete barrier layout is shown elsewhere in the plans.

The moveable concrete barrier will not be placed along the merging taper. The lane will first be closed using channelizing devices and pavement markings.

The channelizing devices will be 42" cones or drums.

42" cones may be used in place of the drums shown in the taper if setup will not be used during night time hours.

Posted Speed Prior to Work (M.P.H.)	Spacing of Channelizing Devices (Feet) (G)
0 - 30	25
35 - 45	25
50	50 *
55	50 *
60 - 65	50 *
70 - 80	50 *

* Spacing is 40' for 42" cones.

Movable Concrete Barrier

Arrow Board Sequential Chevron

September 22, 2021

Published Date: 3rd Qtr. 2022	SDDOT	LANE CLOSURE WITH BARRIER	PLATE NUMBER 634.65
			Sheet 1 of 1

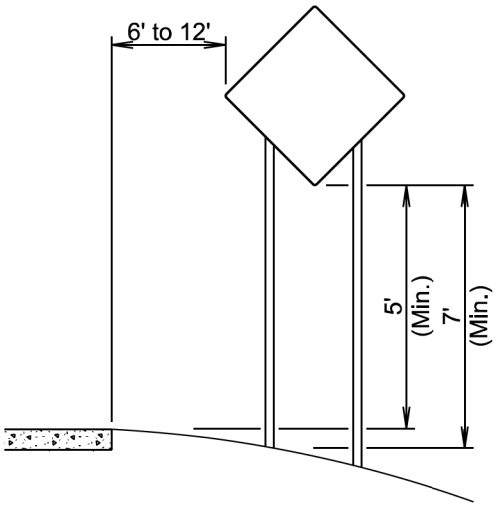

RURAL DISTRICT

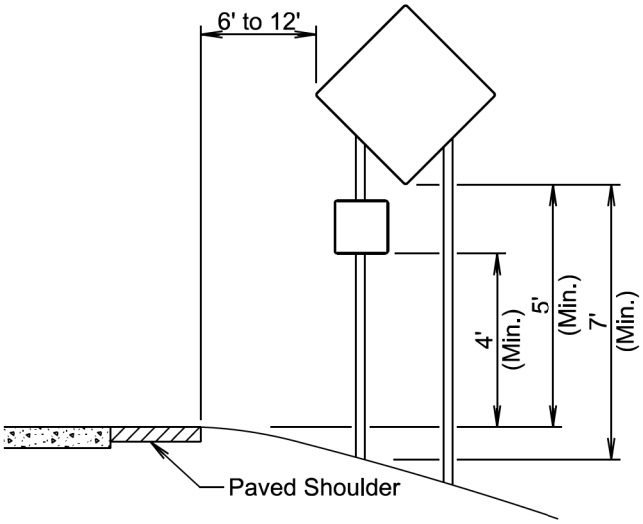

RURAL DISTRICT WITH SUPPLEMENTAL PLATE

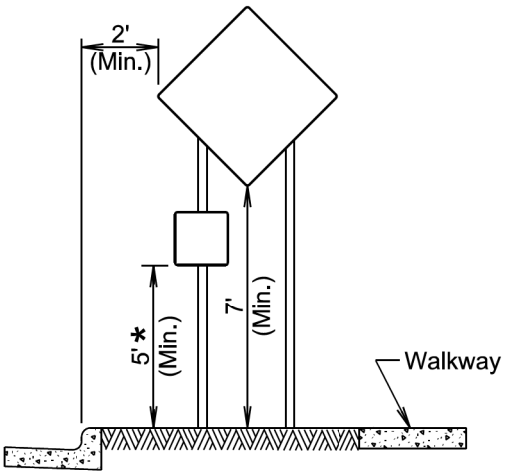

URBAN DISTRICT

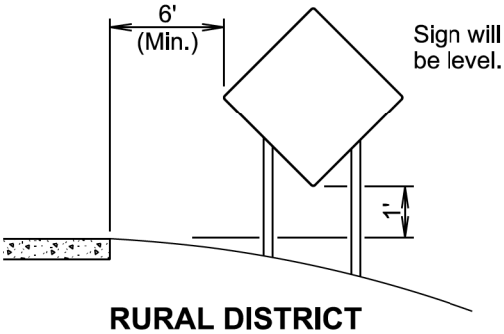

RURAL DISTRICT
3 DAY MAXIMUM
(Not applicable to regulatory signs)

* If the bottom of supplemental plate is mounted lower than 7 feet above a pedestrian walkway, the supplemental plate should not project more than 4" into the pedestrian facility.

January 22, 2021

Published Date: 3rd Qtr. 2022	SDDOT	CRASHWORTHY SIGN SUPPORTS (Typical Construction Signing)	PLATE NUMBER 634.85
			Sheet 1 of 1

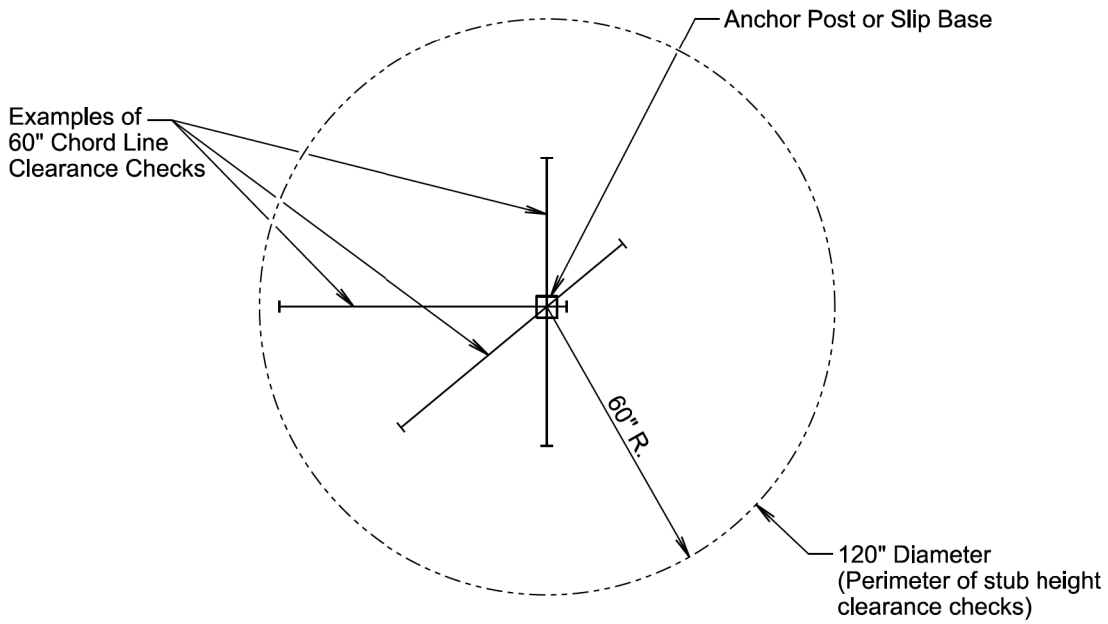

PLAN VIEW
(Examples of stub height clearance checks)

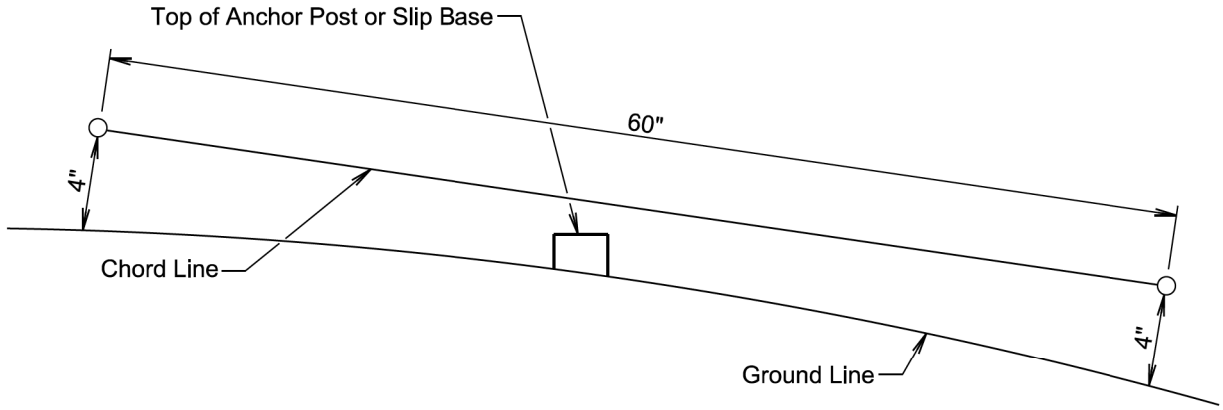

ELEVATION VIEW

GENERAL NOTES:

The top of anchor posts and slip bases WILL NOT extend above a 60" chord line within a 120" diameter circle around the post with ends 4" above the ground.

At locations where there is curb and gutter adjacent to the breakaway sign support, the stub height will be a maximum of 4" above the ground line at the localized area adjacent to the breakaway support stub.

The 4" stub height clearance is not necessary for U-channel lap splices where the support is designed to yield (bend) at the base.

January 22, 2021

Published Date: 3rd Qtr. 2022	SDDOT	BREAKAWAY SUPPORT STUB CLEARANCE	PLATE NUMBER 634.99 Sheet 1 of 1

GENERAL NOTES:

Either flanged channel steel posts or S3x5.7 steel I beam posts will be used, but post type will be consistent thoughout the project. The S3x5.7 steel I beam post will be used for the end posts.

All costs associated with furnishing and constructing the 3 cable guardrail anchor assembly including the concrete anchor, cable anchor bracket, compensating device, steel turnbuckle cable assembly, and necessary hardware will be incidental to the contract unit price per each for "3 Cable Guardrail Anchor Assembly".

All costs associated with furnishing and constructing the 3 cable guardrail including posts, cable, cable splices, and hardware will be incidental to the contract unit price per foot for "3 Cable Guardrail".

The following table and criteria will apply to the arrangement of the Spring Cable End Assemblies (Compensation Devices) and Turnbuckle Cable End Assemblies:

LENGTH OF CABLE RUN	CRITERIA FOR ARRANGEMENT OF THE SPRING CABLE END ASSEMBLIES (COMPENSATION DEVICES) AND TURNBUCKLE CABLE END ASSEMBLIES
Less than 500'	Use turnbuckle on the approaching traffic end and compensating device on the other end of each individual cable, except in the W Beam to 3 Cable Transition where all compensating devices will be provided at the bridge ends.
Greater than 500' to 1000'	Use compensating device on each end of each individual cable.
Greater than 1000'	Start new run by interlacing at last parallel post as shown on sheet 2 of 6.

All Compensating Devices will be attached to the cable anchor bracket when one end of the run is attached to a bridge.

Compensating Devices must have a spring rate of 450 ± 50 pounds per inch and will have a total available travel of 6 inches minimum.

The cable will be retensioned after the initial 2 week pretension period in accordance with the following table:

CABLE TENSIONING SPECIFICATIONS														
Temperature Range (Degree F)	-20 to -11	-10 to -1	0 to 9	10 to 19	20 to 29	30 to 39	40 to 49	50 to 59	60 to 69	70 to 79	80 to 89	90 to 99	100 to 109	110 to 120
Spring Compression (Inch)	4¼	4	3¾	3½	3¼	3	2¾	2½	2¼	2	1¾	1½	1¼	1

POST SPACING FOR HORIZONTAL CURVES	
Roadway ℄ Curvature	Maximum Post Spacing (Ft)
1° and Less	16
Greater than 1° to 8°	12
Greater than 8° to 13°	8
Greater than 13°	NOT ALLOWED

September 14, 2018

Published Date: 3rd Qtr. 2022

SDDOT

3 CABLE GUARDRAIL (LOW TENSION)

PLATE NUMBER 629.01

Sheet 1 of 6

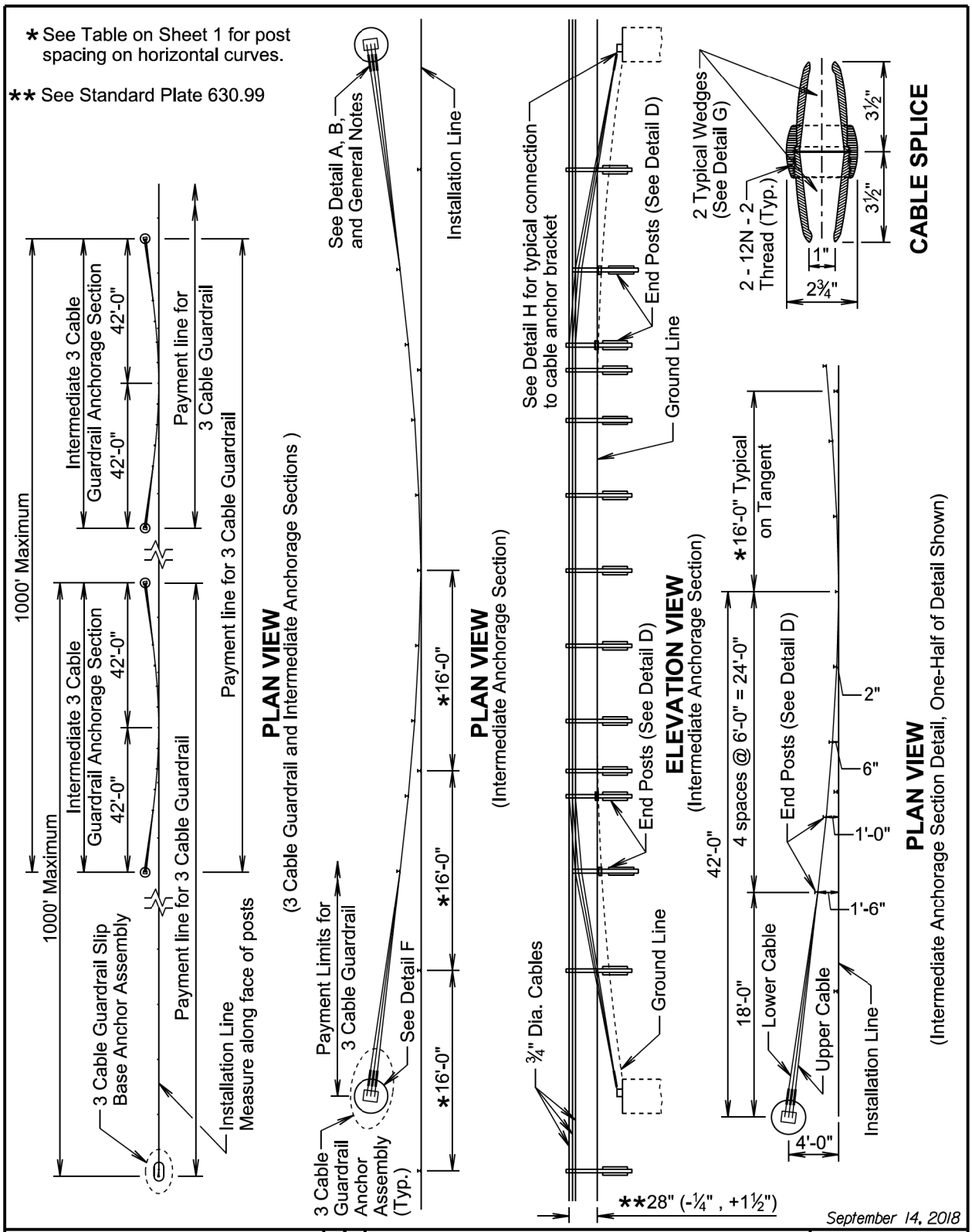

Published Date: 3rd Qtr. 2022

SDDOT

3 CABLE GUARDRAIL (LOW TENSION)

PLATE NUMBER 629.01

Sheet 2 of 6

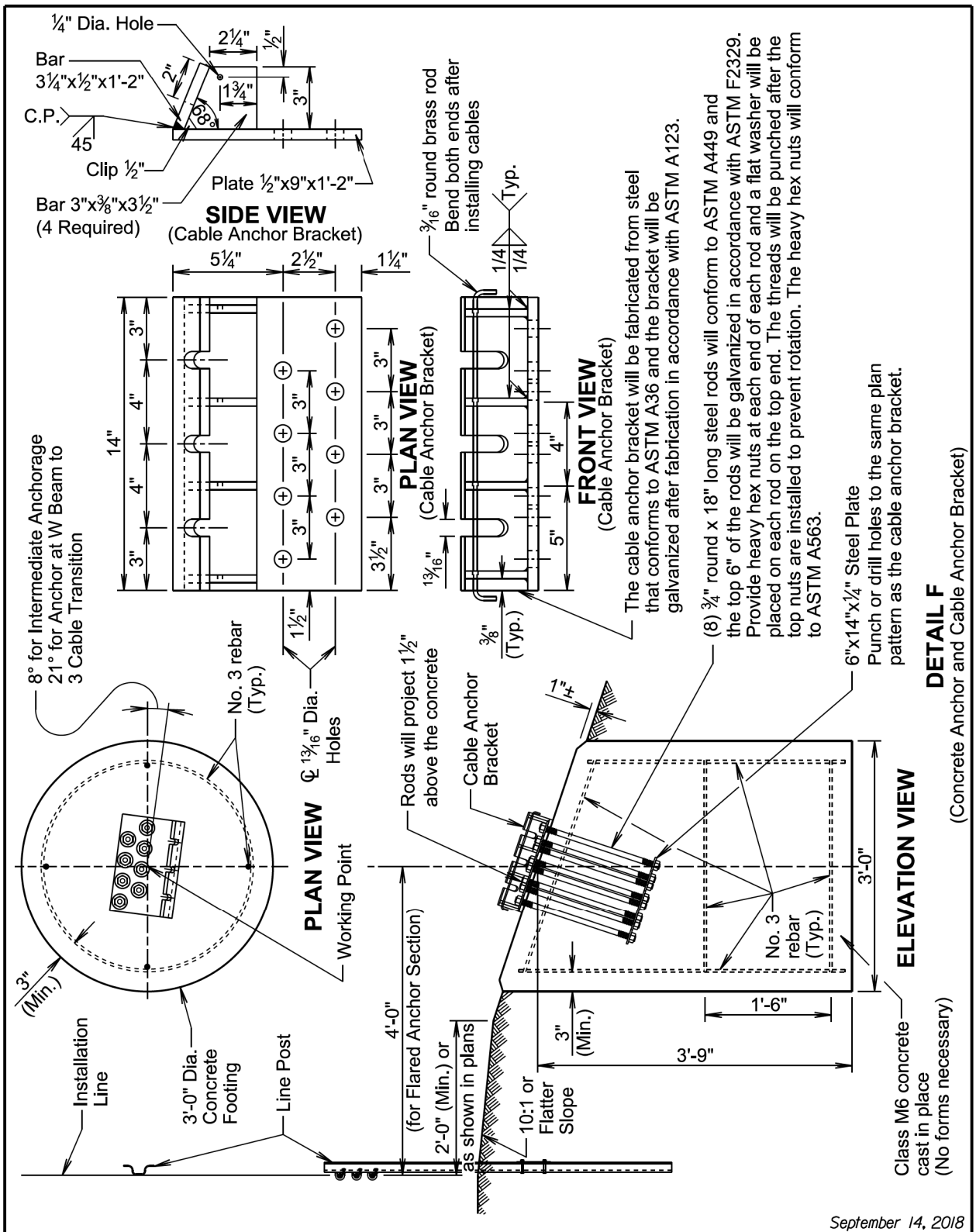

Published Date: 3rd Qtr. 2022	SDDOT	3 CABLE GUARDRAIL (LOW TENSION)	PLATE NUMBER 629.01 Sheet 3 of 6

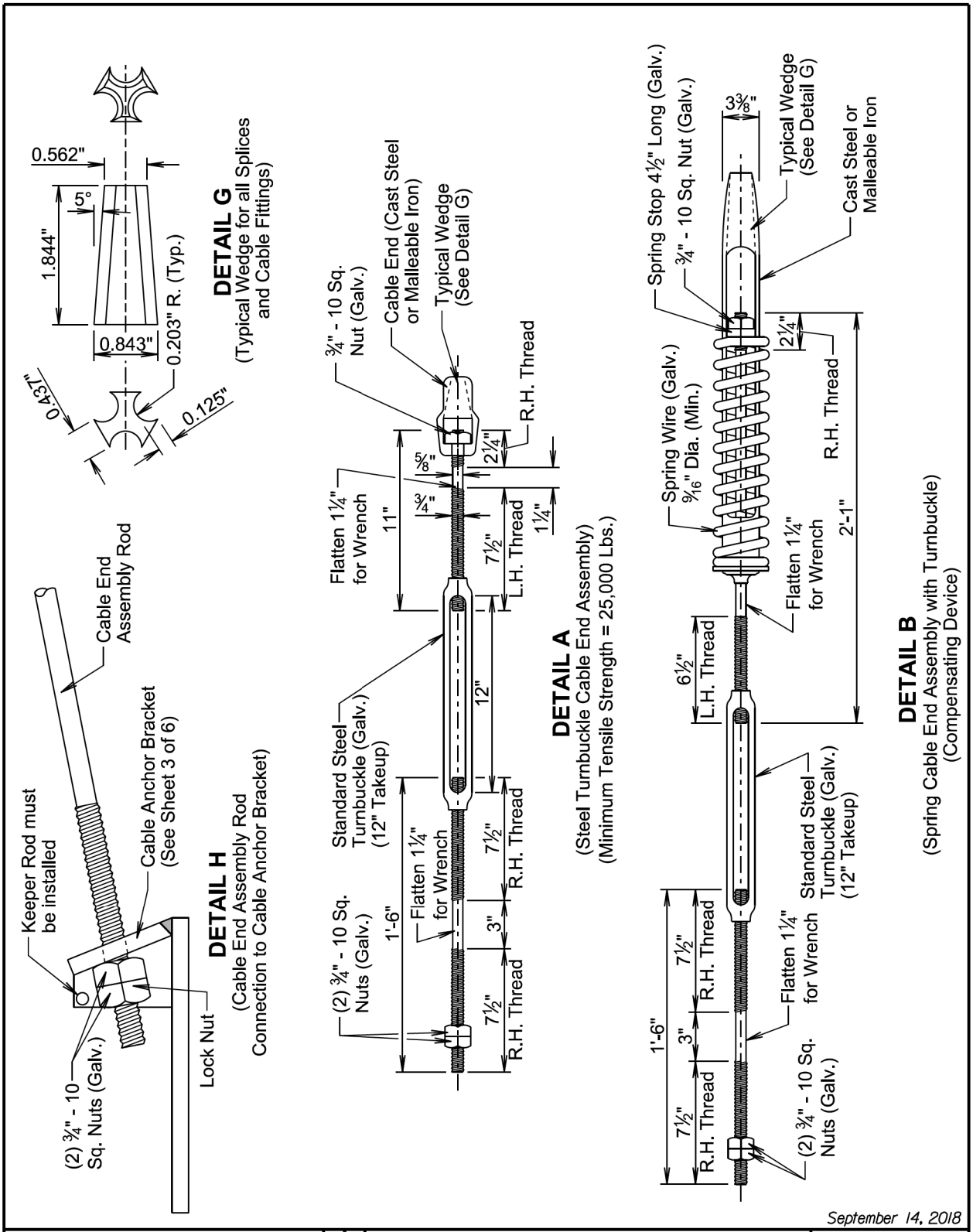

Published Date: 3rd Qtr. 2022	SDDOT	3 CABLE GUARDRAIL (LOW TENSION)	PLATE NUMBER 629.01 Sheet 4 of 6

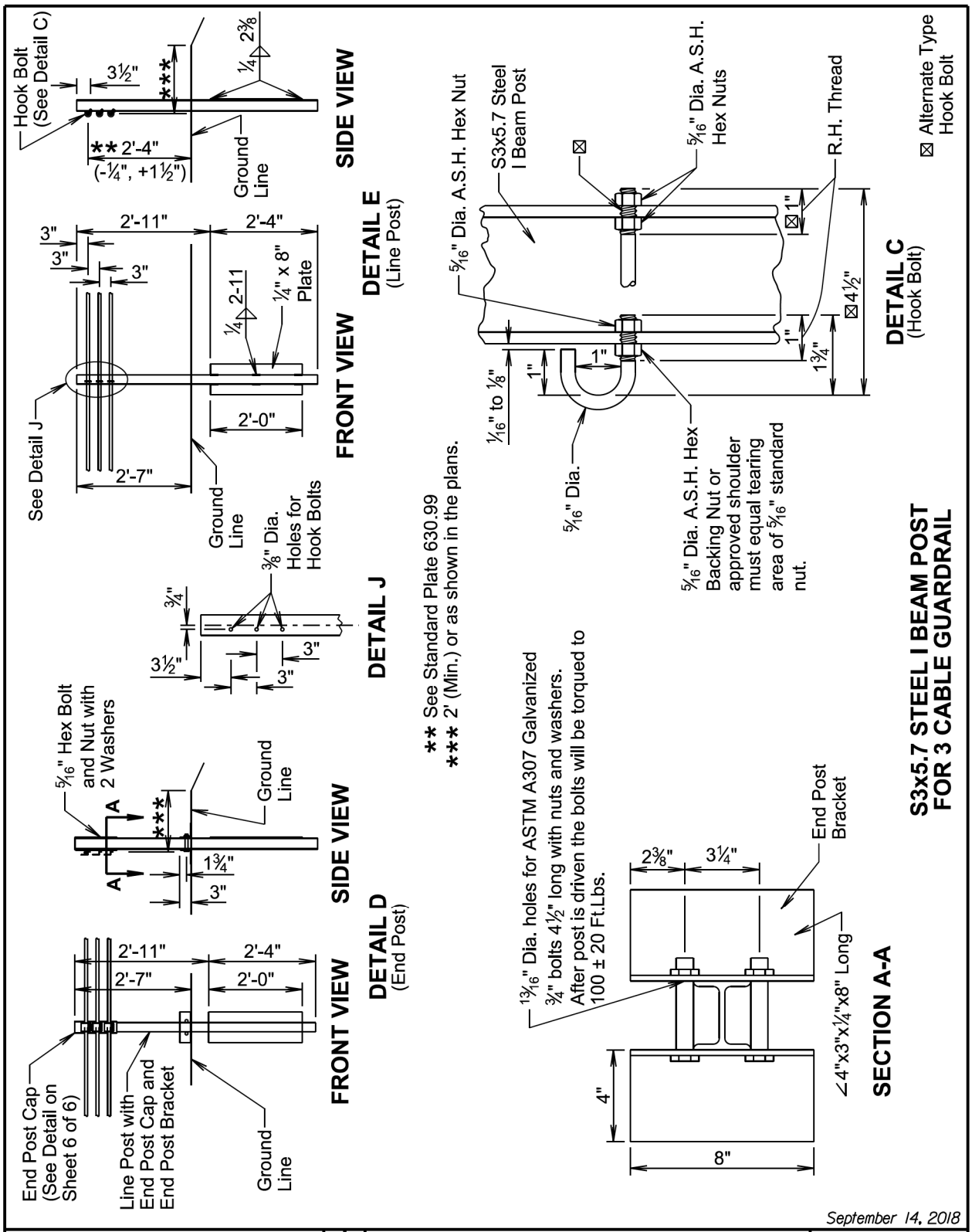
Hook Bolt (See Detail C)
3½"
***
** 2'-4" (-¼", +1½")
Ground Line
¼ 2⅜
SIDE VIEW
DETAIL E (Line Post)
2'-11"
2'-4"
3"
3"
3"
¼ 2-11
¼" x 8" Plate
See Detail J
2'-0"
2'-7"
Ground Line
FRONT VIEW
⅜" Dia. Holes for Hook Bolts
¾"
3½"
3"
3"
DETAIL J
5/16" Hex Bolt and Nut with 2 Washers
A
A
***
Ground Line
1¾"
3"
SIDE VIEW
DETAIL D (End Post)
2'-11"
2'-4"
2'-7"
2'-0"
End Post Cap (See Detail on Sheet 6 of 6)
Line Post with End Post Cap and End Post Bracket
Ground Line
FRONT VIEW
** See Standard Plate 630.99
*** 2' (Min.) or as shown in the plans.
5/16" Dia. A.S.H. Hex Nut
S3x5.7 Steel I Beam Post
5/16" Dia. A.S.H. Hex Nuts
R.H. Thread
⊠ Alternate Type Hook Bolt
⊠
⊠1"
⊠4½"
1"
1¾"
1"
1"
1/16" to ⅛"
5/16" Dia.
5/16" Dia. A.S.H. Hex Backing Nut or approved shoulder must equal tearing area of 5/16" standard nut.
DETAIL C (Hook Bolt)
S3x5.7 STEEL I BEAM POST FOR 3 CABLE GUARDRAIL
13/16" Dia. holes for ASTM A307 Galvanized ¾" bolts 4½" long with nuts and washers. After post is driven the bolts will be torqued to 100 ± 20 Ft.Lbs.
2⅜"
3¼"
End Post Bracket
4"
8"
∠4"x3"x¼"x8" Long
SECTION A-A
September 14, 2018
Published Date: 3rd Qtr. 2022
SDDOT
3 CABLE GUARDRAIL (LOW TENSION)
PLATE NUMBER 629.01
Sheet 5 of 6

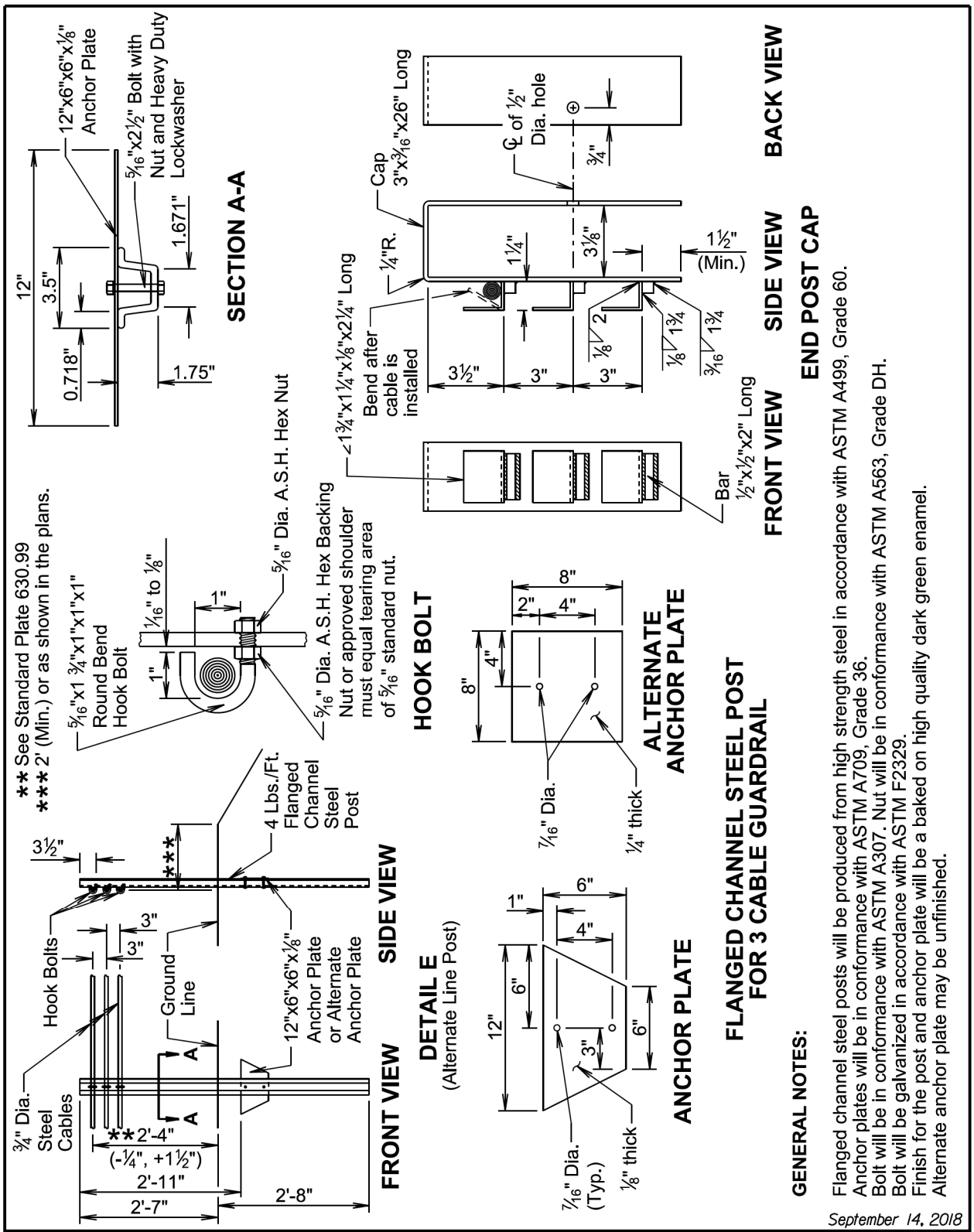
12"x6"x⅛" Anchor Plate
5/16"x2½" Bolt with Nut and Heavy Duty Lockwasher
12"
3.5"
0.718"
1.671"
1.75"
SECTION A-A
Cap 3"x3/16"x26" Long
℄ of ½" Dia. hole
¼"R.
1¼"
3⅛"
¾"
1½" (Min.)
Bend after cable is installed
3½"
3"
3"
⅛ 2
⅛ 1¾
3/16 1¾
SIDE VIEW
BACK VIEW
∠1¾"x1¼"x⅛"x2¼" Long
Bar ½"x½"x2" Long
FRONT VIEW
END POST CAP
** See Standard Plate 630.99
*** 2' (Min.) or as shown in the plans.
5/16"x1 ¾"x1"x1"x1" Round Bend Hook Bolt
1/16" to ⅛"
1"
1"
5/16" Dia. A.S.H. Hex Nut
5/16" Dia. A.S.H. Hex Backing Nut or approved shoulder must equal tearing area of 5/16" standard nut.
HOOK BOLT
8"
2"
4"
4"
8"
7/16" Dia.
¼" thick
ALTERNATE ANCHOR PLATE
3½"
***
4 Lbs./Ft. Flanged Channel Steel Post
Hook Bolts
3"
3"
Ground Line
12"x6"x⅛" Anchor Plate or Alternate Anchor Plate
SIDE VIEW
¾" Dia. Steel Cables
A
A
**2'-4"
(-¼", +1½")
2'-11"
2'-7"
2'-8"
FRONT VIEW
DETAIL E
(Alternate Line Post)
1"
6"
4"
12"
6"
3"
6"
7/16" Dia. (Typ.)
⅛" thick
ANCHOR PLATE
FLANGED CHANNEL STEEL POST FOR 3 CABLE GUARDRAIL
GENERAL NOTES:
Flanged channel steel posts will be produced from high strength steel in accordance with ASTM A499, Grade 60.
Anchor plates will be in conformance with ASTM A709, Grade 36.
Bolt will be in conformance with ASTM A307. Nut will be in conformance with ASTM A563, Grade DH.
Bolt will be galvanized in accordance with ASTM F2329.
Finish for the post and anchor plate will be a baked on high quality dark green enamel.
Alternate anchor plate may be unfinished.
September 14, 2018
Published Date: 3rd Qtr. 2022
SDDOT
3 CABLE GUARDRAIL (LOW TENSION)
PLATE NUMBER
629.01
Sheet 6 of 6

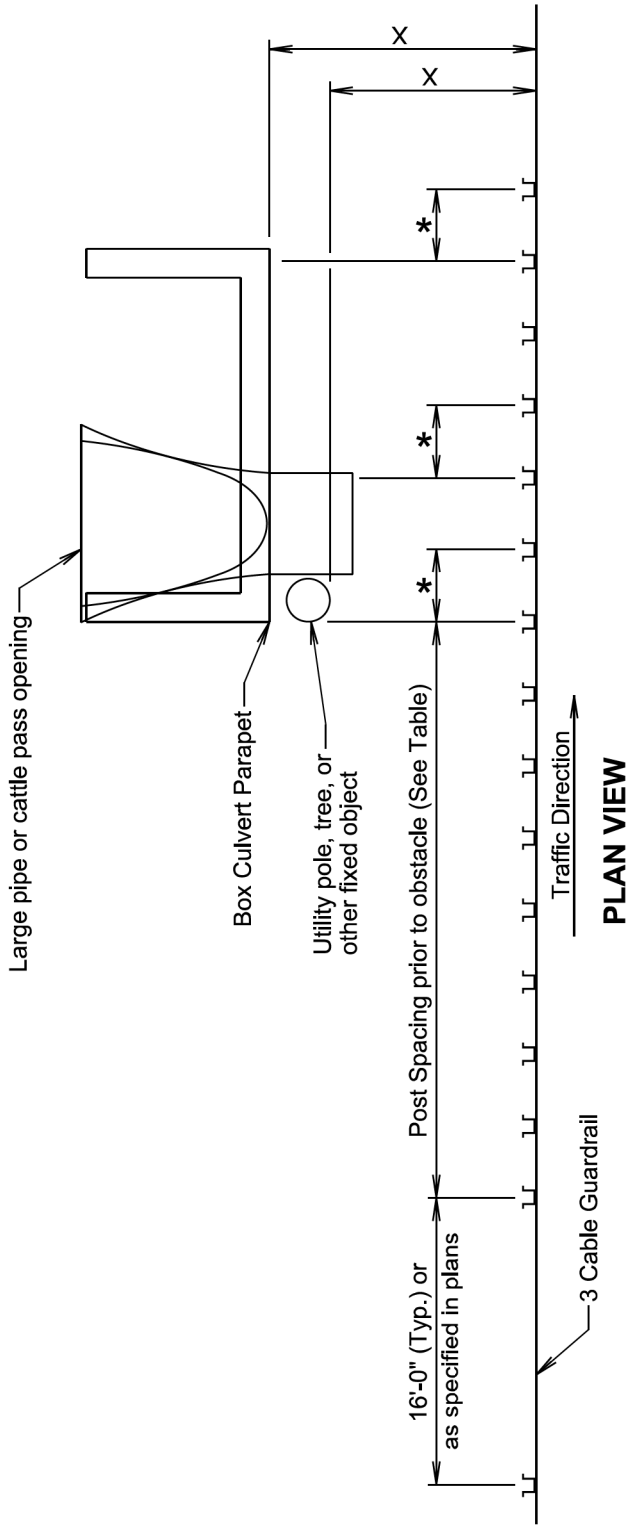

PLAN VIEW

POST SPACING PRIOR TO OBSTACLE		
X Deflection Distance (Ft.)	Number of Post Spaces	Post Spacing (Ft.)
10.5 to 11.4	8	4
11.5 to 12.9	6	8
13.0 to 14.9	4	12
15 and Greater	3	16

GENERAL NOTES:

* Post spacing for deflection control will continue to one post past the obstacle for one-way traffic.

Post spacing for deflection control will be provided on both sides of the obstacle for two-way traffic.

For illustrational purposes, the 3 cable guardrail posts and post spacings shown on this standard plate depict the situation when there is a box culvert 10.5' to 11.49' away from the 3 cable guardrail and the traffic is one-way.

This standard plate will not be used for high tension cable guardrail installations.

September 14, 2018

Published Date: 3rd Qtr. 2022	SDDOT	3 CABLE GUARDRAIL (LOW TENSION) POST SPACING FOR DEFLECTION CONTROL	PLATE NUMBER 629.02
			Sheet 1 of 1

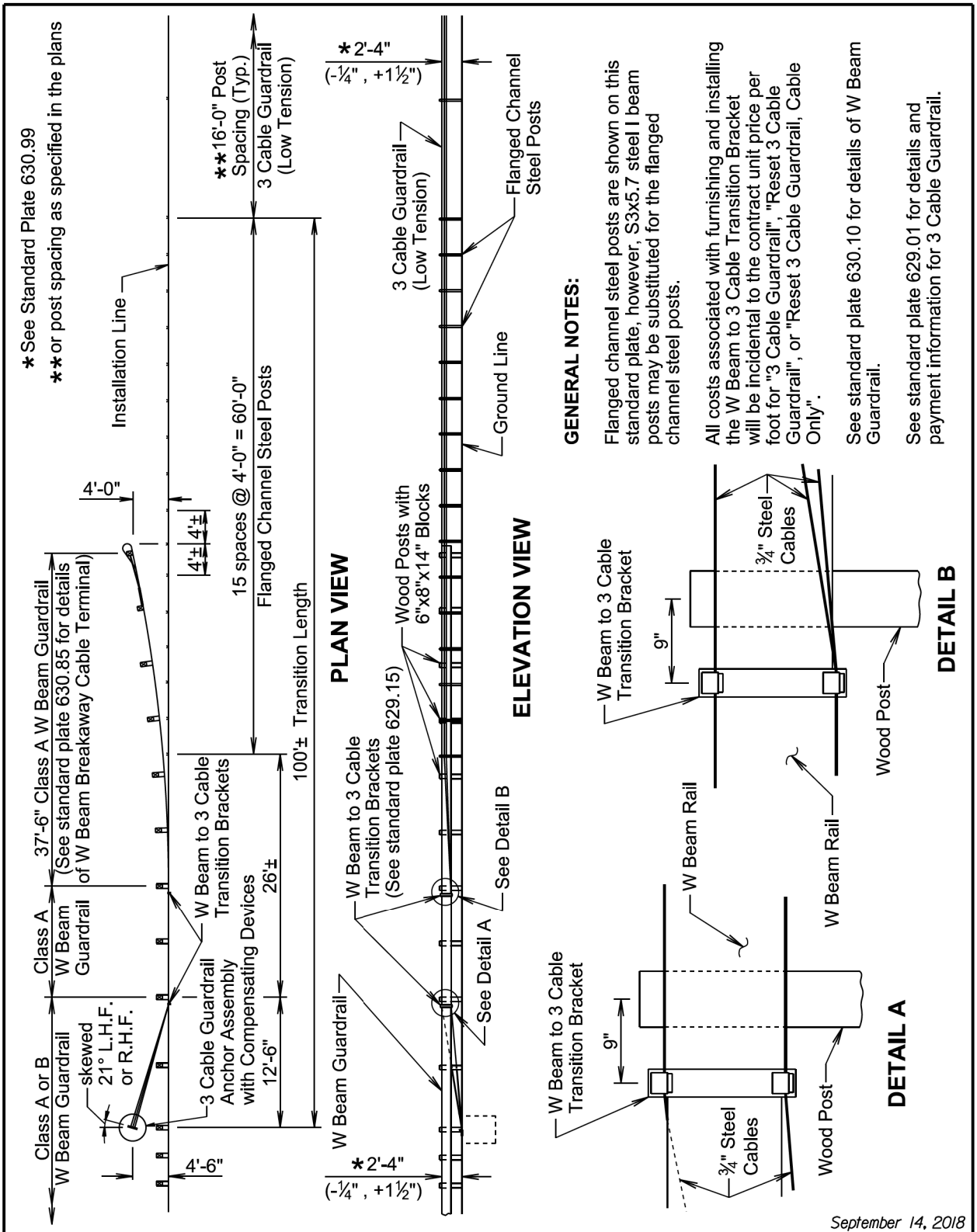
* See Standard Plate 630.99
** or post spacing as specified in the plans
Installation Line
4'-0"
4'± 4'±
37'-6" Class A W Beam Guardrail
(See standard plate 630.85 for details of W Beam Breakaway Cable Terminal)
Class A W Beam Guardrail
Class A or B W Beam Guardrail
skewed 21° L.H.F. or R.H.F.
3 Cable Guardrail Anchor Assembly with Compensating Devices
12'-6"
W Beam to 3 Cable Transition Brackets
26'±
4'-6"
15 spaces @ 4'-0" = 60'-0"
Flanged Channel Steel Posts
100'± Transition Length
**16'-0" Post Spacing (Typ.)
3 Cable Guardrail (Low Tension)
PLAN VIEW
*2'-4"
(-¼", +1½")
W Beam Guardrail
W Beam to 3 Cable Transition Brackets
(See standard plate 629.15)
Wood Posts with 6"x8"x14" Blocks
See Detail A
See Detail B
3 Cable Guardrail (Low Tension)
Flanged Channel Steel Posts
Ground Line
ELEVATION VIEW
GENERAL NOTES:
Flanged channel steel posts are shown on this standard plate, however, S3x5.7 steel I beam posts may be substituted for the flanged channel steel posts.
All costs associated with furnishing and installing the W Beam to 3 Cable Transition Bracket will be incidental to the contract unit price per foot for "3 Cable Guardrail", "Reset 3 Cable Guardrail", or "Reset 3 Cable Guardrail, Cable Only".
See standard plate 630.10 for details of W Beam Guardrail.
See standard plate 629.01 for details and payment information for 3 Cable Guardrail.
W Beam to 3 Cable Transition Bracket
9"
¾" Steel Cables
Wood Post
W Beam Rail
DETAIL A
DETAIL B
September 14, 2018
Published Date: 3rd Qtr. 2022
SDDOT
W BEAM TO 3 CABLE TRANSITION
PLATE NUMBER
629.05
Sheet 1 of 1

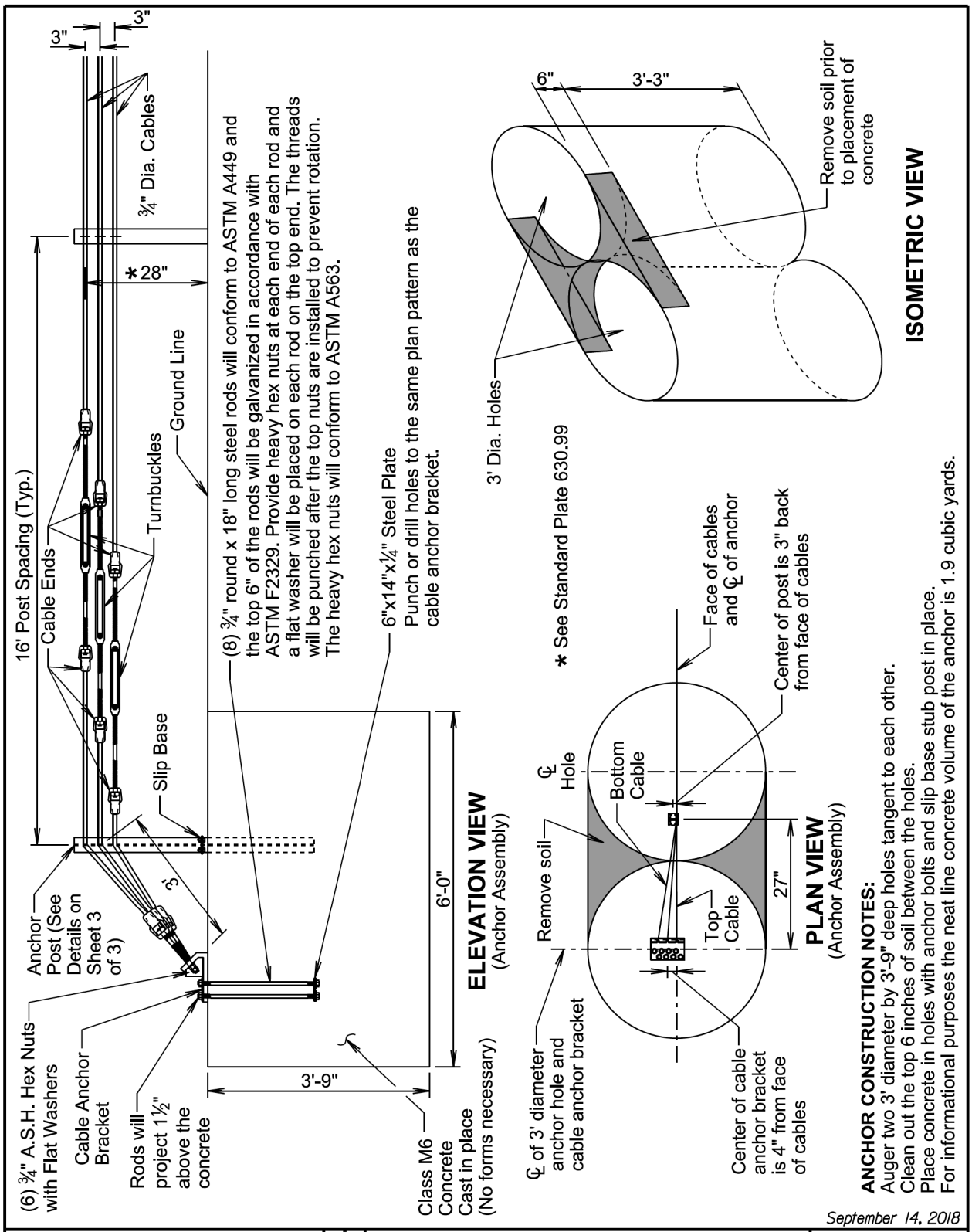

Published Date: 3rd Qtr. 2022	SDDOT	3 CABLE GUARDRAIL SLIP BASE ANCHOR ASSEMBLY	PLATE NUMBER 629.10 Sheet 1 of 3

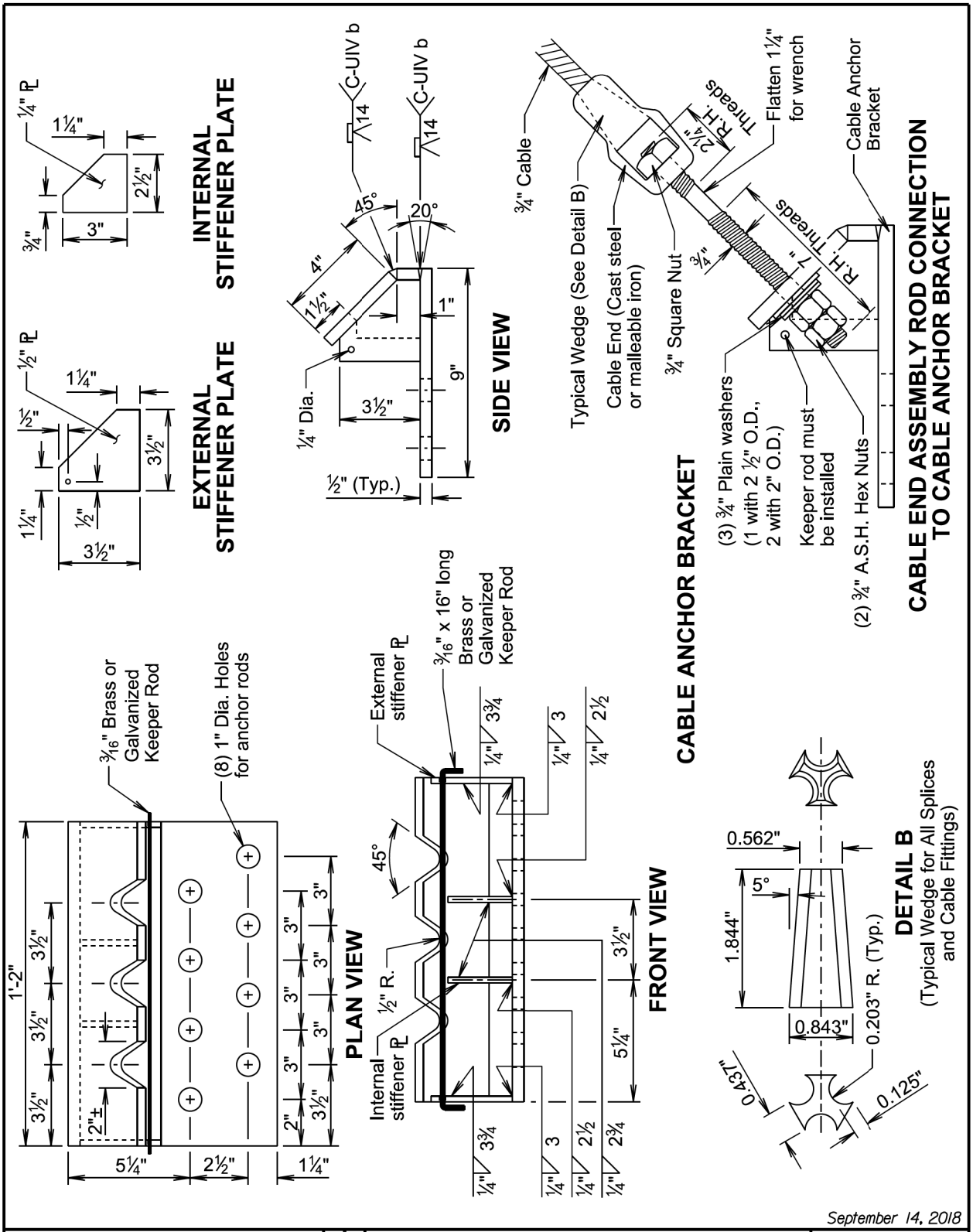

September 14, 2018

Published Date: 3rd Qtr. 2022	SDDOT	3 CABLE GUARDRAIL SLIP BASE ANCHOR ASSEMBLY	PLATE NUMBER 629.10 Sheet 2 of 3

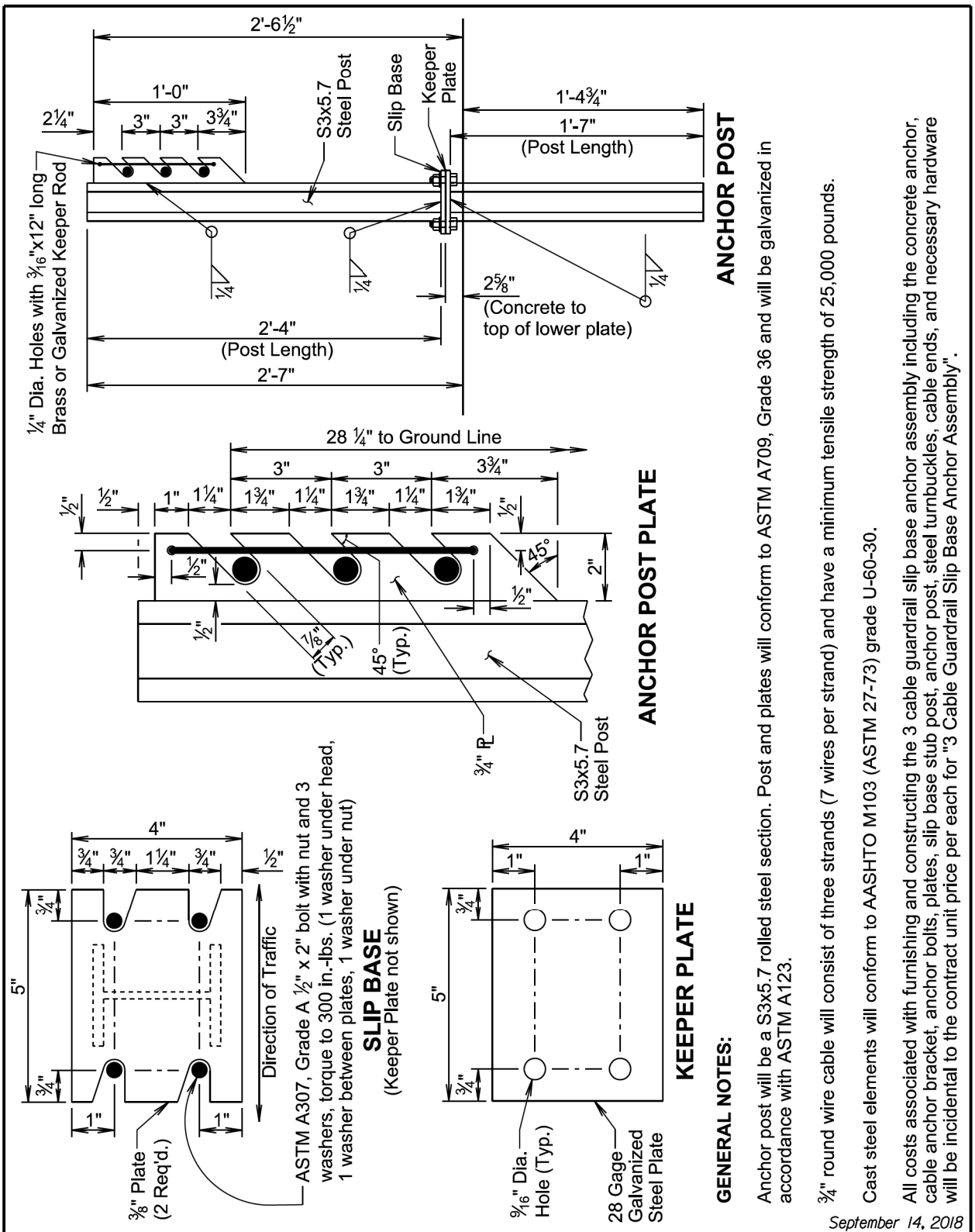
2'-6½"
1'-0"
2¼"
3"
3"
3¾"
S3x5.7 Steel Post
Slip Base
Keeper Plate
1'-4¾"
1'-7"
(Post Length)
¼" Dia. Holes with 3/16"x12" long Brass or Galvanized Keeper Rod
¼
¼
¼
2⅝"
(Concrete to top of lower plate)
2'-4"
(Post Length)
2'-7"
ANCHOR POST
28 ¼" to Ground Line
3"
3"
3¾"
½"
½"
1"
1¼"
1¾"
1¼"
1¾"
1¼"
1¾"
½"
½"
½"
½"
45°
2"
7/8" (Typ.)
45° (Typ.)
¾" R
S3x5.7 Steel Post
ANCHOR POST PLATE
4"
¾"
¾"
1¼"
¾"
½"
¾"
¾"
5"
1"
1"
Direction of Traffic
⅜" Plate (2 Req'd.)
ASTM A307, Grade A ½" x 2" bolt with nut and 3 washers, torque to 300 in.-lbs. (1 washer under head, 1 washer between plates, 1 washer under nut)
SLIP BASE
(Keeper Plate not shown)
4"
1"
1"
¾"
¾"
5"
9/16" Dia. Hole (Typ.)
28 Gage Galvanized Steel Plate
KEEPER PLATE
GENERAL NOTES:
Anchor post will be a S3x5.7 rolled steel section. Post and plates will conform to ASTM A709, Grade 36 and will be galvanized in accordance with ASTM A123.
¾" round wire cable will consist of three strands (7 wires per strand) and have a minimum tensile strength of 25,000 pounds.
Cast steel elements will conform to AASHTO M103 (ASTM 27-73) grade U-60-30.
All costs associated with furnishing and constructing the 3 cable guardrail slip base anchor assembly including the concrete anchor, cable anchor bracket, anchor bolts, plates, slip base stub post, anchor post, steel turnbuckles, cable ends, and necessary hardware will be incidental to the contract unit price per each for "3 Cable Guardrail Slip Base Anchor Assembly".
September 14, 2018
Published Date: 3rd Qtr. 2022
SDDOT
3 CABLE GUARDRAIL SLIP BASE ANCHOR ASSEMBLY
PLATE NUMBER
629.10
Sheet 3 of 3

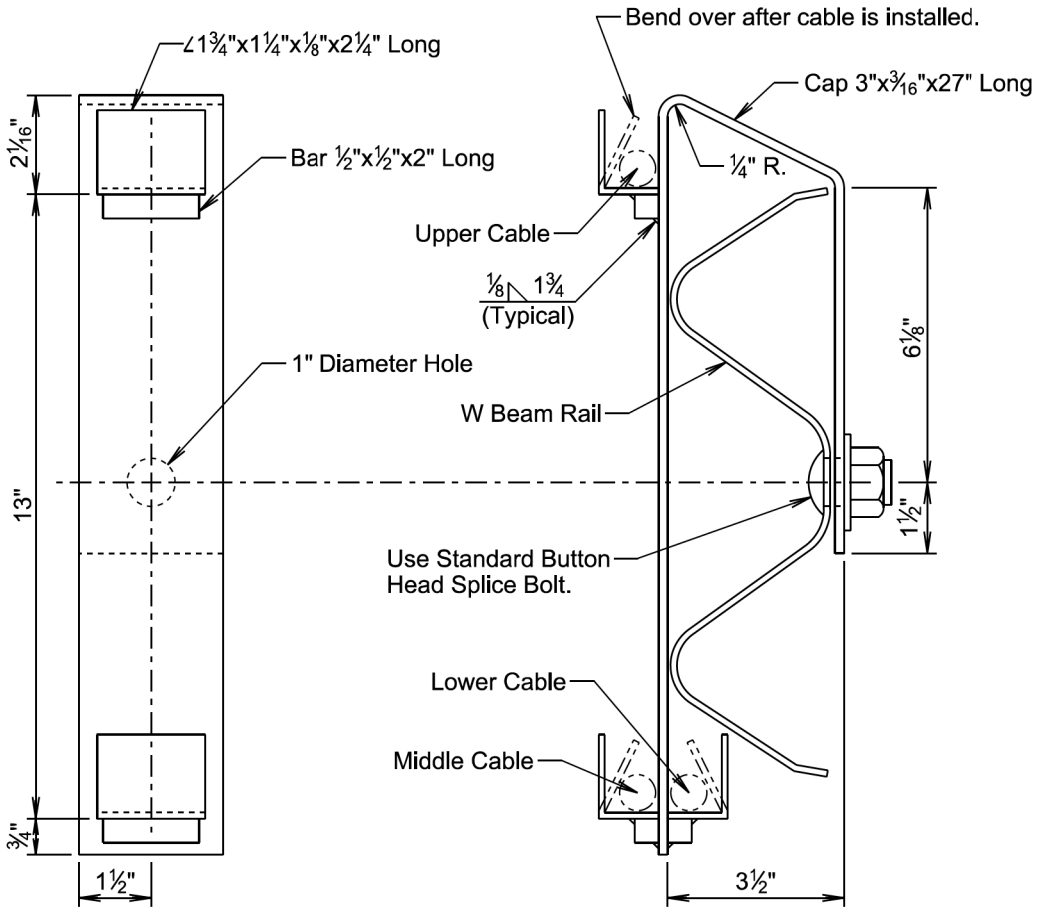

ELEVATION VIEW
(Transition Bracket)

END VIEW
(W Beam Rail and Transition Bracket)

GENERAL NOTES:

Steel used in the fabrication of the bracket will conform to ASTM A36 and the bracket will be galvanized after fabrication in accordance with ASTM A123.

September 14, 2018

Published Date: 3rd Qtr. 2022	SDDOT	W BEAM TO 3 CABLE TRANSITION BRACKET	PLATE NUMBER 629.15 Sheet 1 of 1

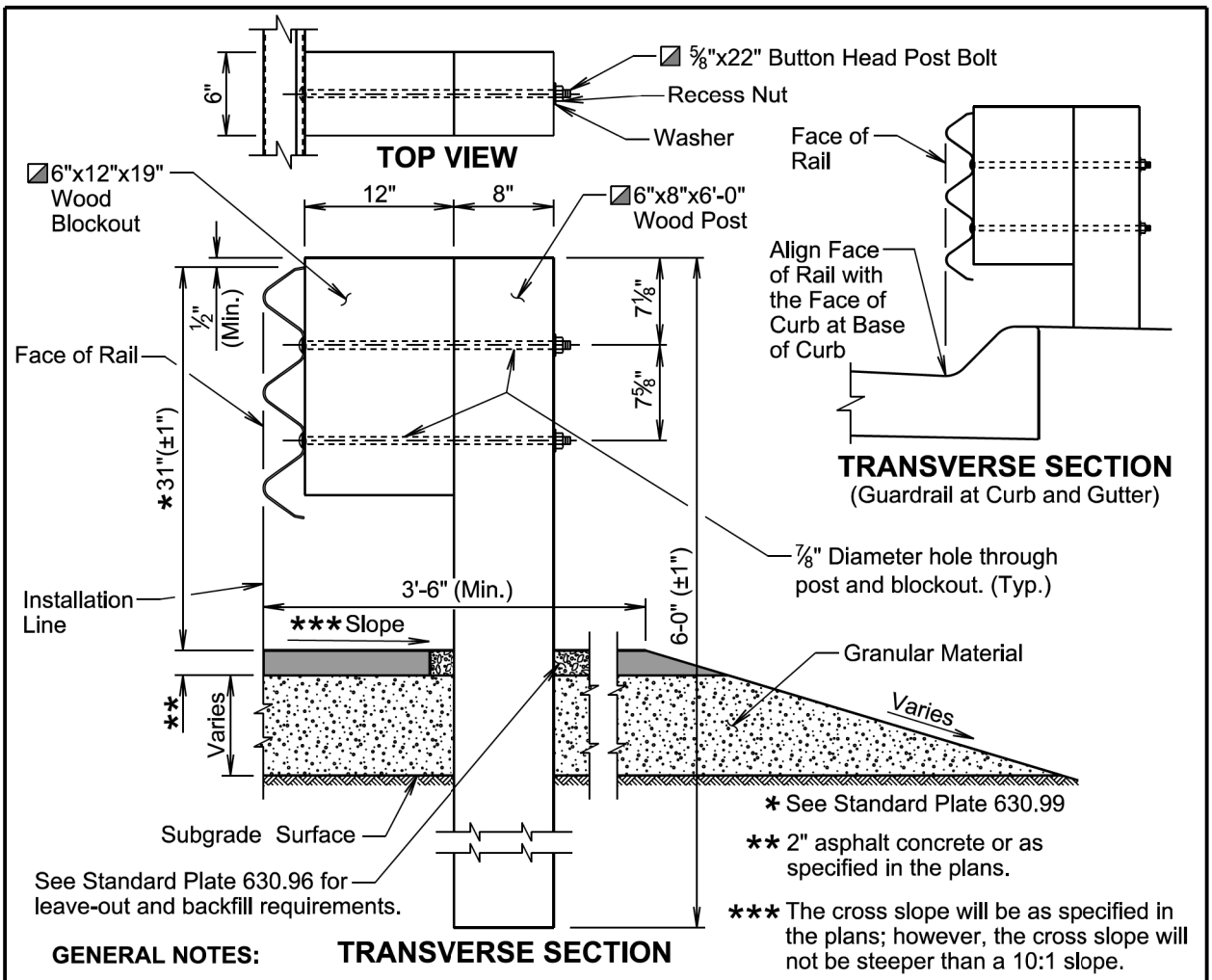

GENERAL NOTES:

Asphalt concrete will be the same type used elsewhere on the project or will be as specified in the plans. If asphalt concrete is not specified in the plans, the asphalt concrete will conform to the Specifications for "Asphalt Concrete Composite."

Granular material will be the same type used elsewhere on the project or will be as specified in the plans. If granular material type is not specified in the plans, the material will conform to the Specifications for "Base Course". The granular material will be placed the same thickness as the mainline surfacing or as specified in the plans.

Topsoil is not shown in the transverse section drawing.

◪ The post and blockout illustrated above is typical for single thrie beam guardrail. When other variations of posts and blockouts are specified on other standard plates (e.g. transitions) then the posts and blockouts will be as specified on the other standard plates or as specified in the plans.

Slots in the rails will be provided as specified in the plans and by the manufacturer. A drilled hole through the rail is not allowed as a replacement for a slot. If the Contractor must create a slot, a cutting torch or plasma cutter is not allowed. The slot edges will be smooth and free of burrs or notches.

The top of post and top of block will have a true square cut. The top of block will be a maximum of ±½ inch from the top of the post.

September 14, 2019

Published Date: 3rd Qtr. 2022	SDDOT	THRIE BEAM GUARDRAIL	PLATE NUMBER 630.01 Sheet 1 of 5

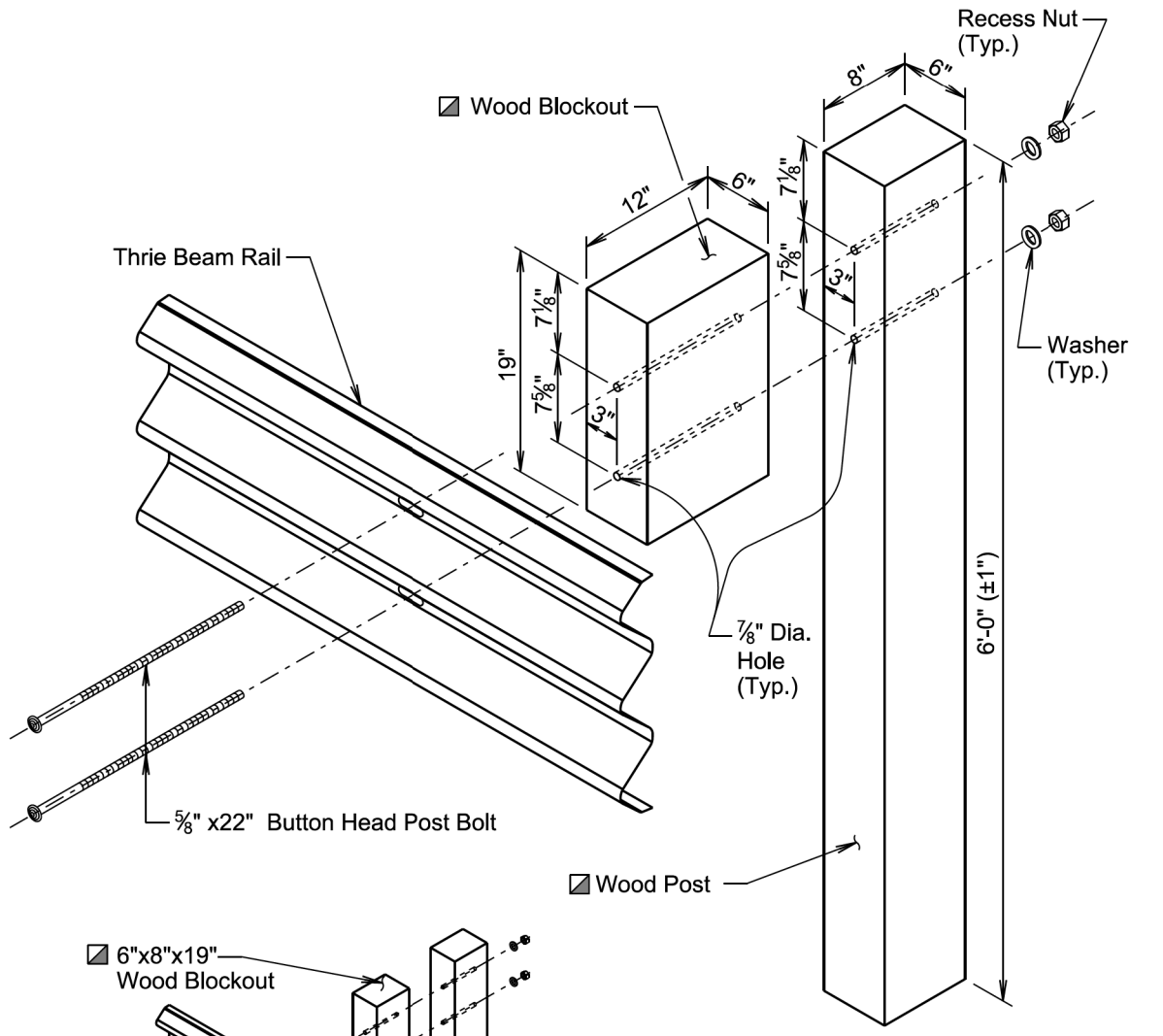

EXPANDED ISOMETRIC VIEW AT MIDSPAN OF THRIE BEAM GUARDRAIL

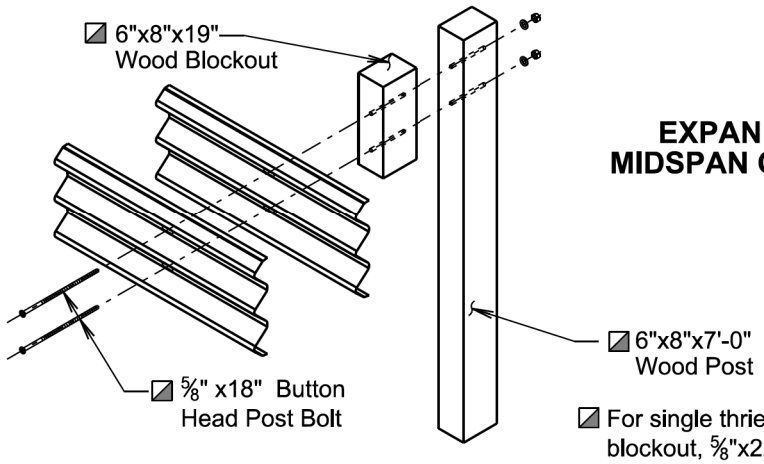

EXPANDED ISOMETRIC VIEW OF DOUBLE (NESTED) THRIE BEAM GUARDRAIL AT MIDSPAN
(For Information Only, Not to Scale)

For single thrie beam guardrail use 6"x12"x19" wood blockout, 5/8"x22" button head post bolt, and 6"x8"x6'-0" wood post. For double (nested) thrie beam guardrail use 6"x8"x19" wood blockout, 5/8"x18" button head post bolt, and 6"x8"x7'-0" wood post.

September 14, 2019

Published Date: 3rd Qtr. 2022	SDDOT	THRIE BEAM GUARDRAIL	PLATE NUMBER 630.01 Sheet 2 of 5

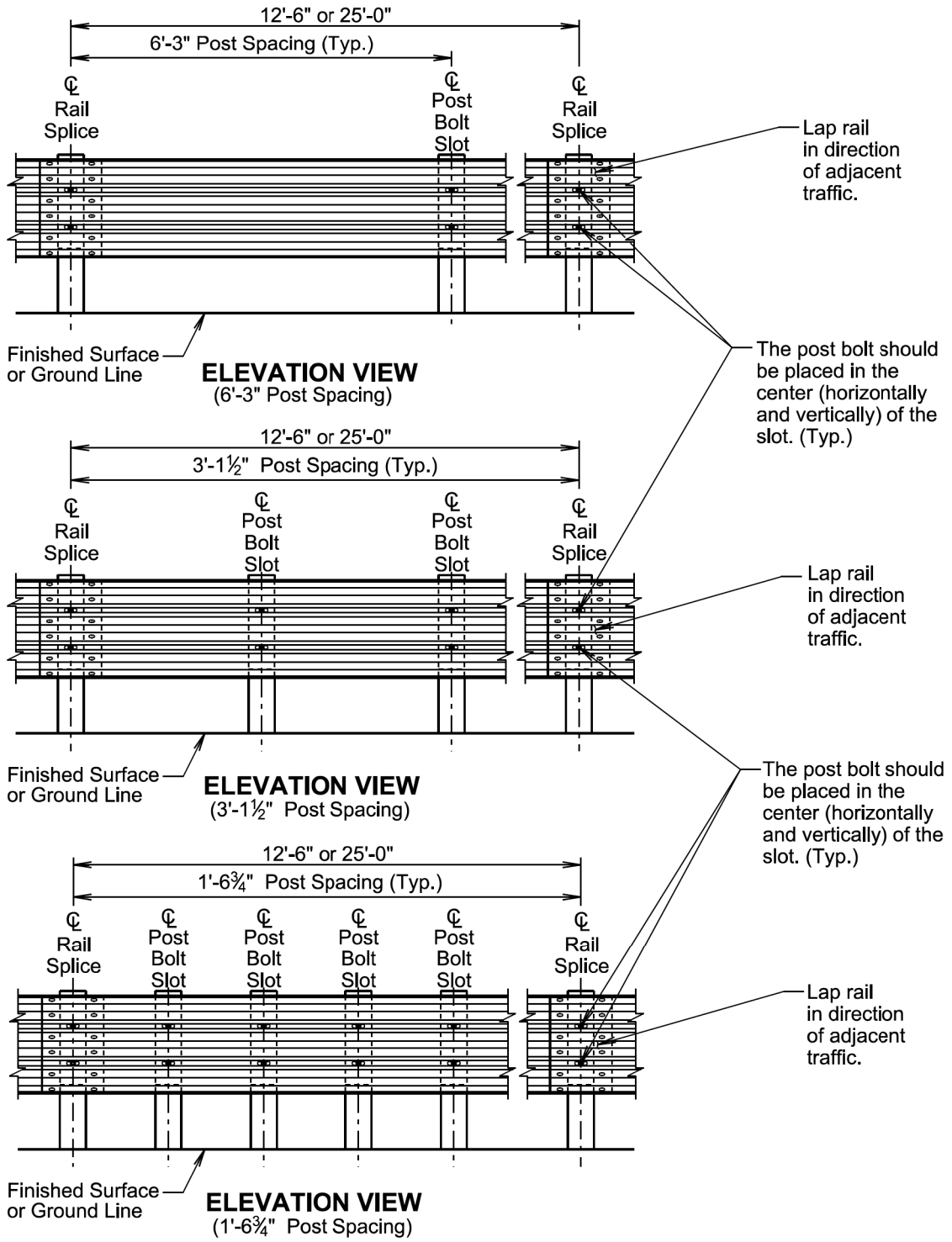

September 14, 2019

Published Date: 3rd Qtr. 2022	SDDOT	THRIE BEAM GUARDRAIL	PLATE NUMBER 630.01 Sheet 3 of 5

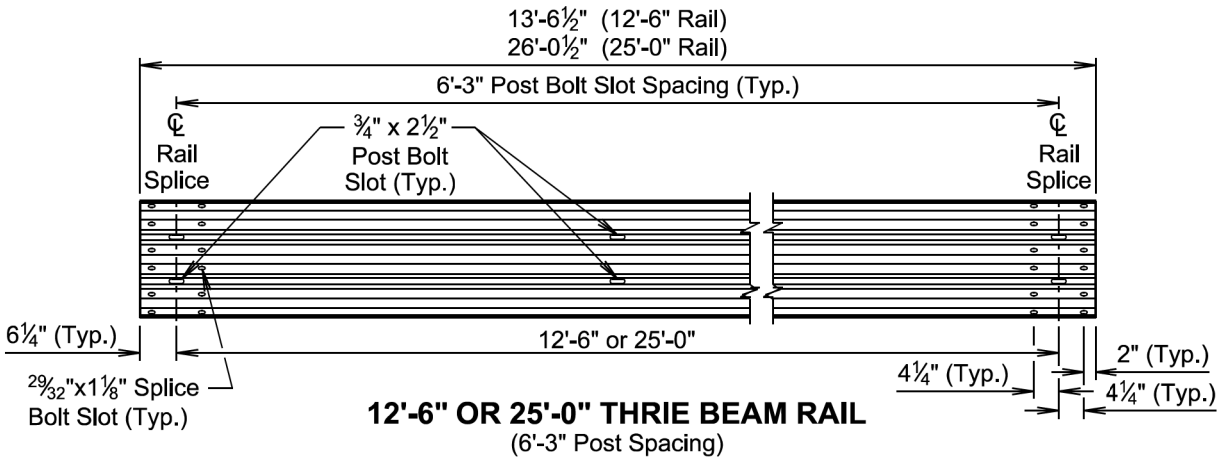

12'-6" OR 25'-0" THRIE BEAM RAIL
(6'-3" Post Spacing)

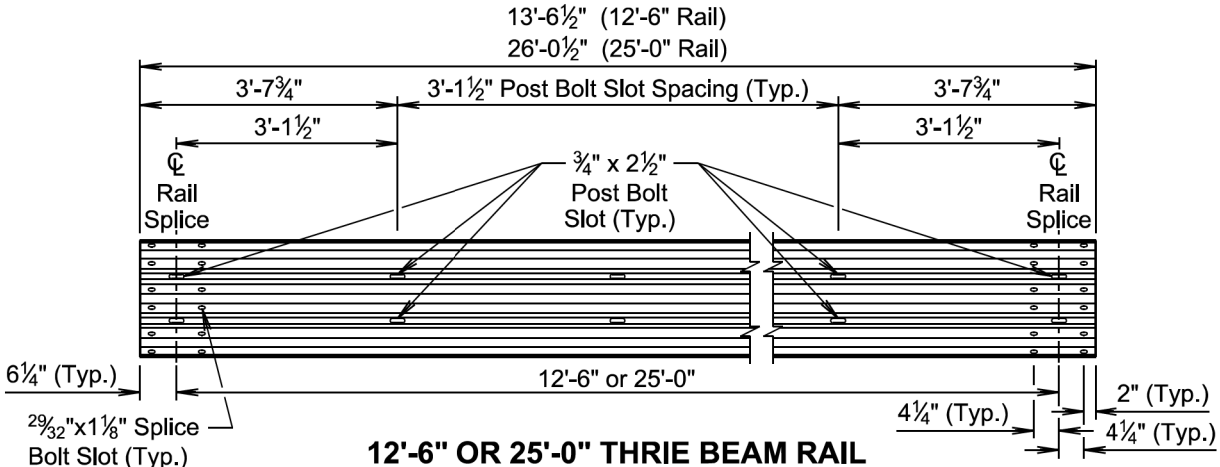

12'-6" OR 25'-0" THRIE BEAM RAIL
(3'-1½" Post Spacing)

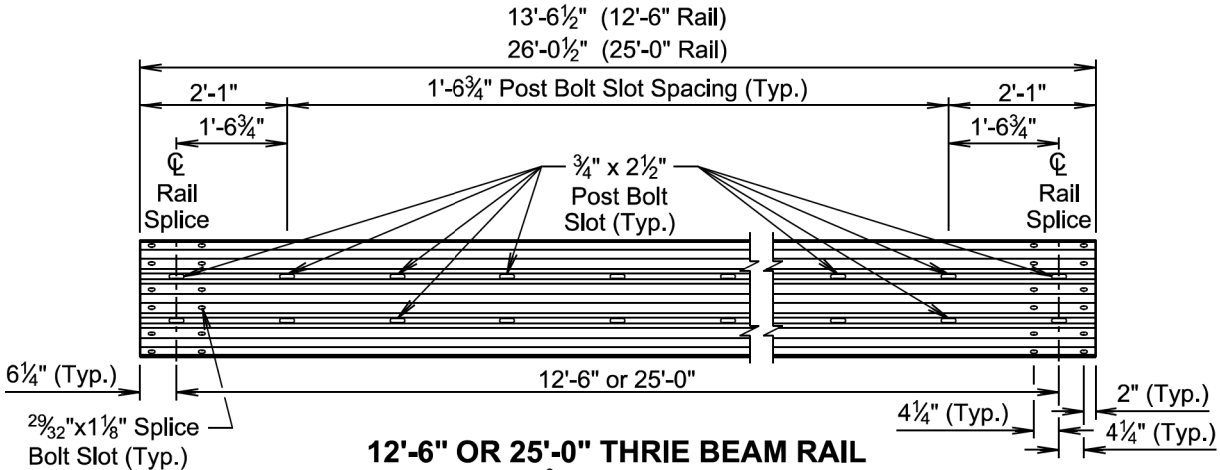

12'-6" OR 25'-0" THRIE BEAM RAIL
(1'-6¾" Post Spacing)

September 14, 2019

Published Date: 3rd Qtr. 2022	SDDOT	THRIE BEAM GUARDRAIL	PLATE NUMBER 630.01 Sheet 4 of 5

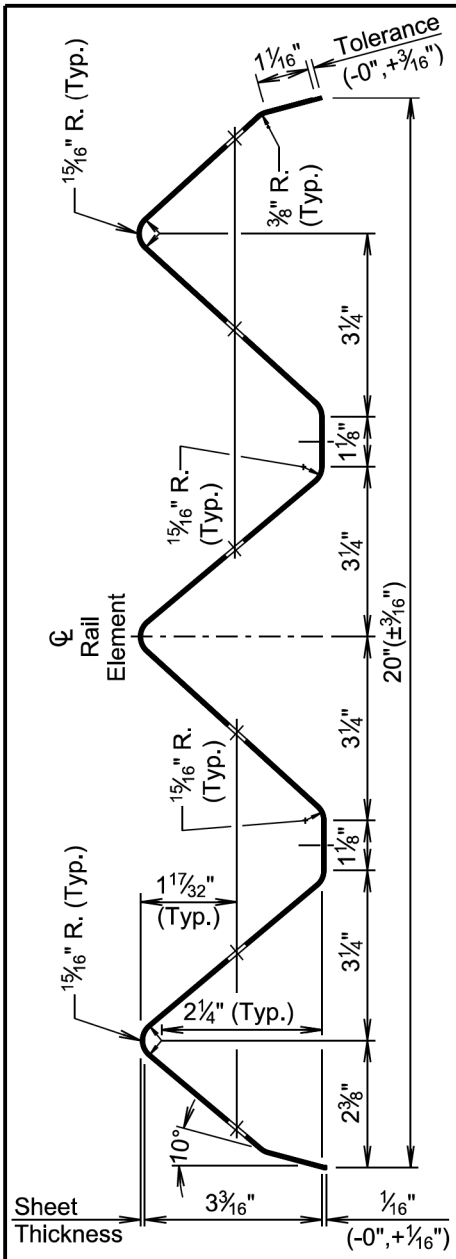

SECTION THROUGH THRIE BEAM RAIL

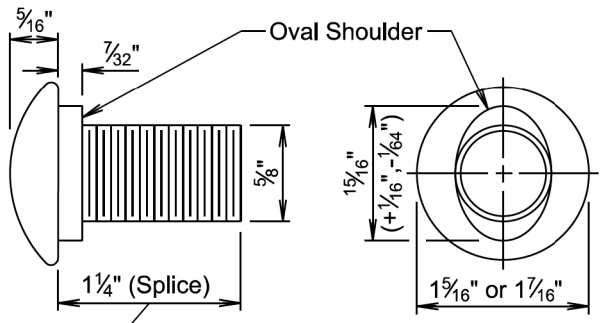

SPLICE BOLT AND POST BOLT
(5/8" Button Head Bolt)

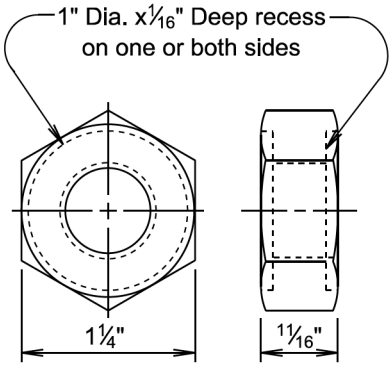

RECESS NUT
(At lap splices, the recess will be placed against the steel rail.)

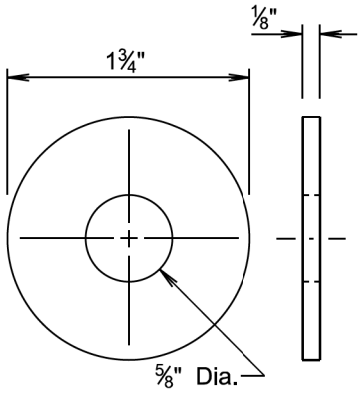

WASHER
(The washer will be placed between the back side of wood post and the recess nut, see sheet 1 and 2.)

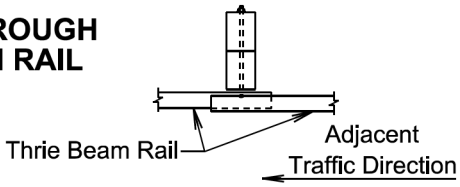

PLAN VIEW
(Lap Splice)
(Lap rail in direction of adjacent traffic.)
(12 splice bolts and 12 recess nuts per splice, NO washers)

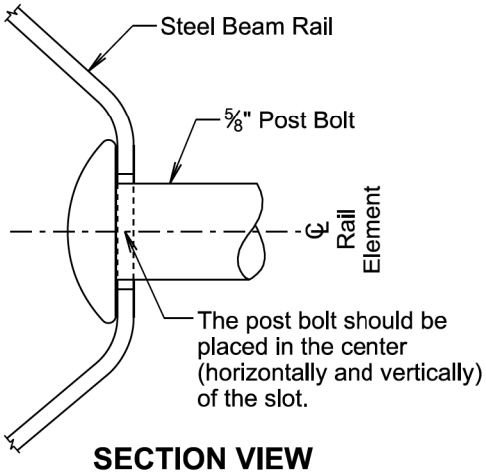

SECTION VIEW
(At Post Bolt)

September 14, 2019

Published Date: 3rd Qtr. 2022	SDDOT	THRIE BEAM GUARDRAIL	PLATE NUMBER 630.01 Sheet 5 of 5

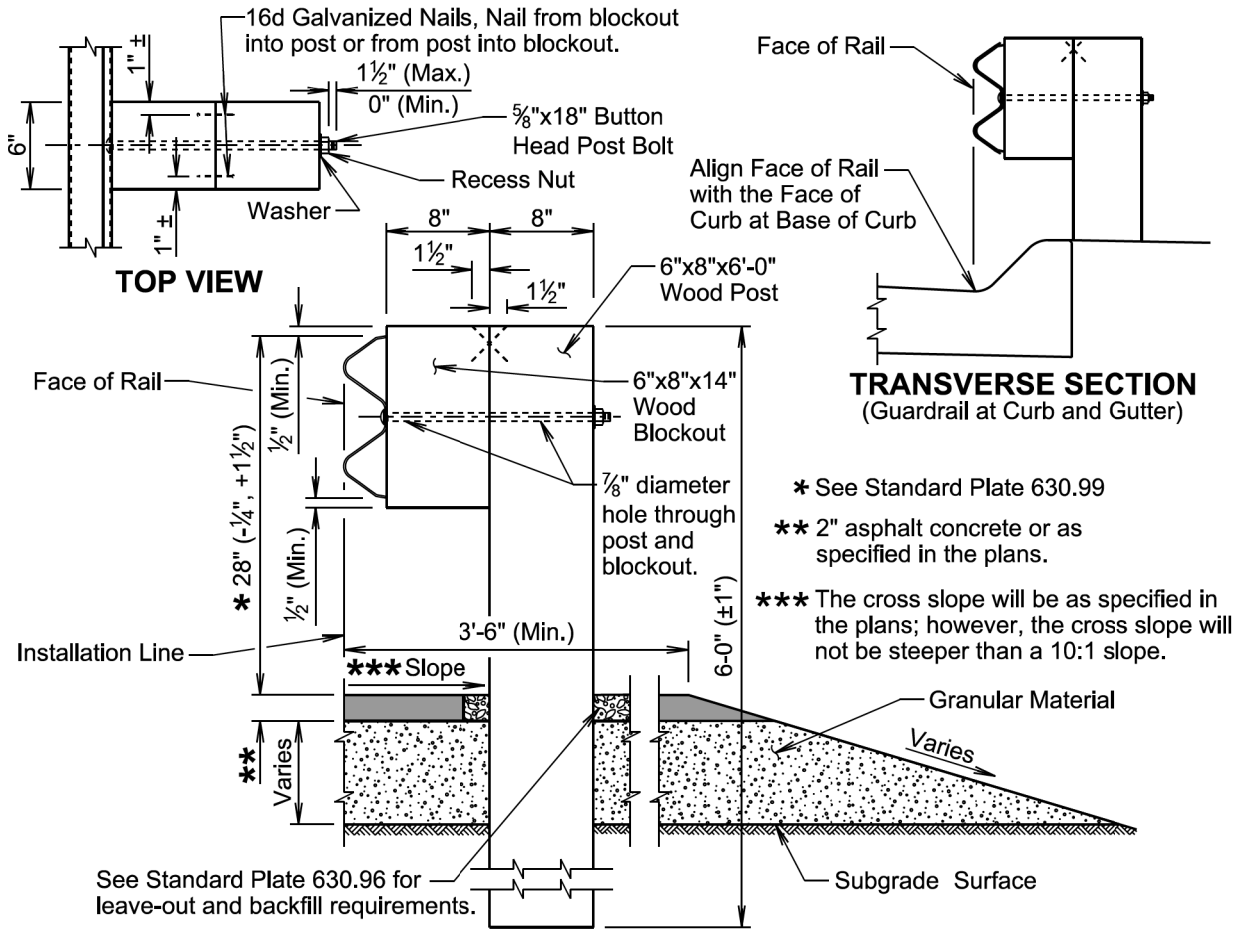

TRANSVERSE SECTION

GENERAL NOTES:

Asphalt concrete will be the same type used elsewhere on the project or will be as specified in the plans. If asphalt concrete is not specified in the plans, the asphalt concrete will conform to the Specifications for "Asphalt Concrete Composite".

Granular material will be the same type used elsewhere on the project or will be as specified in the plans. If granular material type is not specified in the plans, the material will conform to the Specifications for "Base Course". The granular material will be placed the same thickness as the mainline surfacing or as specified in the plans.

Topsoil is not shown in the transverse section drawing.

All W beam rail will be Type 1 and Class A (12 Ga.) unless specified otherwise in the plans.

W beam rail section lengths may be 12'-6" and/or 25'-0". The combination of section lengths used will be compatible with the total length of rail per site as shown in the plans.

Slots in the rails will be provided as specified in the plans and by the manufacturer. A drilled hole through the rail is not allowed as a replacement for a slot. If the Contractor must create a slot, a cutting torch or plasma cutter is not allowed. The slot edges will be smooth and free of burrs or notches.

The top of post and top of block will have a true square cut. The top of block will be a maximum of ± ½ inch from the top of the post.

September 14, 2019

Published Date: 3rd Qtr. 2022	SDDOT	W BEAM GUARDRAIL	PLATE NUMBER 630.10 Sheet 1 of 5

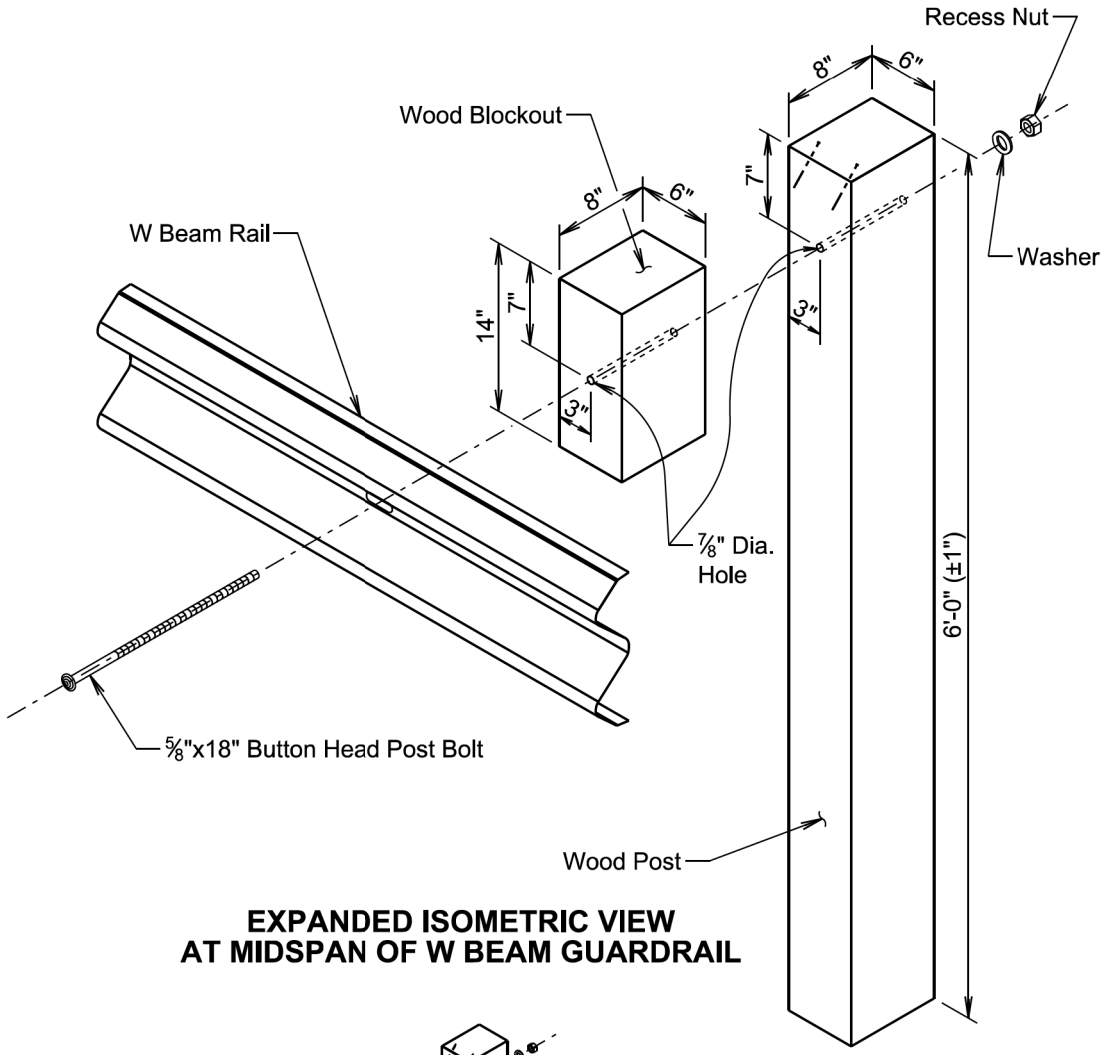

EXPANDED ISOMETRIC VIEW AT MIDSPAN OF W BEAM GUARDRAIL

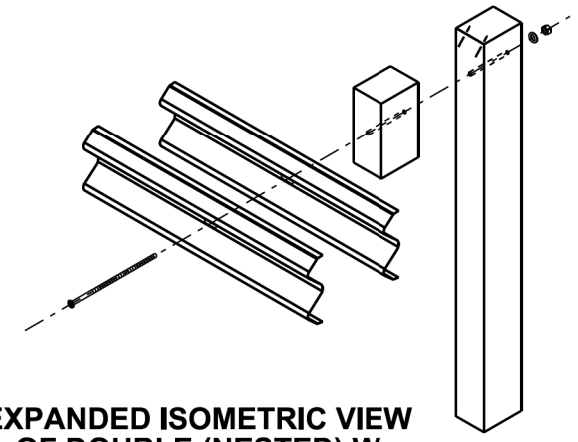

EXPANDED ISOMETRIC VIEW OF DOUBLE (NESTED) W BEAM GUARDRAIL AT MIDSPAN
(For Information Only, Not to Scale)

September 14, 2019

Published Date: 3rd Qtr. 2022	SDDOT	W BEAM GUARDRAIL	PLATE NUMBER 630.10 Sheet 2 of 5

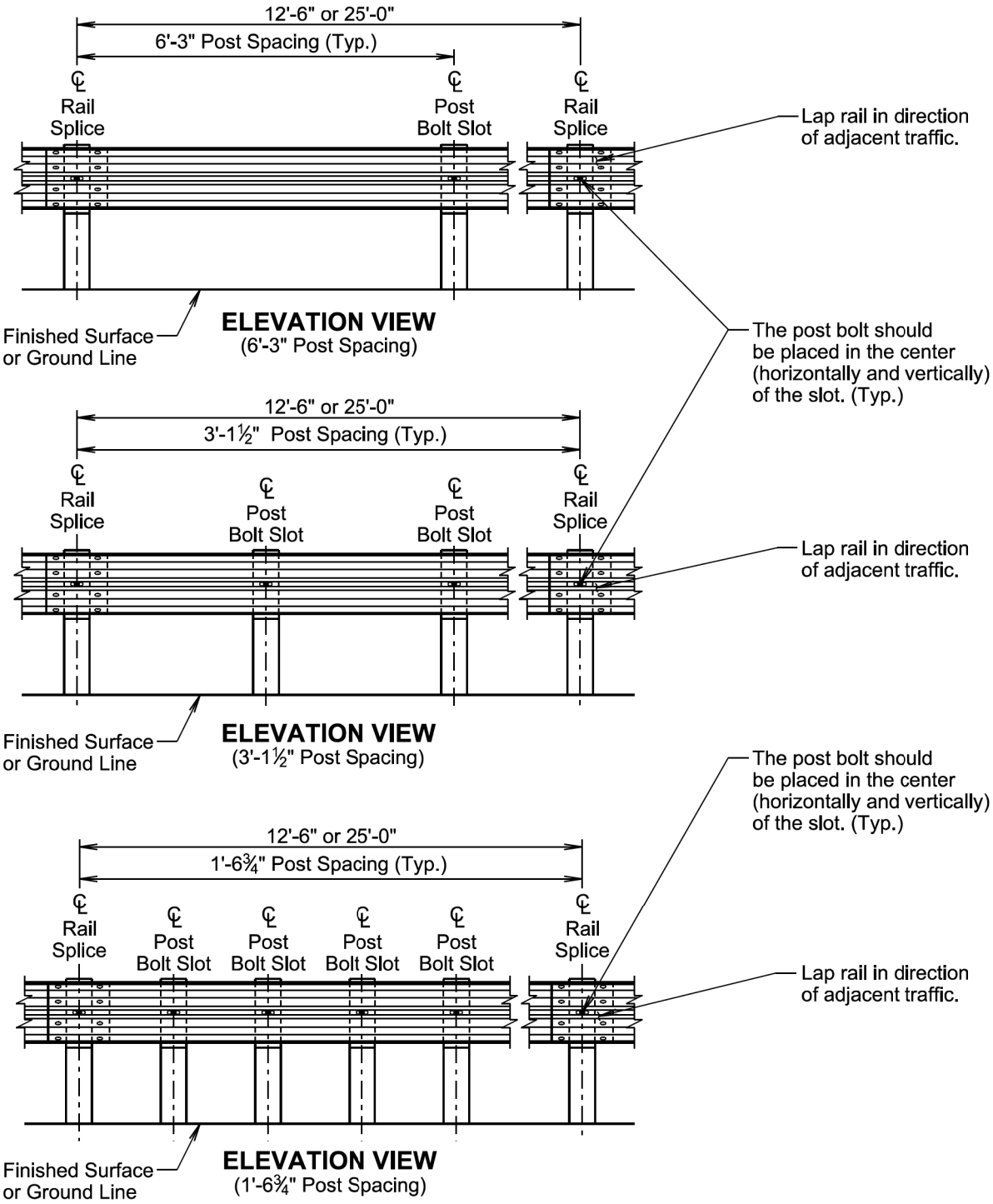

September 14, 2019

Published Date: 3rd Qtr. 2022	SDDOT	W BEAM GUARDRAIL	PLATE NUMBER 630.10 Sheet 3 of 5

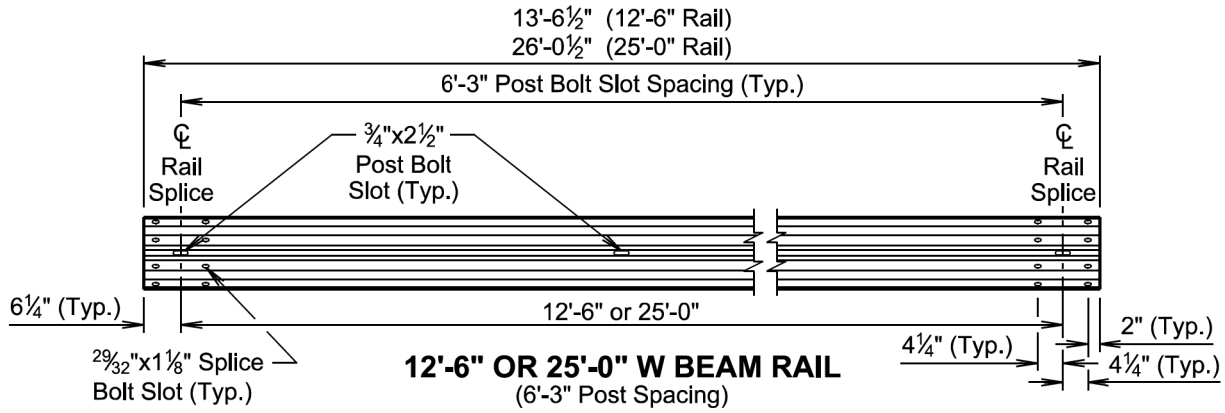

12'-6" OR 25'-0" W BEAM RAIL
(6'-3" Post Spacing)

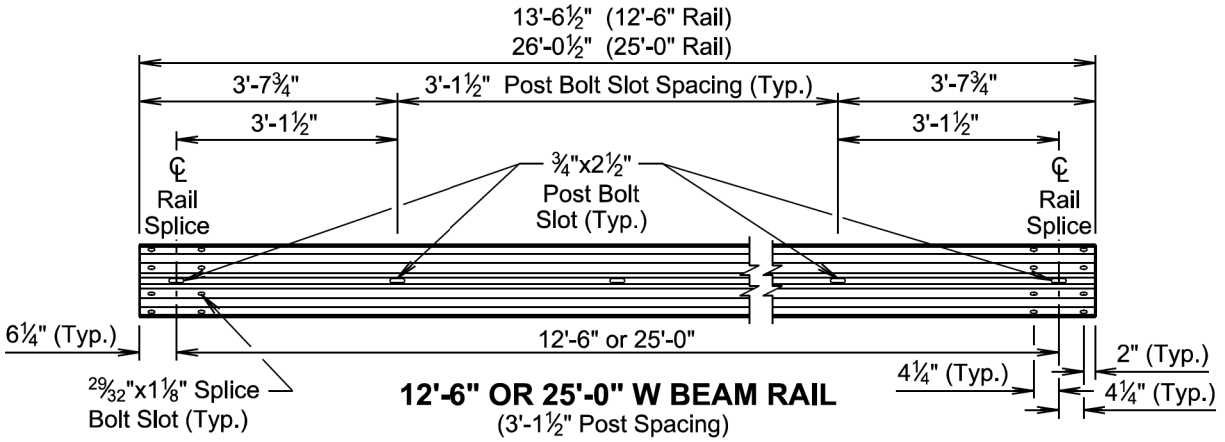

12'-6" OR 25'-0" W BEAM RAIL
(3'-1½" Post Spacing)

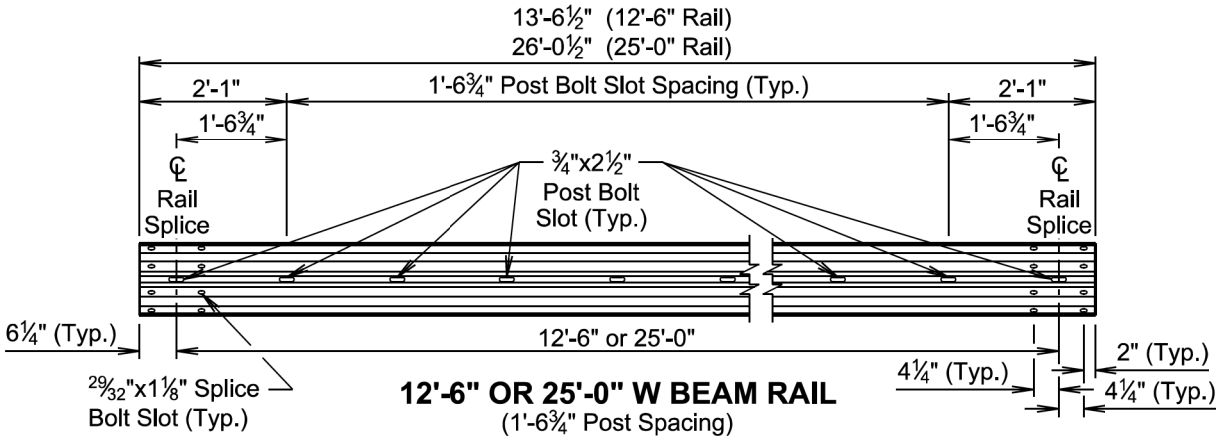

12'-6" OR 25'-0" W BEAM RAIL
(1'-6¾" Post Spacing)

September 14, 2019

Published Date: 3rd Qtr. 2022	SDDOT	W BEAM GUARDRAIL	PLATE NUMBER 630.10 Sheet 4 of 5

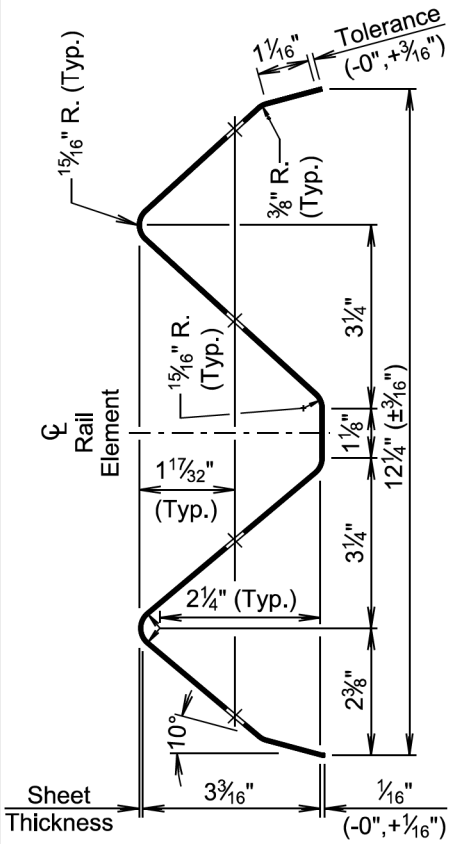

SECTION THROUGH W BEAM RAIL

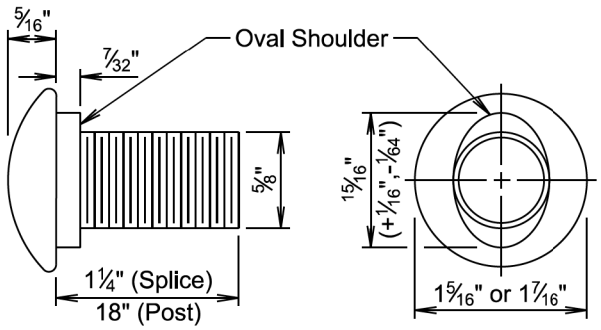

SPLICE BOLT AND POST BOLT
(5/8" Button Head Bolt)

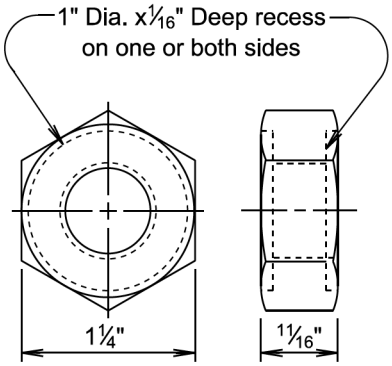

RECESS NUT
(At lap splices, the recess will be placed against the steel rail.)

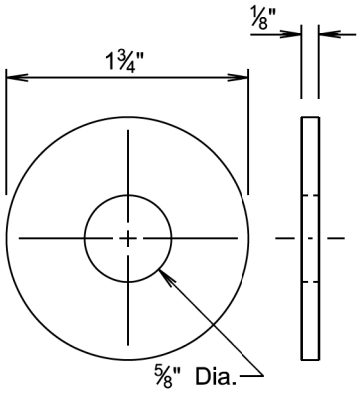

WASHER
(The washer will be placed between the back side of wood post and the recess nut, see sheet 1 and 2.)

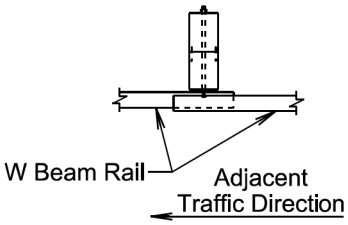

PLAN VIEW
(Lap Splice)
(Lap rail in direction of adjacent traffic.)
(8 splice bolts and 8 recess nuts per splice, NO washers)

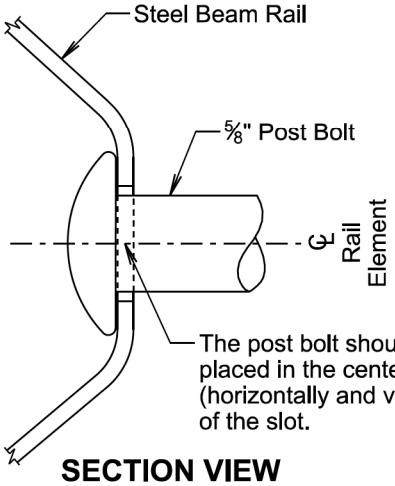

SECTION VIEW
(At Post Bolt)

September 14, 2019

Published Date: 3rd Qtr. 2022	SDDOT	W BEAM GUARDRAIL	PLATE NUMBER 630.10 Sheet 5 of 5

TYPE AND DETAILS OF MGS						
Type of MGS	W Beam Rail Single or Double (Nested)	Blockout Size	Blockout Material	Post Size	Post Material	Post Spacing
1	Single	6"x12"x14"	Wood	6"x8"x6'-0"	Wood	6'-3"
1C	Single	6"x12"x14"	Wood	6"x8"x7'-6"	Wood	6'-3"
2	Single	6"x12"x14"	Wood	6"x8"x6'-0"	Wood	3'-1½"
3	Single	6"x12"x14"	Wood	6"x8"x6'-0"	Wood	1'-6¾"
4	Double	6"x12"x14"	Wood	6"x8"x6'-0"	Wood	6'-3"

STANDARD PLATE REFERENCE	
Type of MGS	See Standard Plate(s)
1	630.20, 630.22
1C	630.20, 630.25
2	630.20
3	630.20
4	630.20

GENERAL NOTES:

Asphalt concrete will be the same type used elsewhere on the project or will be as specified in the plans. If asphalt concrete is not specified in the plans, the asphalt concrete will conform to the Specifications for "Asphalt Concrete Composite".

Granular material will be the same type used elsewhere on the project or will be as specified in the plans. If granular material type is not specified in the plans, the material will conform to the Specifications for "Base Course". The granular material will be placed the same thickness as the mainline surfacing or as specified in the plans.

Topsoil is not shown in the transverse section drawing on sheet 2 of 6.

All W beam rail will be Type 1 and Class A (12 Ga.) unless specified otherwise in the plans.

W beam rail section lengths may be 12'-6" and/or 25'-0". The combination of section lengths used will be compatible with the total length of rail per site as shown in the plans.

Slots in the rails will be provided as specified in the plans and by the manufacturer. A drilled hole through the rail is not allowed as a replacement for a slot. If the Contractor must create a slot, a cutting torch or plasma cutter is not allowed. The slot edges will be smooth and free of burrs or notches.

All costs for constructing the MGS including labor, equipment, and materials including all posts, blockouts, steel beam rail, and hardware will be incidental to the contract unit price per foot for the respective MGS contract item.

September 14, 2019

Published Date: 3rd Qtr. 2022

SDDOT

MIDWEST GUARDRAIL SYSTEM (MGS)

PLATE NUMBER 630.20

Sheet 1 of 6

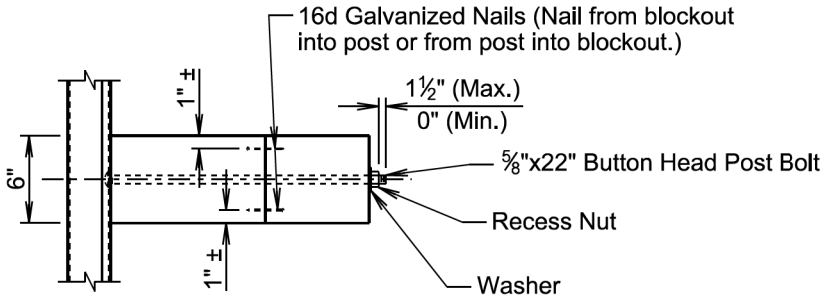

TOP VIEW
(Type 1, 2, or 3 MGS Installation)

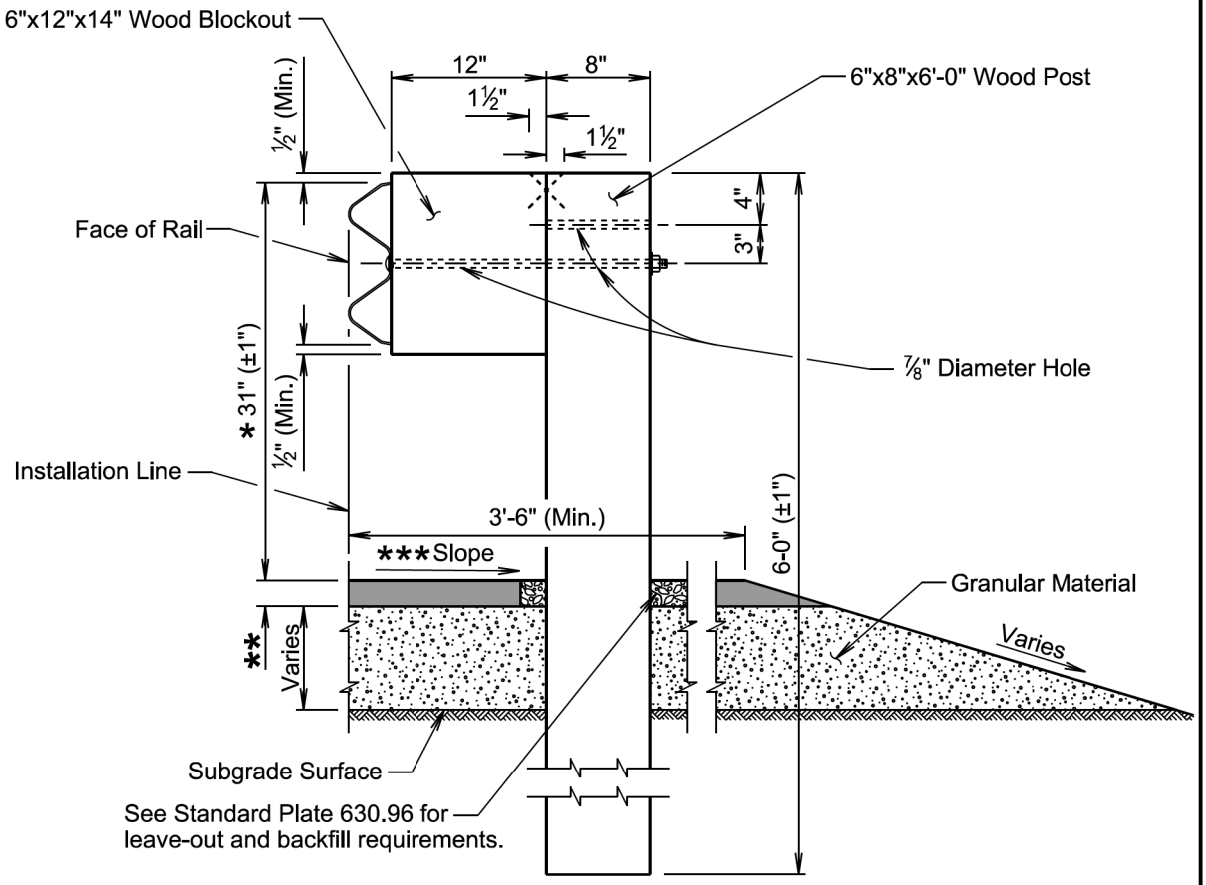

TRANSVERSE SECTION
(Type 1, 2, or 3 MGS Installation)

* See Standard Plate 630.99

** 2" asphalt concrete or as specified in the plans.

*** The cross slope will be as specified in the plans; however, the cross slope will not be steeper than a 10:1 slope.

September 14, 2019

Published Date: 3rd Qtr. 2022	SDDOT	MIDWEST GUARDRAIL SYSTEM (MGS)	PLATE NUMBER 630.20 Sheet 2 of 6

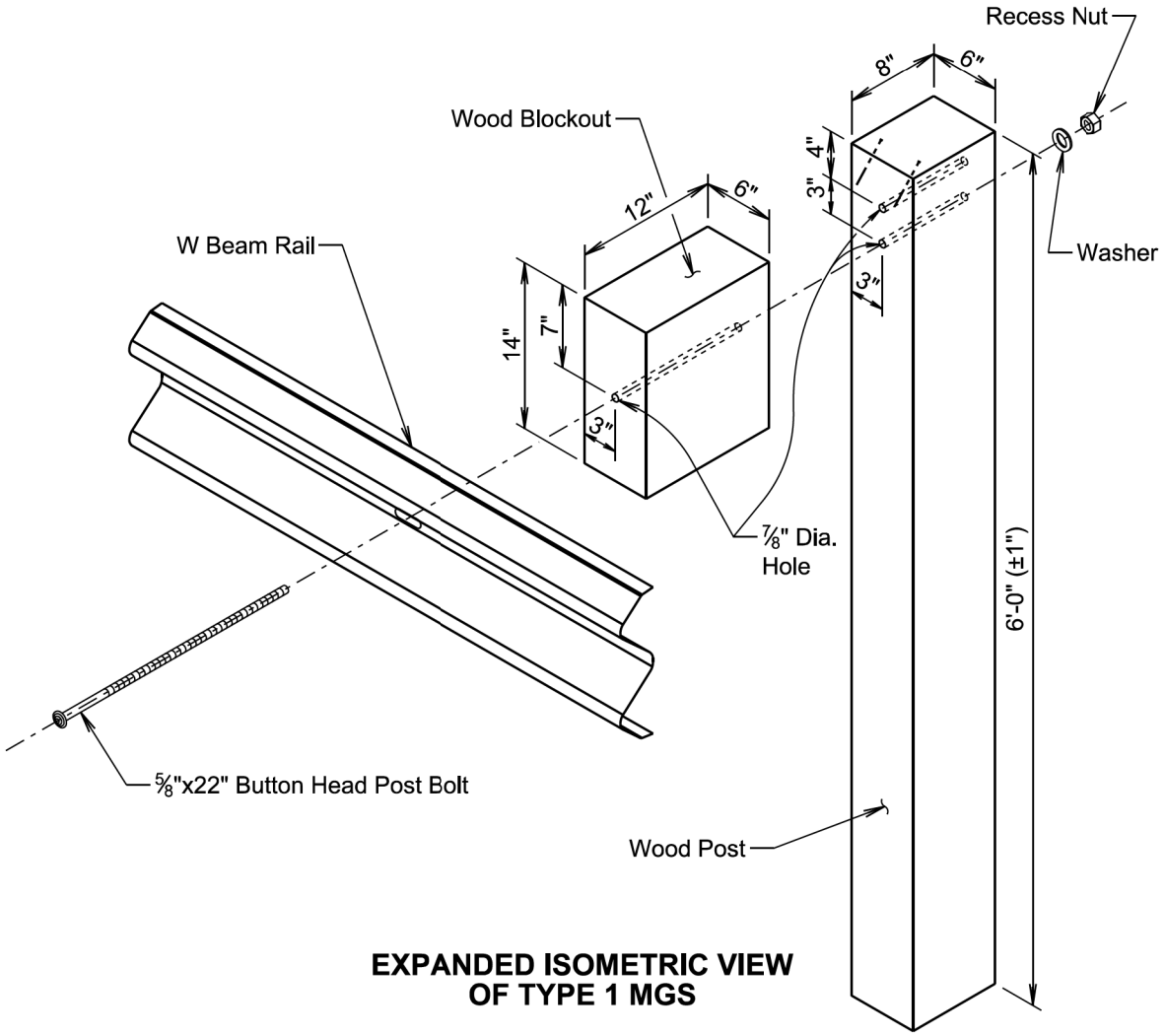

EXPANDED ISOMETRIC VIEW OF TYPE 1 MGS

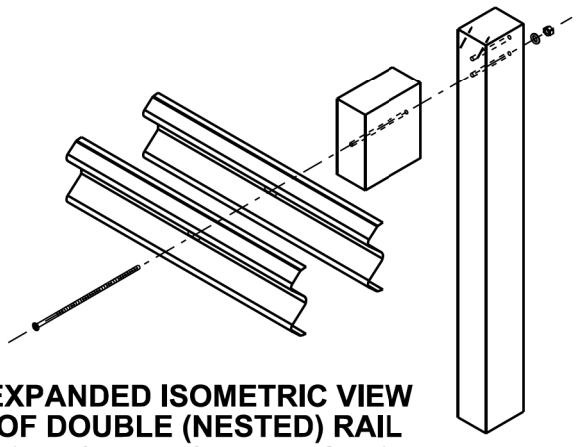

EXPANDED ISOMETRIC VIEW OF DOUBLE (NESTED) RAIL
(For Information Only, Not to Scale)

September 14, 2019

Published Date: 3rd Qtr. 2022	SDDOT	MIDWEST GUARDRAIL SYSTEM (MGS)	PLATE NUMBER 630.20 Sheet 3 of 6

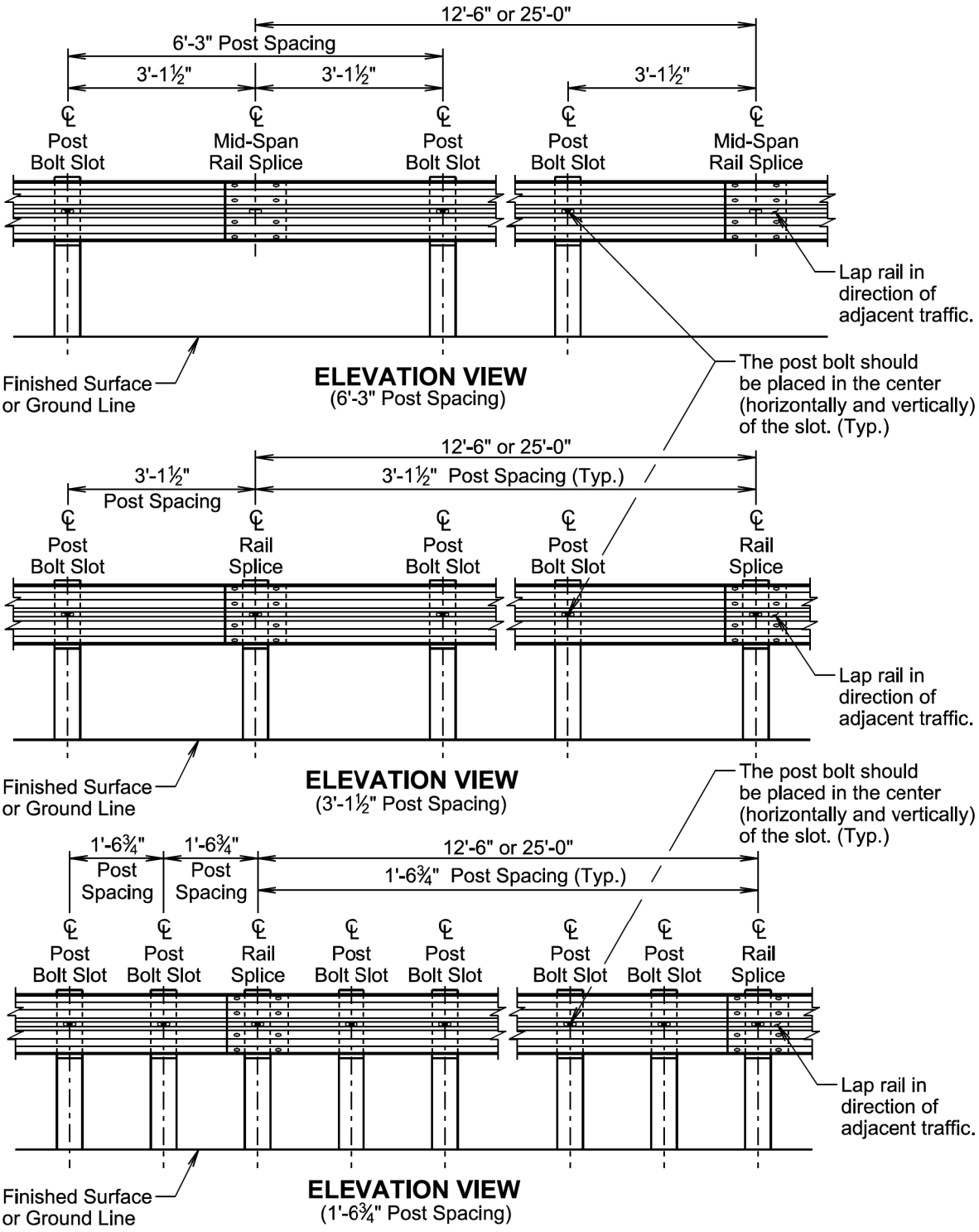

September 14, 2019

Published Date: 3rd Qtr. 2022	SDDOT	MIDWEST GUARDRAIL SYSTEM (MGS)	PLATE NUMBER 630.20 Sheet 4 of 6

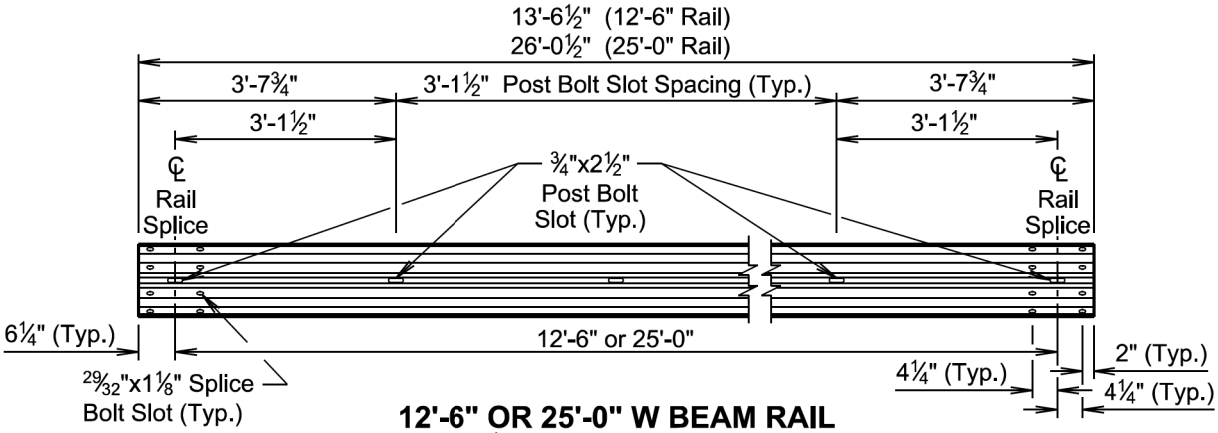

12'-6" OR 25'-0" W BEAM RAIL
(3'-1½" and 6'-3" Post Spacing)

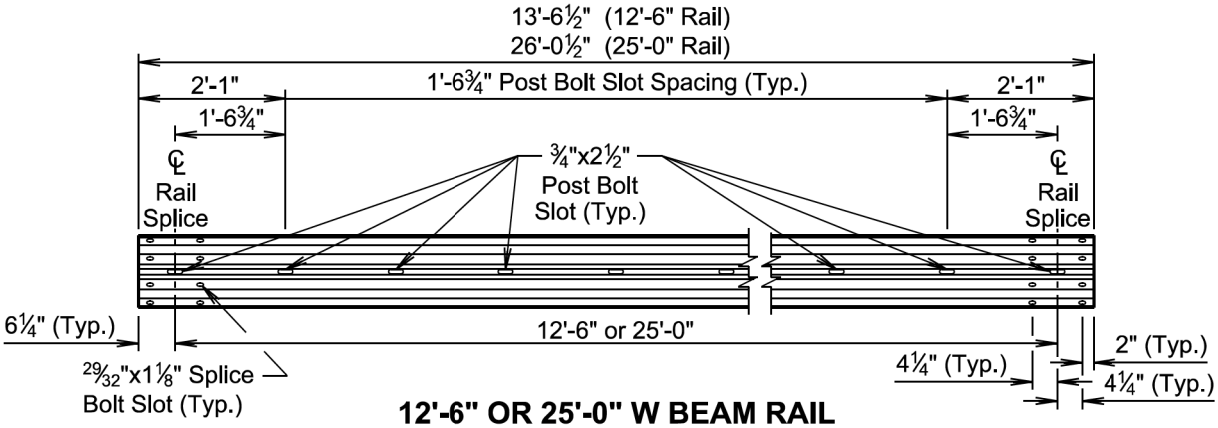

12'-6" OR 25'-0" W BEAM RAIL
(1'-6¾" Post Spacing)

September 14, 2019

Published Date: 3rd Qtr. 2022	SDDOT	MIDWEST GUARDRAIL SYSTEM (MGS)	PLATE NUMBER 630.20 Sheet 5 of 6

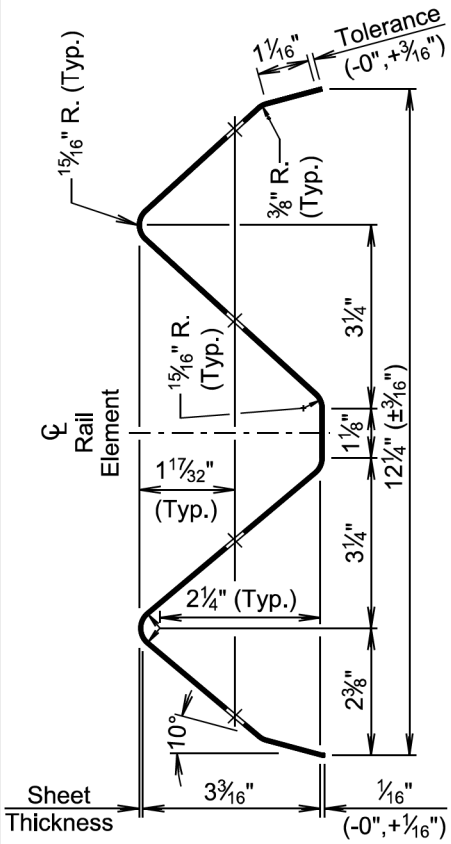

SECTION THROUGH W BEAM RAIL

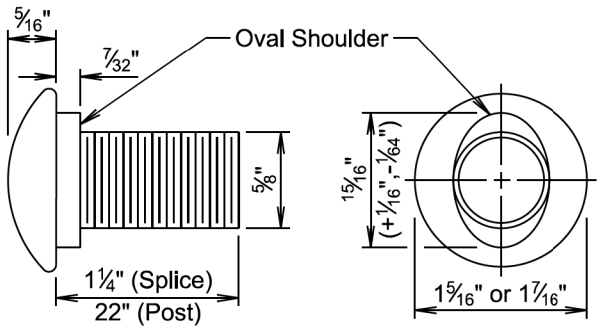

SPLICE BOLT AND POST BOLT
(5/8" Button Head Bolt)

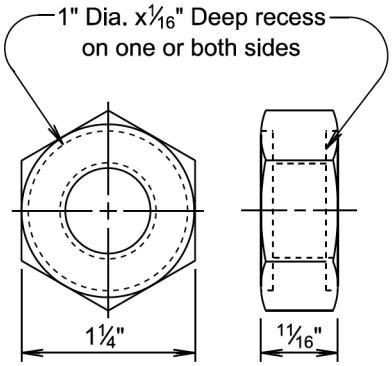

RECESS NUT
(At lap splices, the recess will be placed against the steel rail.)

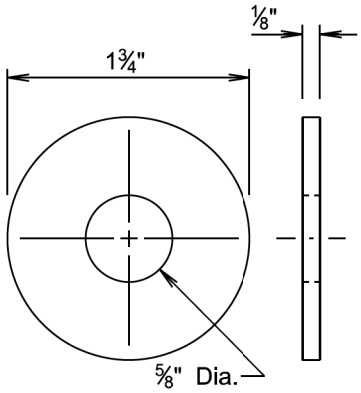

WASHER
(The washer will be placed between the back side of wood post and the recess nut, see sheet 2 and 3.)

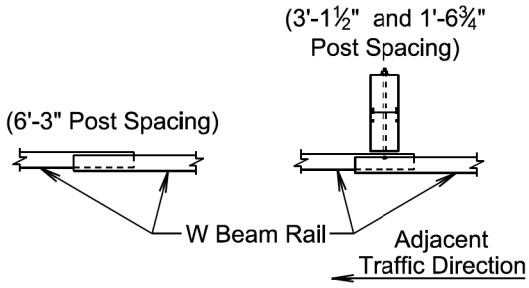

PLAN VIEW
(Lap Splice)
(Lap rail in direction of adjacent traffic.)
(8 splice bolts and 8 recess nuts per splice, NO washers)

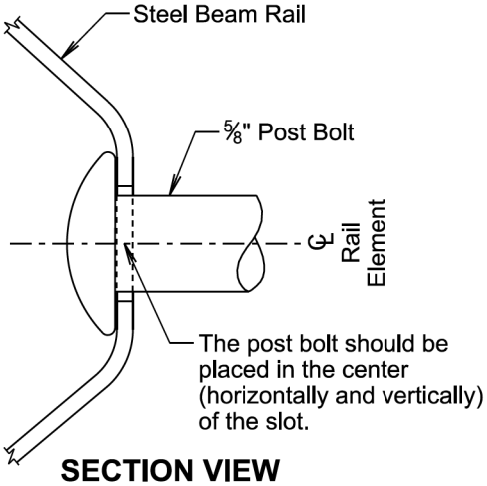

SECTION VIEW
(At Post Bolt)

September 14, 2019

Published Date: 3rd Qtr. 2022	SDDOT	MIDWEST GUARDRAIL SYSTEM (MGS)	PLATE NUMBER 630.20 Sheet 6 of 6

CONCRETE CURB AND GUTTER TYPE	DIMENSION *** (in.)
B and BL	8
D	12
F and FL	10
R	11

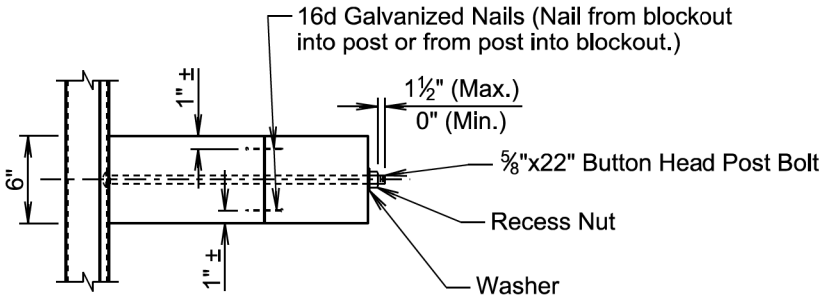

TOP VIEW

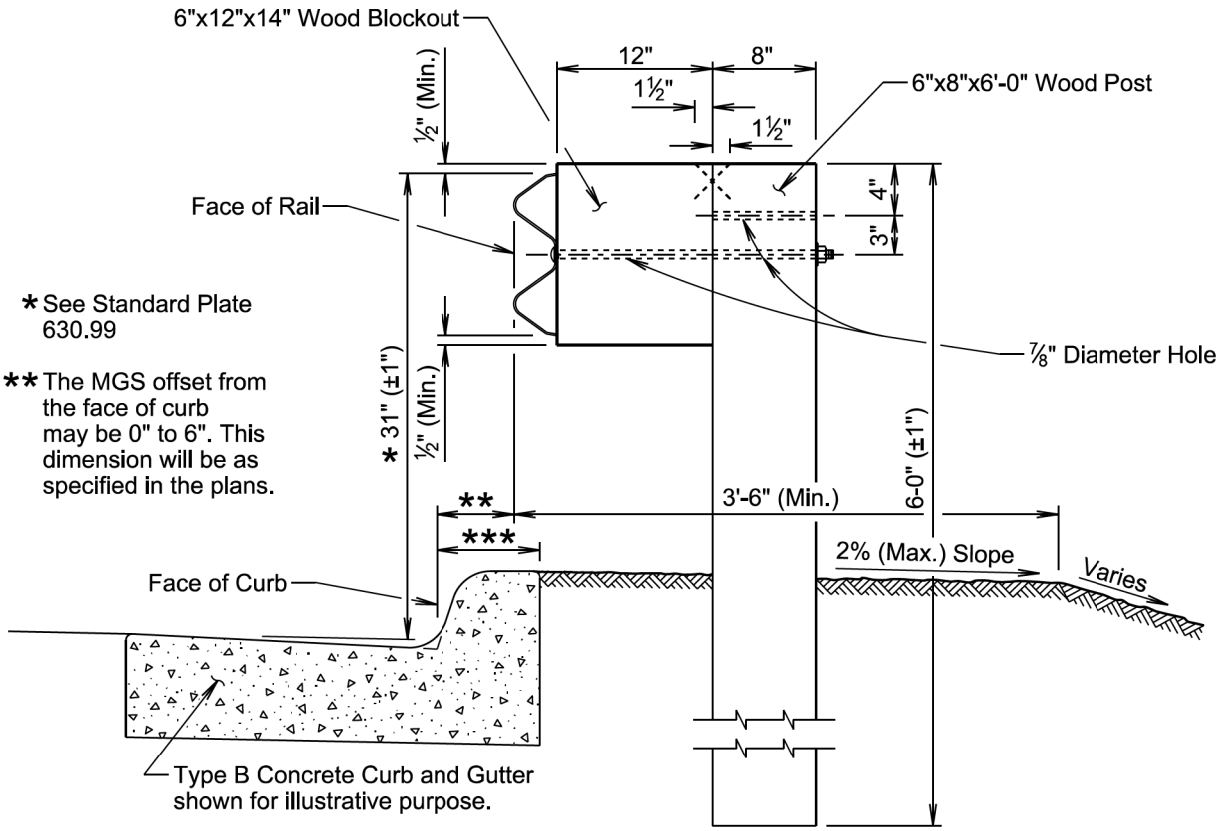

TRANSVERSE SECTION

GENERAL NOTES:

The guardrail on this standard plate is Type 1 MGS. See standard plate 630.20 for specifications regarding Type 1 MGS.

When PCC pavement or asphalt concrete pavement is adjacent to the post, see standard plate 630.96 for leave-out and backfill requirements.

September 14, 2019

Published Date: 3rd Qtr. 2022	SDDOT	MIDWEST GUARDRAIL SYSTEM (MGS) AT CURB AND GUTTER	PLATE NUMBER 630.22 Sheet 1 of 1

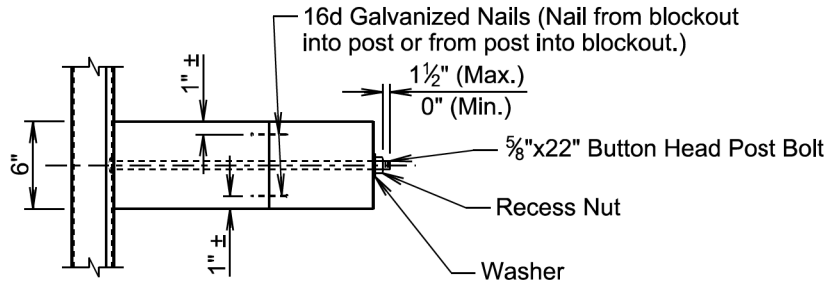

TOP VIEW
(Type 1C MGS Installation)

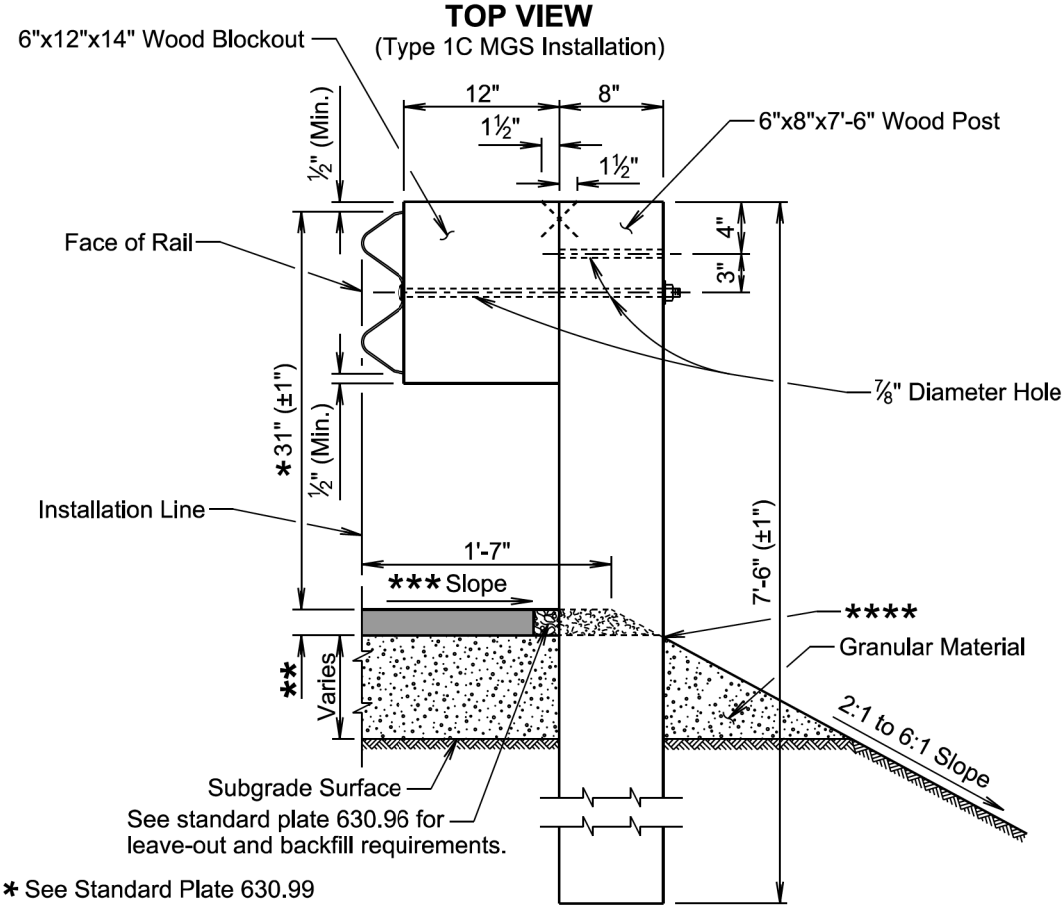

* See Standard Plate 630.99

** 2" asphalt concrete or as specified in the plans.

TRANSVERSE SECTION
(Type 1C MGS Installation)

*** The cross slope will be as specified in the plans; however, the cross slope will not be steeper than a 10:1 slope.

**** For guardrail post installation purposes, the asphalt concrete sluff will end at this location. It will not be allowed to extend down the slope of the granular material.

GENERAL NOTES:

The guardrail on this standard plate is Type 1C MGS. See standard plate 630.20 for specifications regarding Type 1C MGS.

Topsoil is not shown in the transverse section drawing.

November 19, 2021

Published Date: 3rd Qtr. 2022	SDDOT	TYPE 1C MIDWEST GUARDRAIL SYSTEM (MGS) INSTALLATION AT BREAK POINT OF SLOPE	PLATE NUMBER 630.25 Sheet 1 of 1

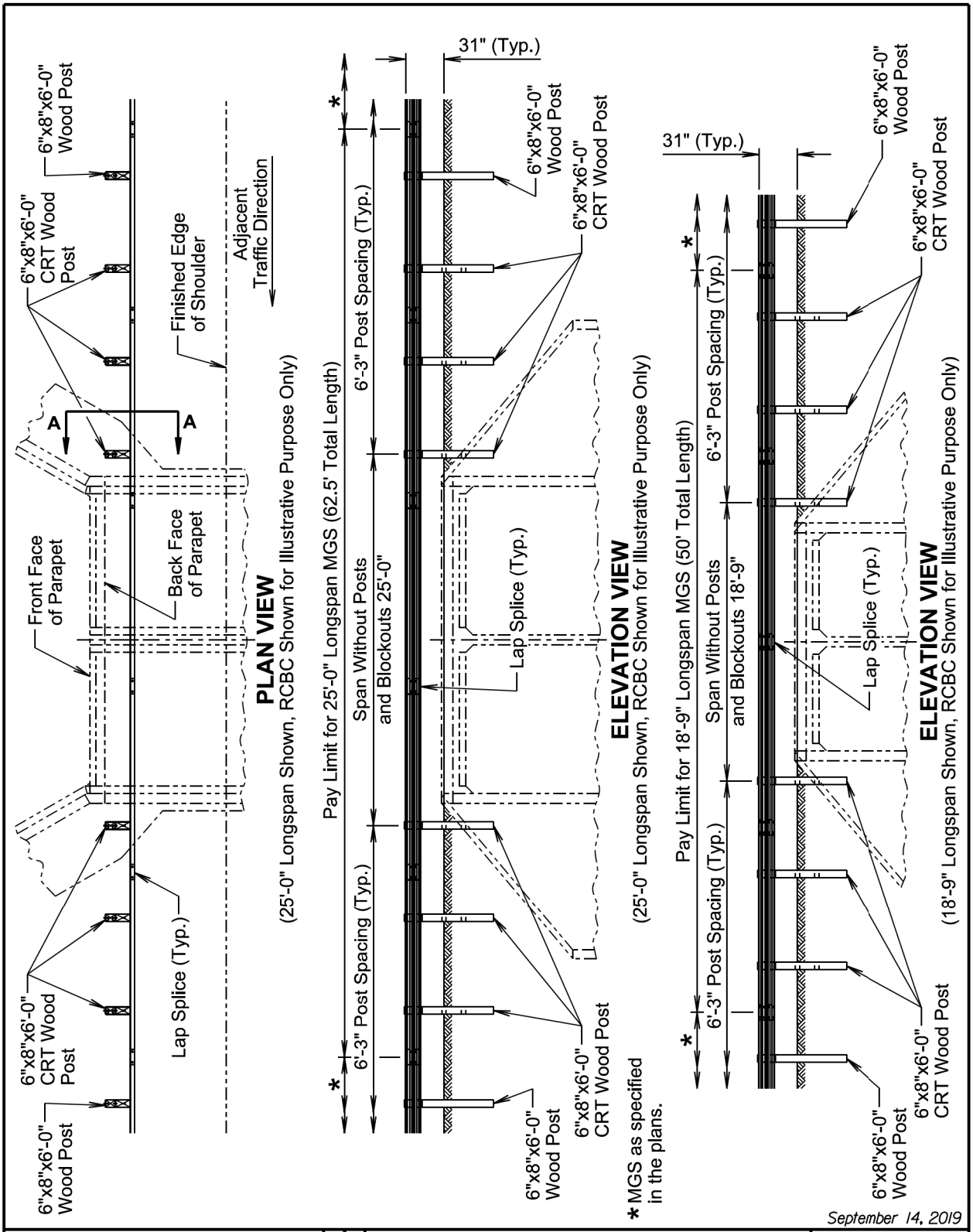

Published Date: 3rd Qtr. 2022	SDDOT	LONGSPAN MIDWEST GUARDRAIL SYSTEM (MGS)	PLATE NUMBER 630.27 Sheet 1 of 3

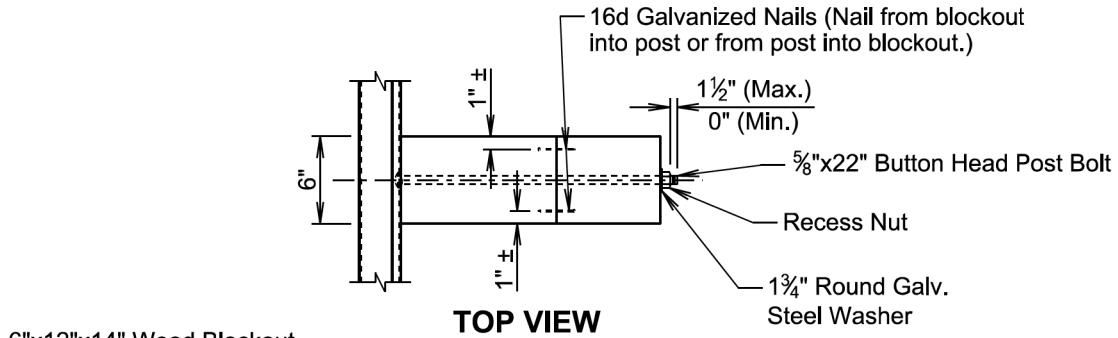

TOP VIEW

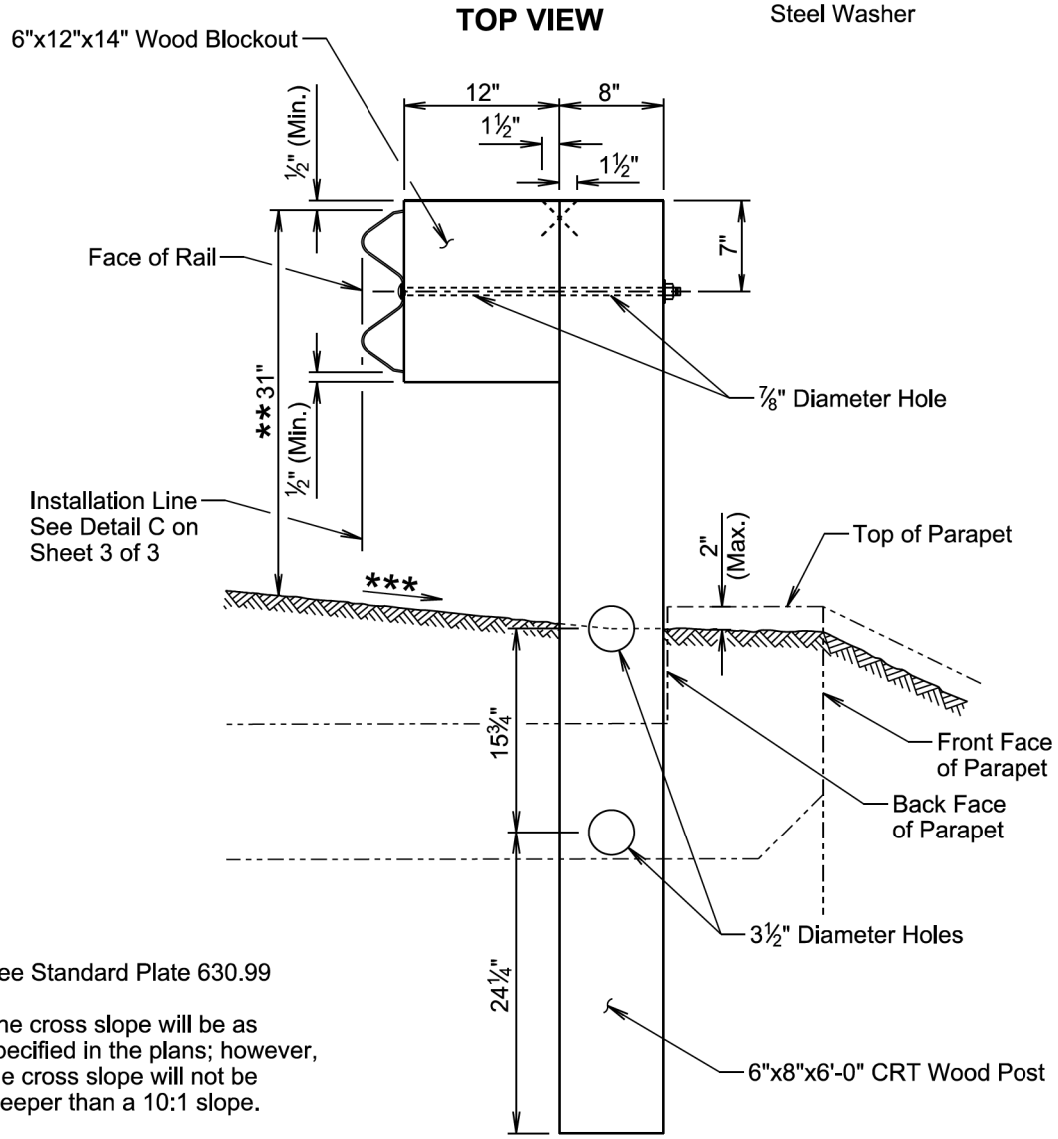

** See Standard Plate 630.99

*** The cross slope will be as specified in the plans; however, the cross slope will not be steeper than a 10:1 slope.

VIEW A-A
(Longspan alignment is shown with the back of post aligned with the back face of parapet.)

September 14, 2019

Published Date: 3rd Qtr. 2022	SDDOT	LONGSPAN MIDWEST GUARDRAIL SYSTEM (MGS)	PLATE NUMBER 630.27 Sheet 2 of 3

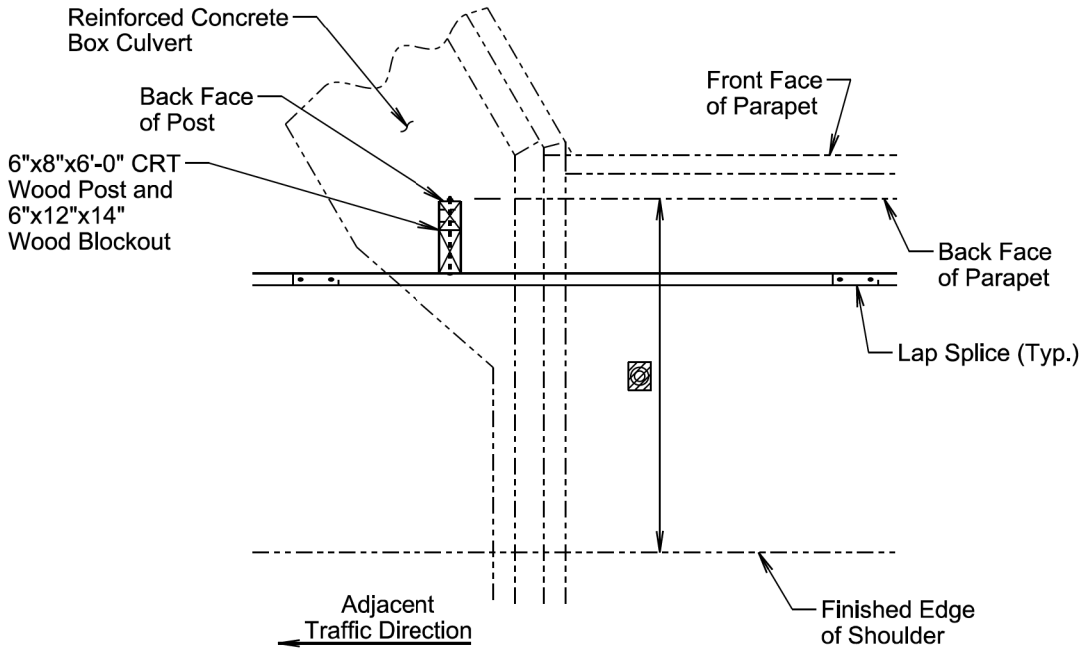

DETAIL C

(Longspan alignment is shown with the back of post aligned with the back face of parapet)

The MGS Longspan alignment will be as specified in the plans; however, the allowable limits of lateral alignment will be such that the back of post will not encroach beyond the back face of the parapet and the front face of the guardrail will not encroach onto the finished shoulder. For other types of culverts that do not have a parapet, the back of post lateral alignment will be a minimum of 1 foot from the opening.

GENERAL NOTES:

See standard plate 630.20 for hardware details and specifications.

The span without posts will be 25' or 18'-9" only, as shown on sheet 1 of 3.

All W beam rail will be Type 1 and Class A (12 Ga.) unless specified otherwise in the plans.

W beam rail section lengths may be 12'-6" and/or 25'-0". The combination of section lengths used will be compatible with the total length of rail per site as shown in the plans.

When PCC pavement or asphalt concrete pavement is adjacent to the post, see standard plate 630.96 for leave-out and backfill requirements.

Slots in the rails will be provided as specified in the plans and by the manufacturer. A drilled hole through the rail is not allowed as a replacement for a slot. If the Contractor must create a slot, a cutting torch or plasma cutter is not allowed. The slot edges will be smooth and free of burrs or notches.

All costs for constructing the Longspan MGS including labor, equipment, and materials including all posts, blockouts, steel beam rail, and hardware will be incidental to the contract unit price per each for the corresponding Longspan MGS contract item.

September 14, 2019

Published Date: 3rd Qtr. 2022	SDDOT	LONGSPAN MIDWEST GUARDRAIL SYSTEM (MGS)	PLATE NUMBER 630.27 Sheet 3 of 3

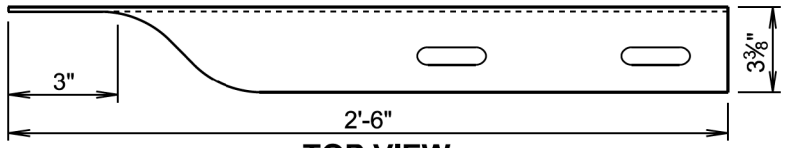

TOP VIEW
(Thrie Beam Terminal Connector)

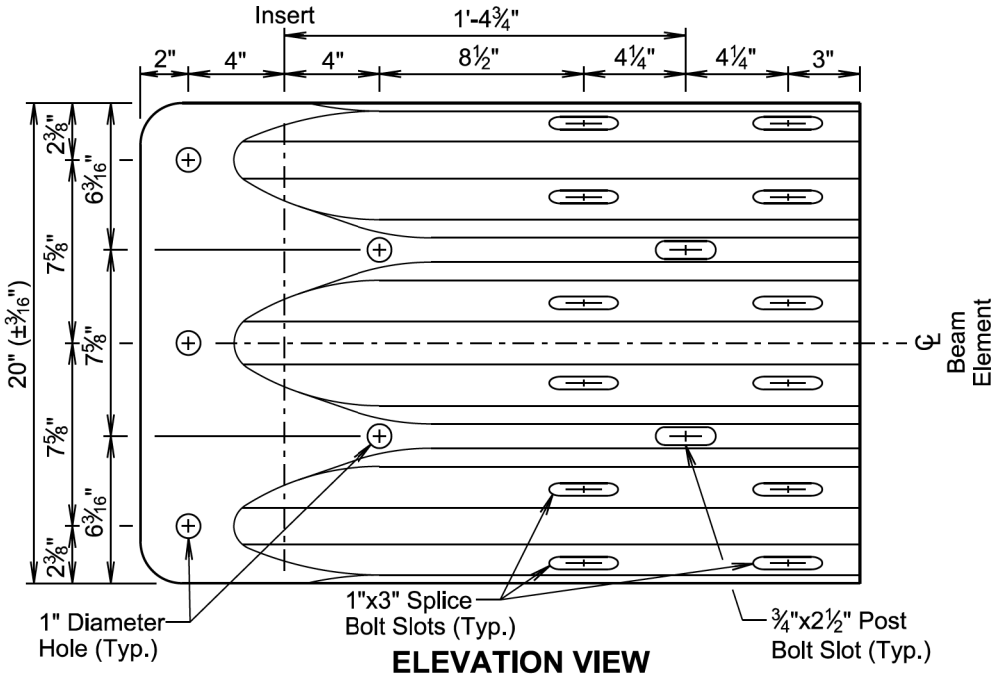

ELEVATION VIEW
(Thrie Beam Terminal Connector)

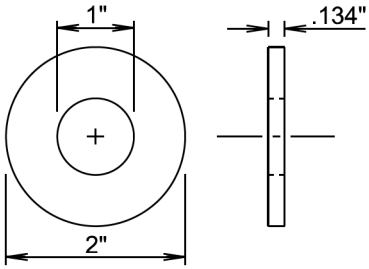

1" STEEL WASHER
(12 washers required)

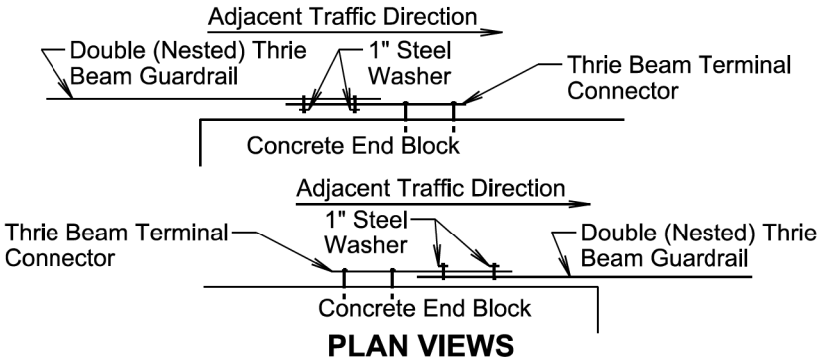

PLAN VIEWS
(Typical Locations of 1" Steel Washers)
(Washers are required at these lap splices)

GENERAL NOTES:

Thrie Beam Terminal Connectors will be 10 gauge.

When the thrie beam terminal connector is used to connect the rail to the bridge or concrete end block, 1" steel washers will be used at the lap splice and the washers will be in direct contact with the 3" slots of the thrie beam terminal connector. See the drawings above for the typical locations of the 1" steel washers.

There will be no separate payment for furnishing and installing the thrie beam terminal connector. All costs for furnishing and installing the thrie beam terminal connector will be incidental to the contract unit price of the respective guardrail item it is attached to.

September 14, 2019

Published Date: 3rd Qtr. 2022	SDDOT	*THRIE BEAM TERMINAL CONNECTOR*	*PLATE NUMBER* 630.47
			Sheet 1 of 1

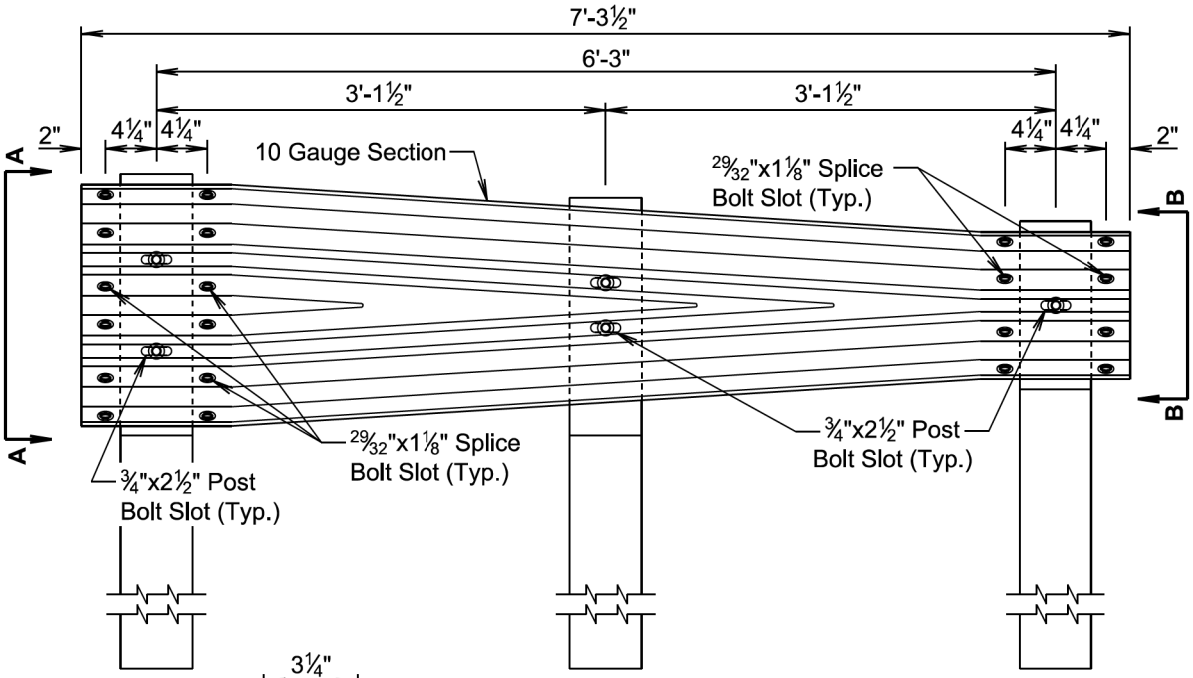

ELEVATION VIEW

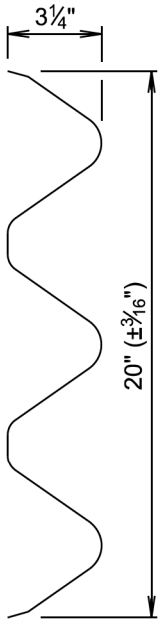

VIEW A-A

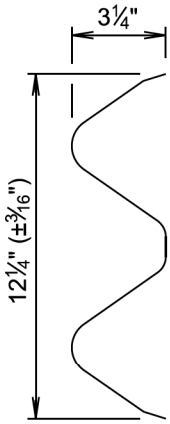

VIEW B-B

GENERAL NOTES:

All costs for furnishing and installing the W beam to thrie beam guardrail transition including labor, equipment, and materials including two posts, two blocks, W beam to thrie beam transition section, and hardware will be incidental to the contract unit price per each for "W Beam to Thrie Beam Guardrail Transition".

September 14, 2019

Published Date: 3rd Qtr. 2022	SDDOT	W BEAM TO THRIE BEAM GUARDRAIL TRANSITION SECTION	PLATE NUMBER 630.48 Sheet 1 of 1

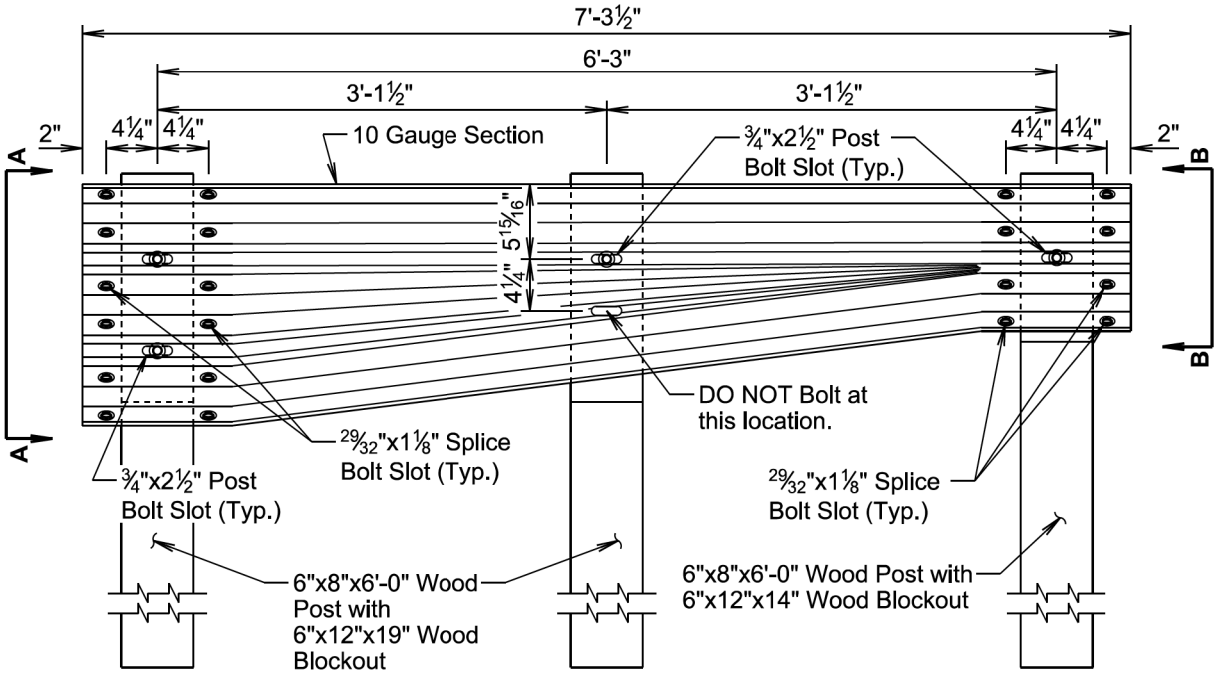

ELEVATION VIEW

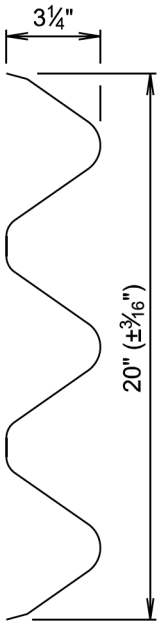

VIEW A-A

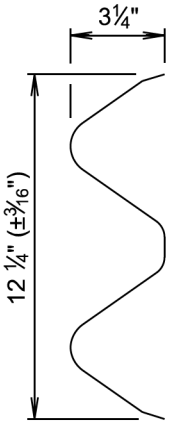

VIEW B-B

GENERAL NOTES:

All costs for furnishing and installing the asymmetrical W beam to thrie beam guardrail transition including labor, equipment, and materials including two posts, two blocks, asymmetrical W beam to thrie beam transition section, and hardware will be incidental to the contract unit price per each for the corresponding guardrail transition contract item.

September 14, 2019

Published Date: 3rd Qtr. 2022	SDDOT	ASYMMETRICAL W BEAM TO THRIE BEAM GUARDRAIL TRANSITION SECTION	PLATE NUMBER 630.49 Sheet 1 of 1

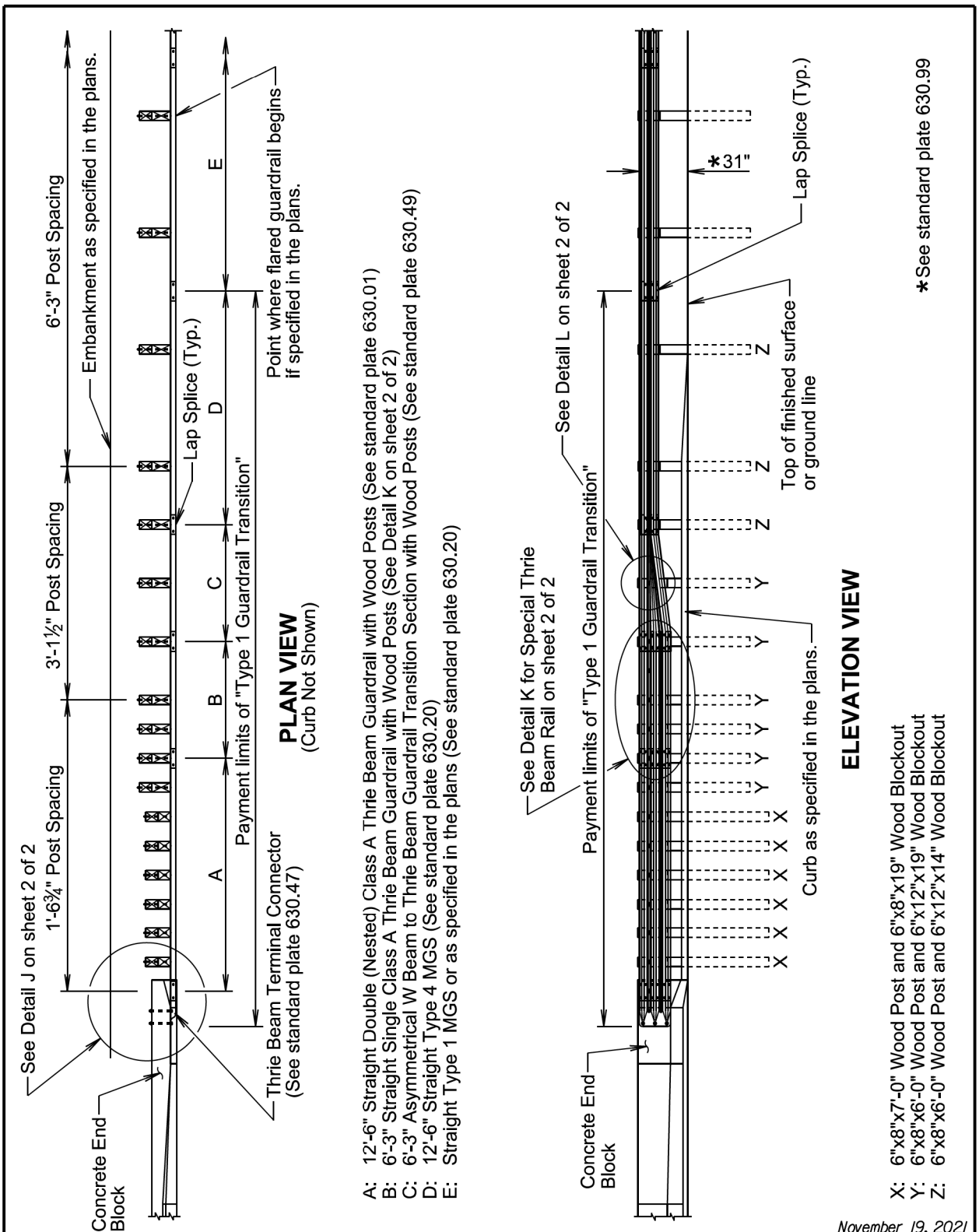

Published Date: 3rd Qtr. 2022	SDDOT	TYPE 1 GUARDRAIL TRANSITION (CONCRETE END BLOCK TO MIDWEST GUARDRAIL SYSTEM (MGS))	PLATE NUMBER 630.50 Sheet 1 of 2

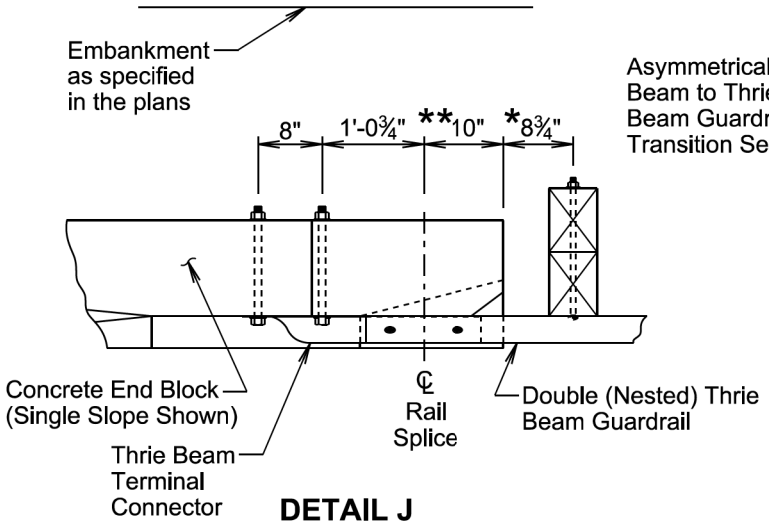

DETAIL J

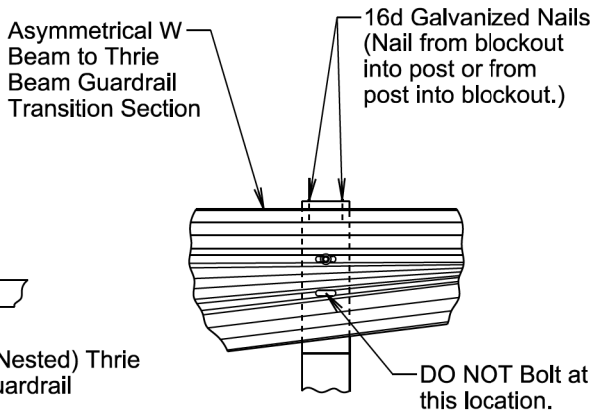

DETAIL L

Jersey Barrier Dimensions are **7¼" and *11½"

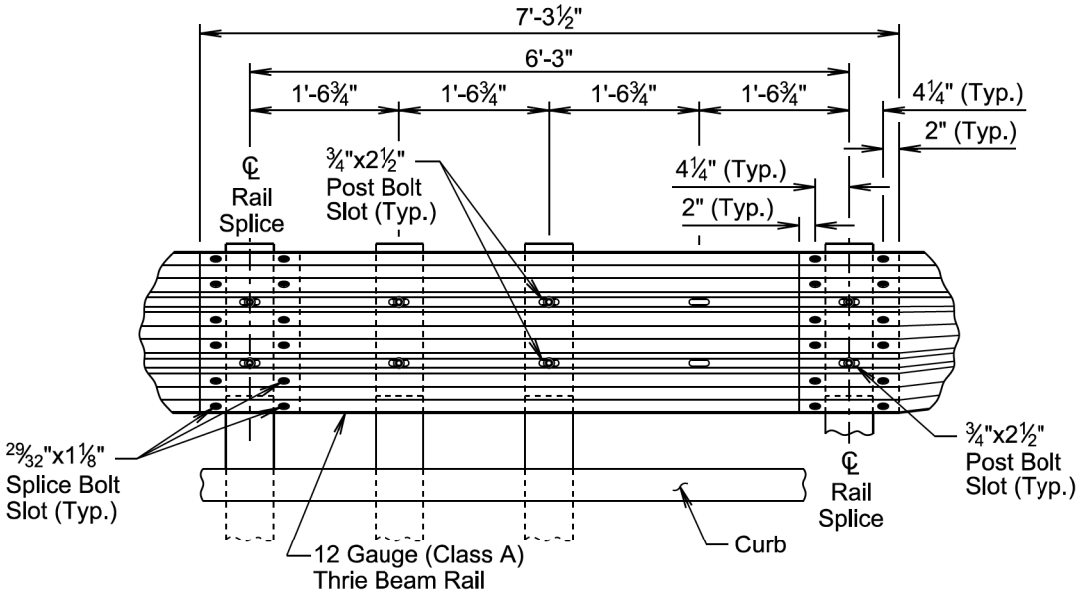

DETAIL K
(Special Thrie Beam Rail)

GENERAL NOTES:

Throughout the type 1 guardrail transition, slots in the rails will be provided as specified in the plans and by the manufacturer. A drilled hole through the rail is not allowed as a replacement for a slot. If the Contractor must create a slot, a cutting torch or plasma cutter is not allowed. The slot edges will be smooth and free of burrs or notches.

All costs for furnishing and installing the type 1 guardrail transition including labor, equipment, and materials which includes all rail sections, posts and blockouts, hardware, and incidentals will be included in the contract unit price per each for "Type 1 Guardrail Transition".

November 19, 2021

Published Date: 3rd Qtr. 2022	SDDOT	TYPE 1 GUARDRAIL TRANSITION (CONCRETE END BLOCK TO MIDWEST GUARDRAIL SYSTEM (MGS))	PLATE NUMBER 630.50 Sheet 2 of 2

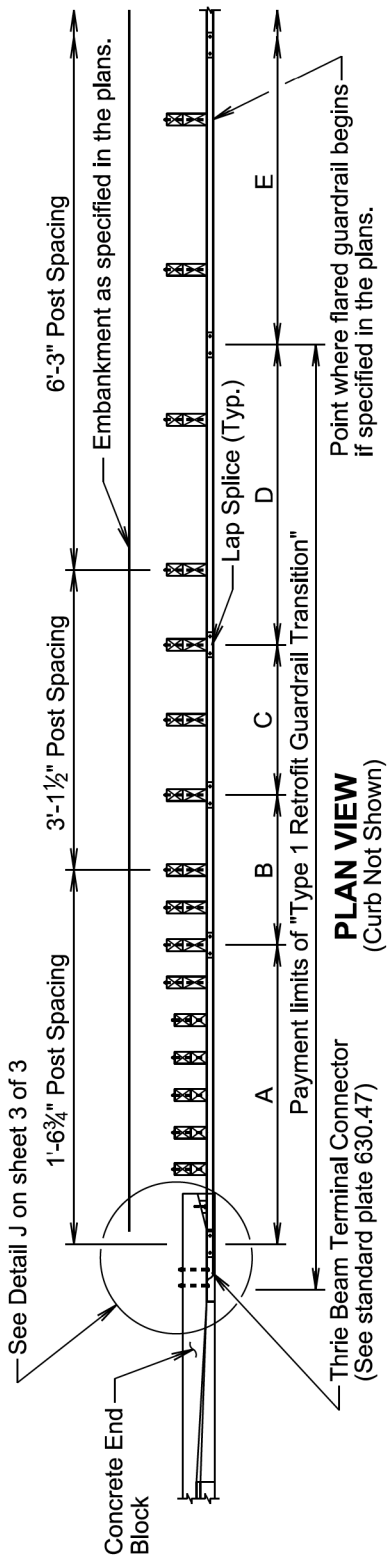

PLAN VIEW
(Curb Not Shown)

A: 12'-6" Straight Double (Nested) Class A Thrie Beam Guardrail with Wood Posts (See standard plate 630.01)
B: 6'-3" Straight Single Class A Thrie Beam Guardrail with Wood Posts (See Detail K on sheet 3 of 3)
C: 6'-3" Asymmetrical W Beam to Thrie Beam Guardrail Transition Section with Wood Posts (See standard plate 630.49)
D: 12'-6" Straight Type 4 MGS (See standard plate 630.20)
E: Straight Type 1 MGS or as specified in the plans (See standard plate 630.20)

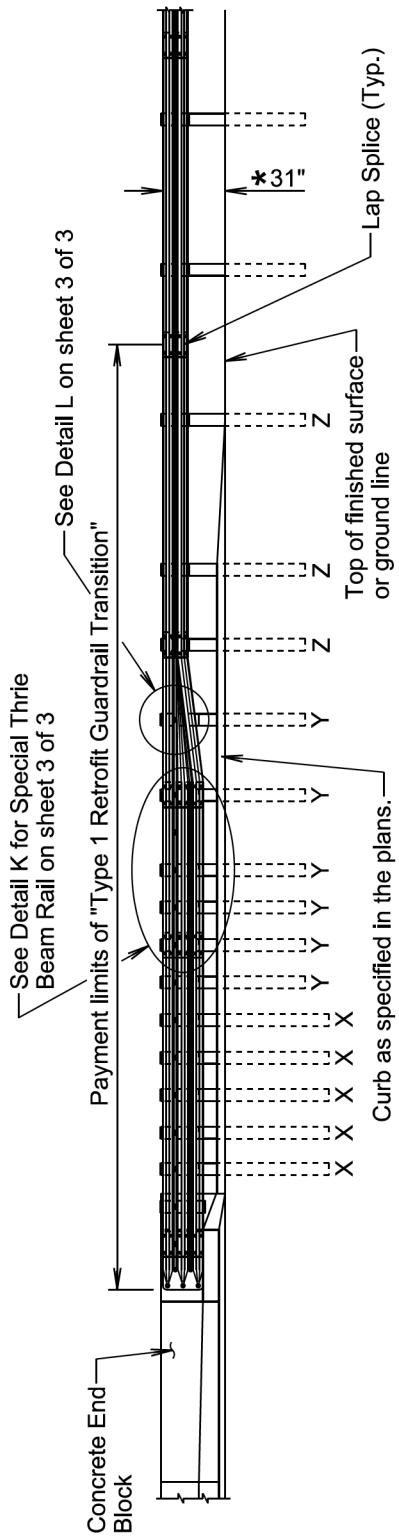

ELEVATION VIEW

*See standard plate 630.99

X: 6"x8"x7'-0" Wood Post and 6"x8"x19" Wood Blockout
Y: 6"x8"x6'-0" Wood Post and 6"x12"x19" Wood Blockout
Z: 6"x8"x6'-0" Wood Post and 6"x12"x14" Wood Blockout

September 14, 2019

Published Date: 3rd Qtr. 2022	SDDOT	TYPE 1 RETROFIT GUARDRAIL TRANSITION (CONCRETE END BLOCK TO MIDWEST GUARDRAIL SYSTEM (MGS))	PLATE NUMBER 630.51 Sheet 1 of 3

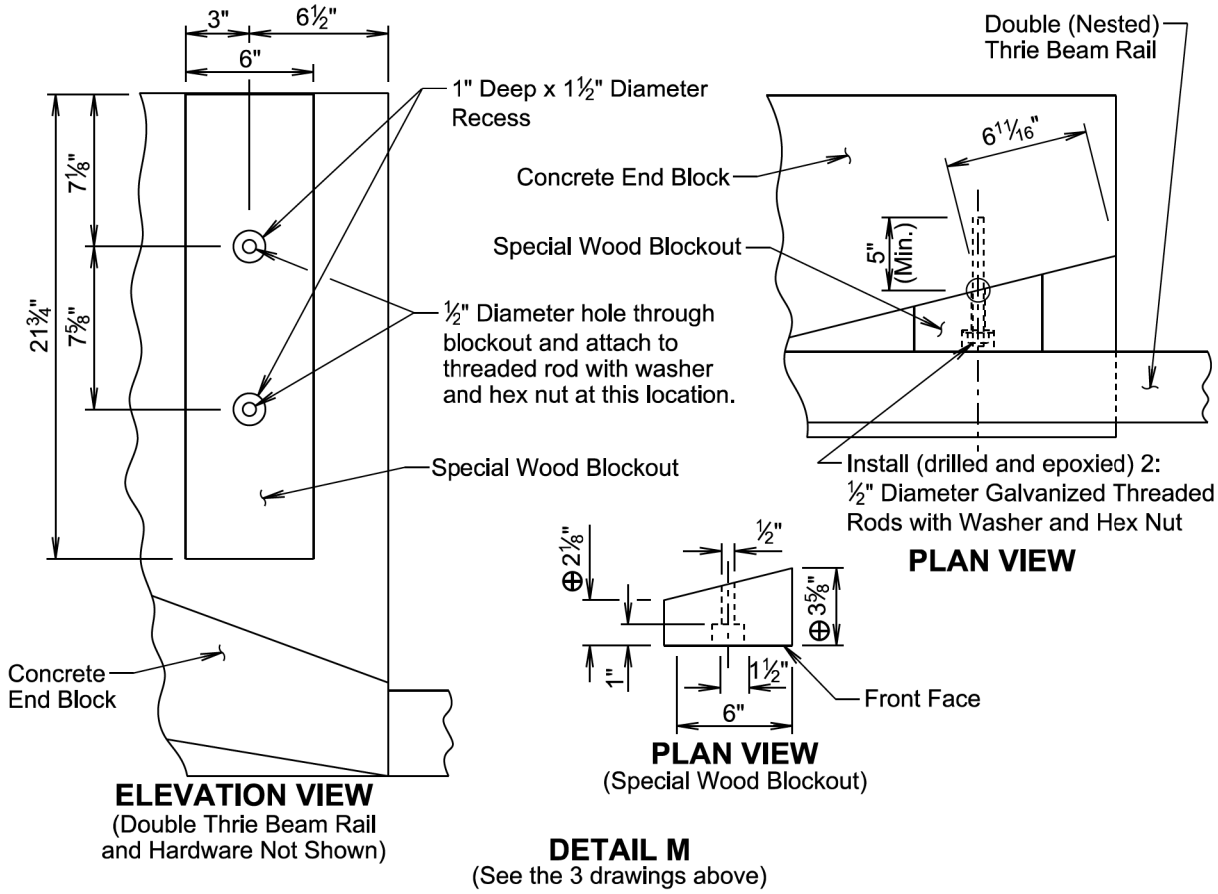

GENERAL NOTES FOR INSTALLING THREADED RODS INTO CONCRETE:

⊕ The dimensions shown are estimated based on original construction plans of the concrete end block. The special wood blockout will be cut as necessary such that the front face of the special wood blockout will align with the vertical front face of the concrete end block ±½".

The threaded rods will be ½" diameter and conform to ASTM F1554, Grade 55. The threaded rods will be embedded a minimum of 5" into the concrete.

The diameter of the drilled holes will not be less than ⅛" greater or more than ⅜" greater than the diameter of the threaded rods or as per the Manufacturer's recommendations. The holes will not be drilled using core bits. The drilled holes will be blown out with compressed air using a device that will reach the back of the hole to ensure that all debris or loose material has been removed prior to the epoxy injection.

The epoxy resin mixture will be of a type for bonding steel to hardened concrete and will conform to AASHTO M235 Type IV, Grade 3 (Equivalent to ASTM C881, Type IV, Grade 3).

Mix epoxy resin as recommended by the Manufacturer and apply by an injection method as approved by the Engineer. Beginning at the back of the drilled holes, fill the holes ⅓ to ½ full of epoxy, or as recommended by the Manufacturer, prior to insertion of the steel rod. Rotate the steel rod during installation to eliminate voids and ensure complete bonding of the rod. Insertion of the rods by the dipping or painting methods will not be allowed.

Loads will not be applied to the epoxy grouted threaded rods until the epoxy resin has had sufficient time to cure as specified by the epoxy resin Manufacturer.

September 14, 2019

Published Date: 3rd Qtr. 2022	SDDOT	TYPE 1 RETROFIT GUARDRAIL TRANSITION (CONCRETE END BLOCK TO MIDWEST GUARDRAIL SYSTEM (MGS))	PLATE NUMBER 630.51 Sheet 2 of 3

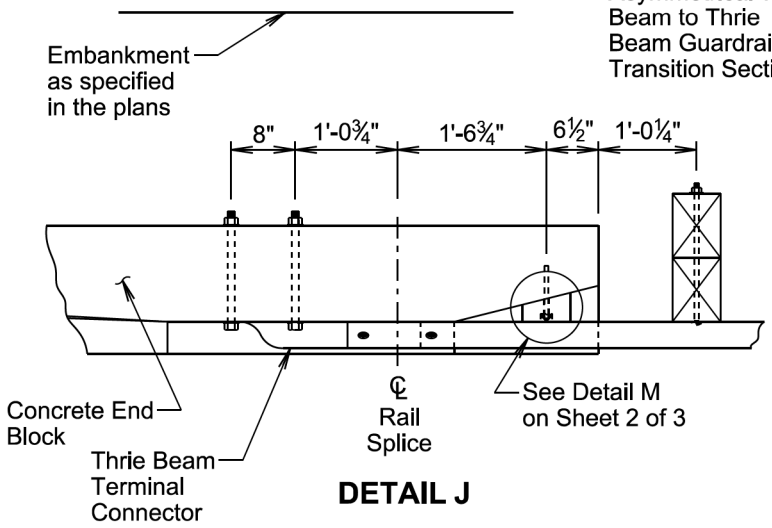

DETAIL J

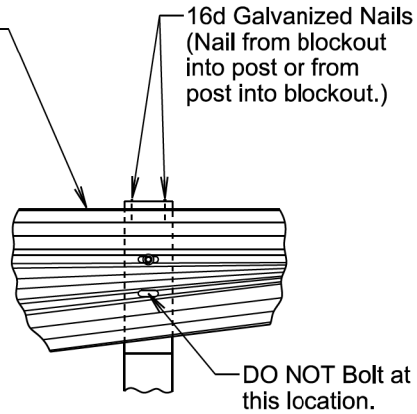

DETAIL L

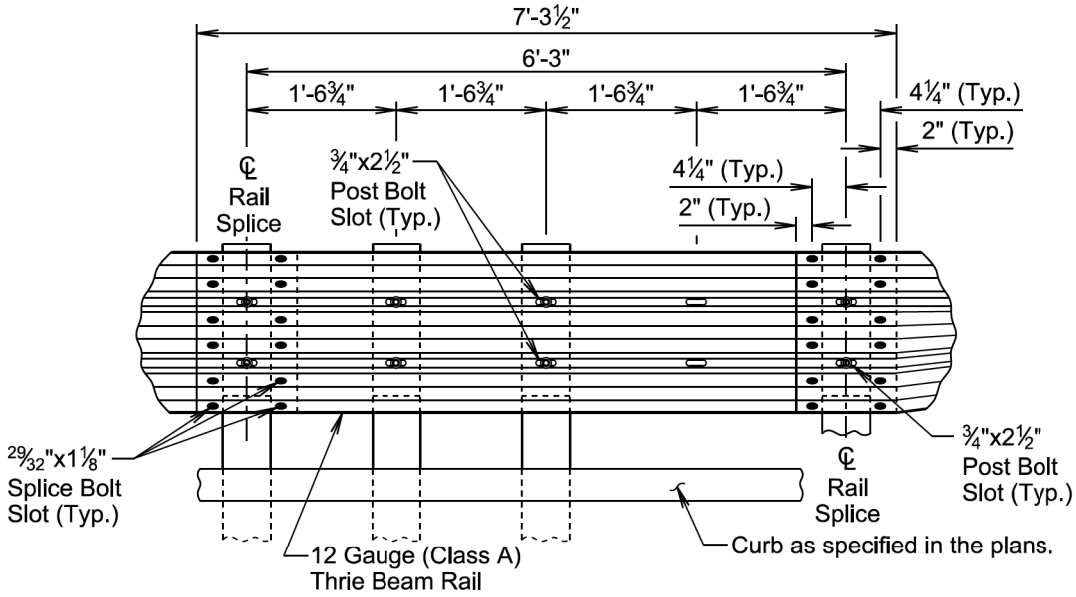

DETAIL K
(Special Thrie Beam Rail)

GENERAL NOTES:

Throughout the type 1 retrofit guardrail transition, slots in the rails will be provided as specified in the plans and by the Manufacturer. A drilled hole through the rail is not allowed as a replacement for a slot. If the Contractor must create a slot, a cutting torch or plasma cutter is not allowed. The slot edges will be smooth and free of burrs or notches.

All costs for furnishing and installing the type 1 retrofit guardrail transition including labor, equipment, and materials which includes all rail sections, posts and blockouts, special blockout, hardware, and incidentals will be included in the contract unit price per each for "Type 1 Retrofit Guardrail Transition".

September 14, 2019

Published Date: 3rd Qtr. 2022	SDDOT	TYPE 1 RETROFIT GUARDRAIL TRANSITION (CONCRETE END BLOCK TO MIDWEST GUARDRAIL SYSTEM (MGS))	PLATE NUMBER 630.51 Sheet 3 of 3

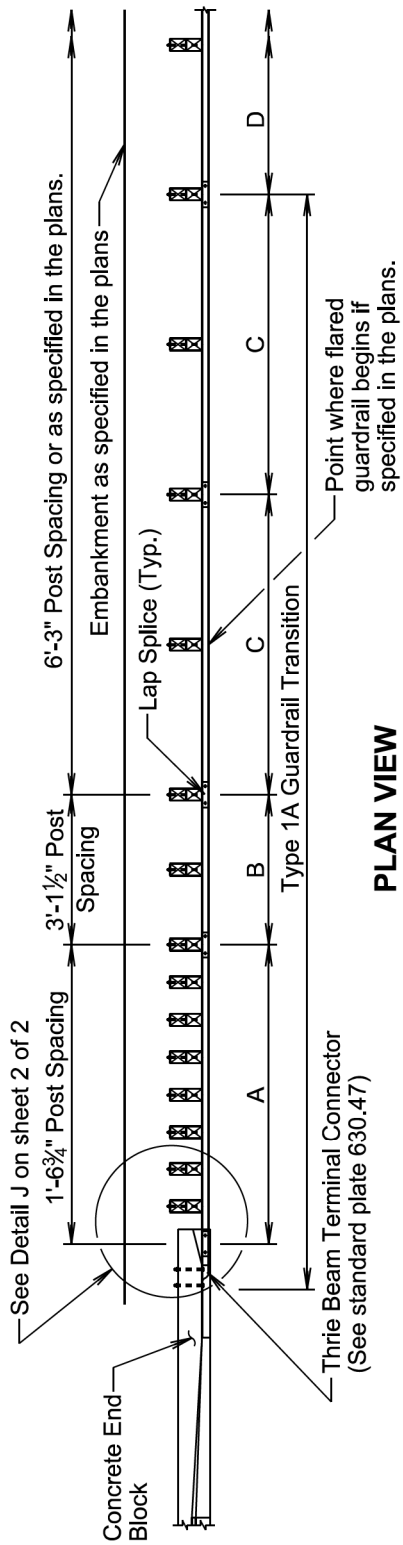

PLAN VIEW
(Curb Not Shown)

A: 12'-6" Straight Double (Nested) Class A Thrie Beam Guardrail with Wood Posts (See standard plate 630.01)
B: 6'-3" W Beam to Thrie Beam Guardrail Transition Section with Wood Posts (See standard plate 630.48)
C: 12'-6" Straight Class A W Beam Guardrail with Wood Posts (See standard plate 630.10) or as specified in the plans.
D: Guardrail as specified in the plans.

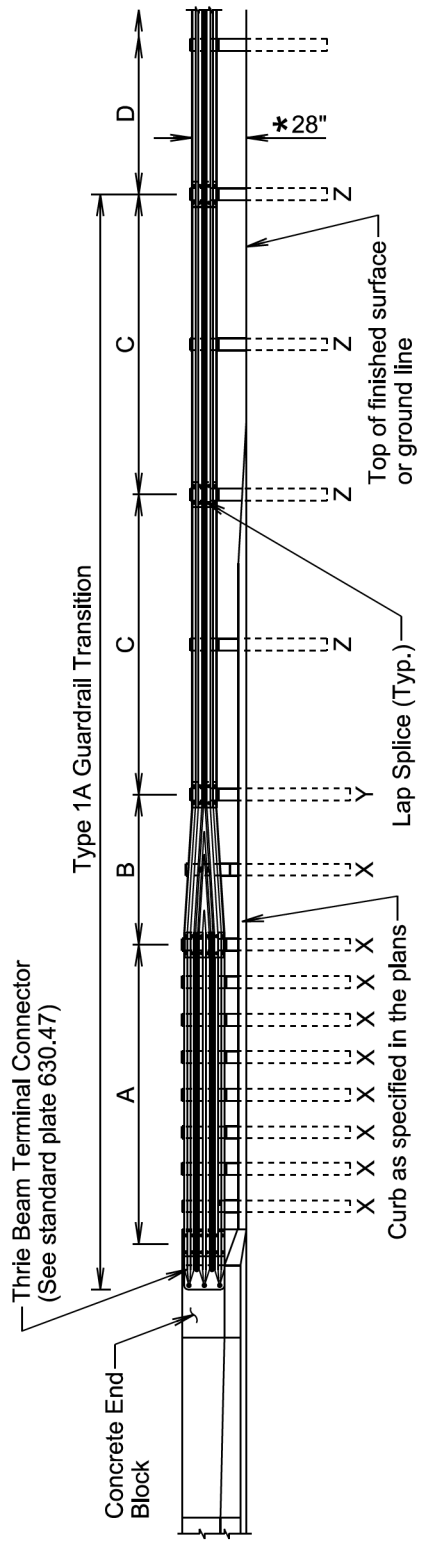

ELEVATION VIEW

* See standard plate 630.99

X: 6"x8"x7'-0" Wood Post and 6"x8"x21¾" Wood Blockout
Y: 6"x8"x7'-0" Wood Post and 6"x8"x14" Wood Blockout
Z: 6"x8"x6'-0" Wood Post and 6"x8"x14" Wood Blockout

November 19, 2021

Published Date: 3rd Qtr. 2022	SDDOT	TYPE 1A GUARDRAIL TRANSITION (CONCRETE END BLOCK TO W BEAM GUARDRAIL)	PLATE NUMBER 630.52 Sheet 1 of 2

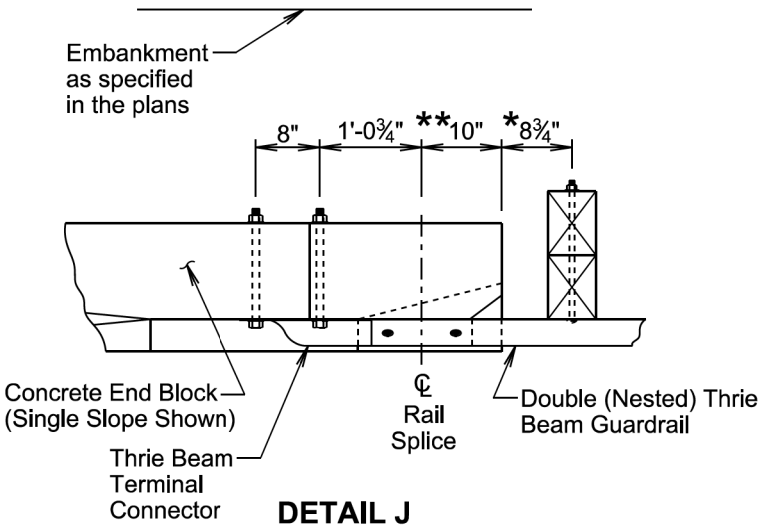

DETAIL J

Jersey Barrier Dimensions are **7¼" and *11½"

GENERAL NOTES:

Throughout the type 1A guardrail transition, slots in the rails will be provided as specified in the plans and by the manufacturer. A drilled hole through the rail is not allowed as a replacement for a slot. If the Contractor must create a slot, a cutting torch or plasma cutter is not allowed. The slot edges will be smooth and free of burrs or notches.

All costs for furnishing and installing the straight double class A thrie beam guardrail including labor, equipment, and materials including the thrie beam rails, posts, blockouts, thrie beam terminal connector, and hardware will be incidental to the contract unit price per foot for "Straight Double Class A Thrie Beam Guardrail with Wood Posts".

All costs for furnishing and installing the type 1A guardrail transition including labor, equipment, and materials will be included in the contract unit price for the respective guardrail contract items.

November 19, 2021

Published Date: 3rd Qtr. 2022	SDDOT	TYPE 1A GUARDRAIL TRANSITION (CONCRETE END BLOCK TO W BEAM GUARDRAIL)	PLATE NUMBER 630.52 Sheet 2 of 2

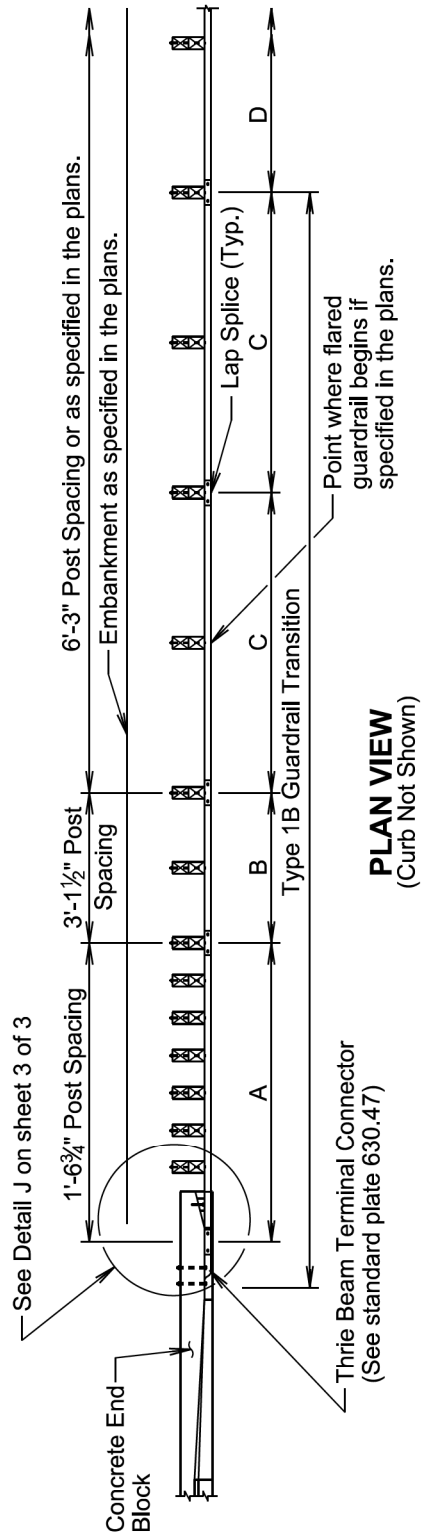

PLAN VIEW
(Curb Not Shown)

A: 12'-6" Straight Double (Nested) Class A Thrie Beam Guardrail with Wood Posts (See standard plate 630.01)
B: 6'-3" W Beam to Thrie Beam Guardrail Transition Section with Wood Posts (See standard plate 630.48)
C: 12'-6" Straight Class A W Beam Guardrail with Wood Posts (See standard plate 630.10) or as specified in the plans.
D: Guardrail as specified in the plans.

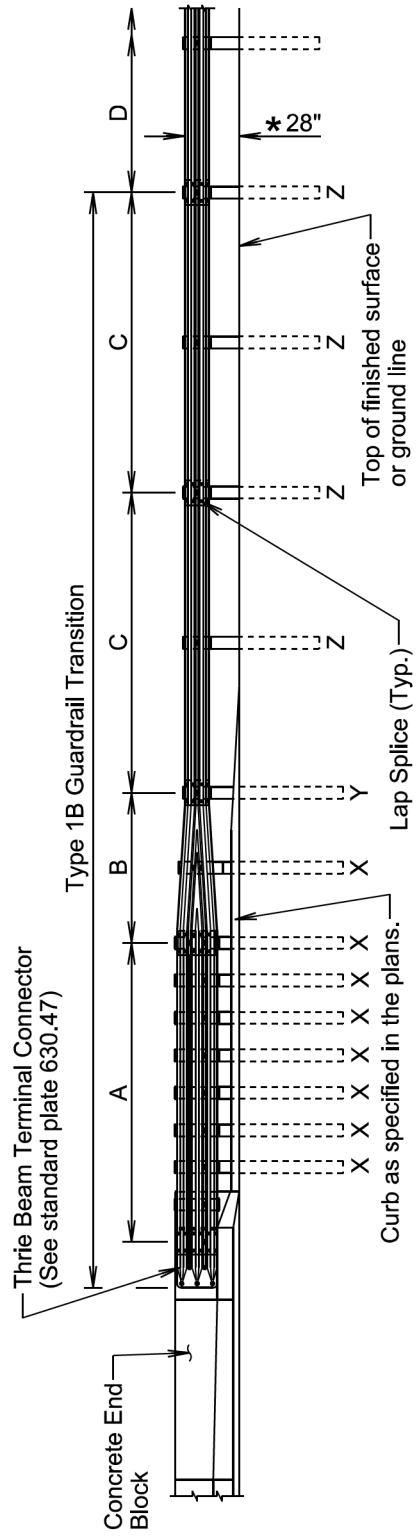

ELEVATION VIEW

*See standard plate 630.99

X: 6"x8"x7'-0" Wood Post and 6"x8"x21¾" Wood Blockout
Y: 6"x8"x7'-0" Wood Post and 6"x8"x14" Wood Blockout
Z: 6"x8"x6'-0" Wood Post and 6"x8"x14" Wood Blockout

September 14, 2019

Published Date: 3rd Qtr. 2022	SDDOT	TYPE 1B GUARDRAIL TRANSITION (CONCRETE END BLOCK TO W BEAM GUARDRAIL)	PLATE NUMBER 630.53 Sheet 1 of 3

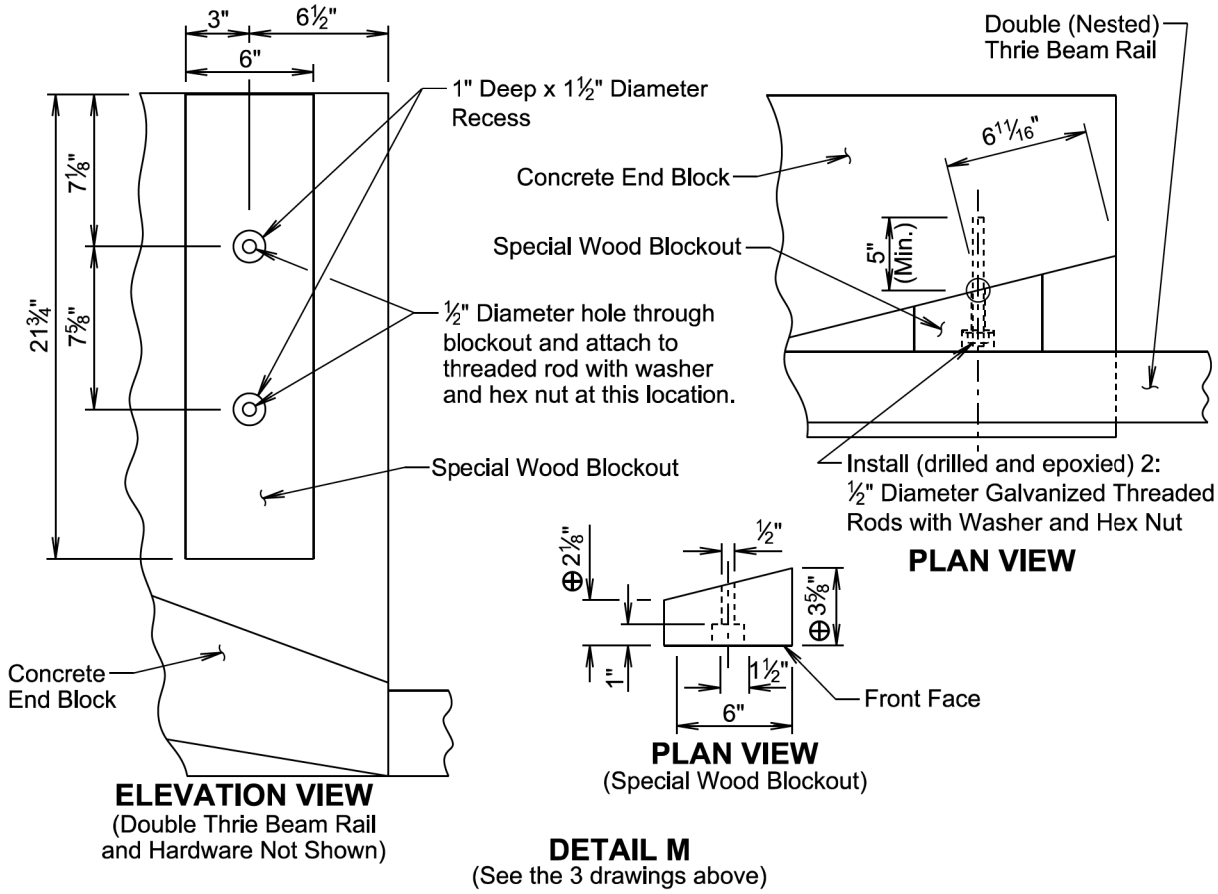

GENERAL NOTES FOR INSTALLING THREADED RODS INTO CONCRETE:

⊕ The dimensions shown are estimated based on original construction plans of the concrete end block. The special wood blockout will be cut as necessary such that the front face of the special wood blockout will align with the vertical front face of the concrete end block ±½".

The threaded rods will be ½" diameter and conform to ASTM F1554, Grade 55. The threaded rods will be embedded a minimum of 5" into the concrete.

The diameter of the drilled holes will not be less than ⅛" greater or more than ⅜" greater than the diameter of the threaded rods or as per the Manufacturer's recommendations. The holes will not be drilled using core bits. The drilled holes will be blown out with compressed air using a device that will reach the back of the hole to ensure that all debris or loose material has been removed prior to the epoxy injection.

The epoxy resin mixture will be of a type for bonding steel to hardened concrete and will conform to AASHTO M235 Type IV, Grade 3 (Equivalent to ASTM C881, Type IV, Grade 3).

Mix epoxy resin as recommended by the Manufacturer and apply by an injection method as approved by the Engineer. Beginning at the back of the drilled holes, fill the holes ⅓ to ½ full of epoxy, or as recommended by the Manufacturer, prior to insertion of the steel rod. Rotate the steel rod during installation to eliminate voids and ensure complete bonding of the rod. Insertion of the rods by the dipping or painting methods will not be allowed.

Loads will not be applied to the epoxy grouted threaded rods until the epoxy resin has had sufficient time to cure as specified by the epoxy resin Manufacturer.

September 14, 2019

Published Date: 3rd Qtr. 2022	SDDOT	TYPE 1B GUARDRAIL TRANSITION (CONCRETE END BLOCK TO W BEAM GUARDRAIL)	PLATE NUMBER 630.53 Sheet 2 of 3

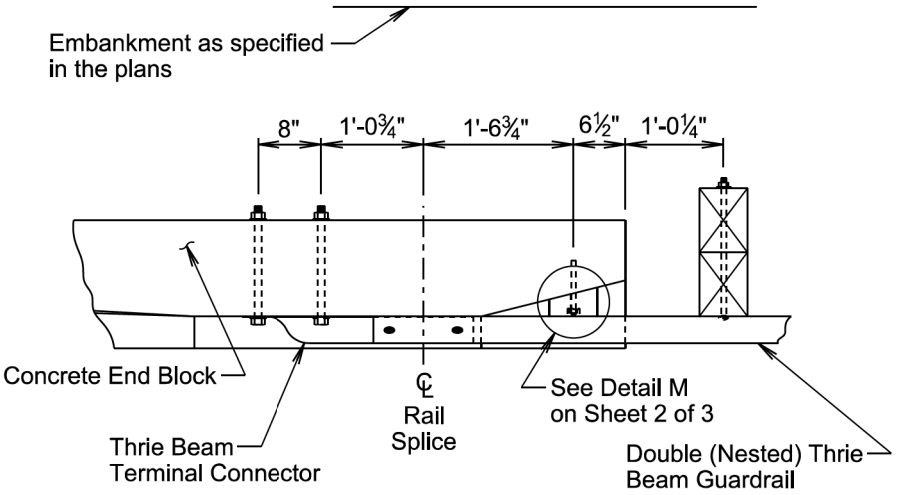

DETAIL J

GENERAL NOTES:

Throughout the type 1B guardrail transition, slots in the rails will be provided as specified in the plans and by the Manufacturer. A drilled hole through the rail is not allowed as a replacement for a slot. If the Contractor must create a slot, a cutting torch or plasma cutter is not allowed. The slot edges will be smooth and free of burrs or notches.

All costs for furnishing and installing the straight double class A thrie beam guardrail including labor, equipment, and materials including the thrie beam rails, posts, blockouts, special blockout, thrie beam terminal connector, and hardware will be incidental to the contract unit price per foot for "Straight Double Class A Thrie Beam Guardrail with Wood Posts".

All costs for furnishing and installing the type 1B guardrail transition including labor, equipment, and materials will be included in the contract unit price for the respective guardrail contract items.

September 14, 2019

Published Date: 3rd Qtr. 2022	SDDOT	TYPE 1B GUARDRAIL TRANSITION (CONCRETE END BLOCK TO W BEAM GUARDRAIL)	PLATE NUMBER 630.53 Sheet 3 of 3

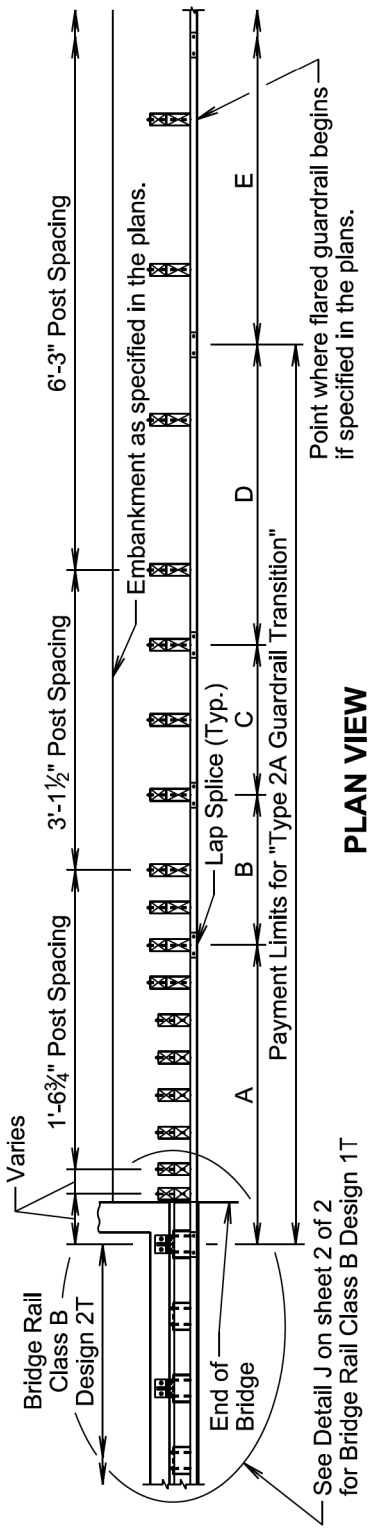

PLAN VIEW
(Curb Not Shown)

A: 12'-6" Straight Double (Nested) Class A Thrie Beam Guardrail with Wood Posts (See standard plate 630.01)
B: 6'-3" Straight Single Class A Thrie Beam Guardrail with Wood Posts (See Detail K on sheet 2 of 2)
C: 6'-3" Asymmetrical W Beam to Thrie Beam Guardrail Transition Section with Wood Posts (See standard plate 630.49)
D: 12'-6" Straight Type 4 MGS (See standard plate 630.20)
E: Straight Type 1 MGS or as specified in the plans (See standard plate 630.20)

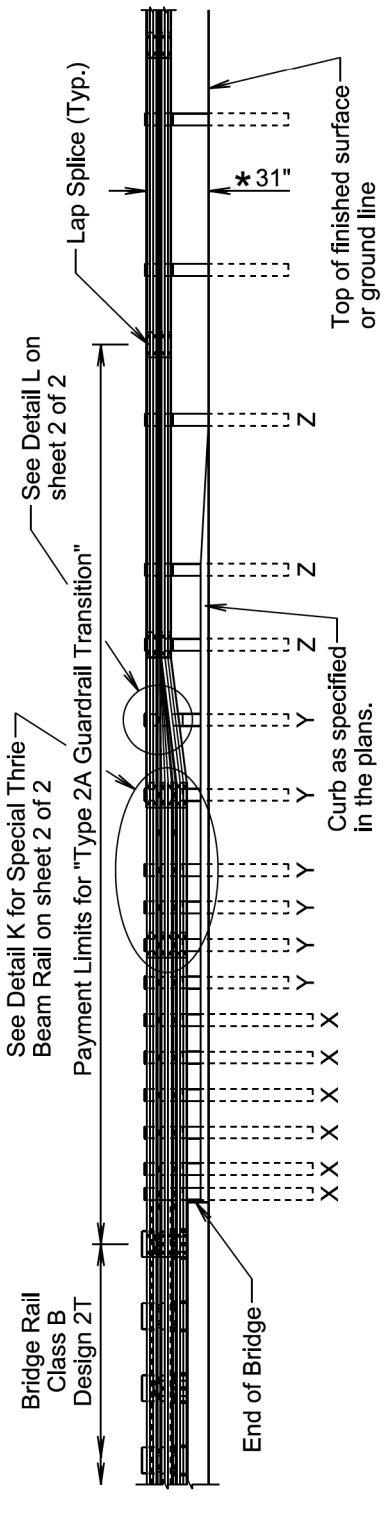

ELEVATION VIEW

* See standard plate 630.99

X: 6"x8"x7'-0" Wood Post and 6"x8"x19" Wood Blockout
Y: 6"x8"x6'-0" Wood Post and 6"x12"x19" Wood Blockout
Z: 6"x8"x6'-0" Wood Post and 6"x12"x14" Wood Blockout

September 14, 2019

Published Date: 3rd Qtr. 2022	SDDOT	TYPE 2A GUARDRAIL TRANSITION (BRIDGE RAIL CLASS B DESIGN 1T OR 2T TO MIDWEST GUARDRAIL SYSTEM (MGS))	PLATE NUMBER 630.54 Sheet 1 of 2

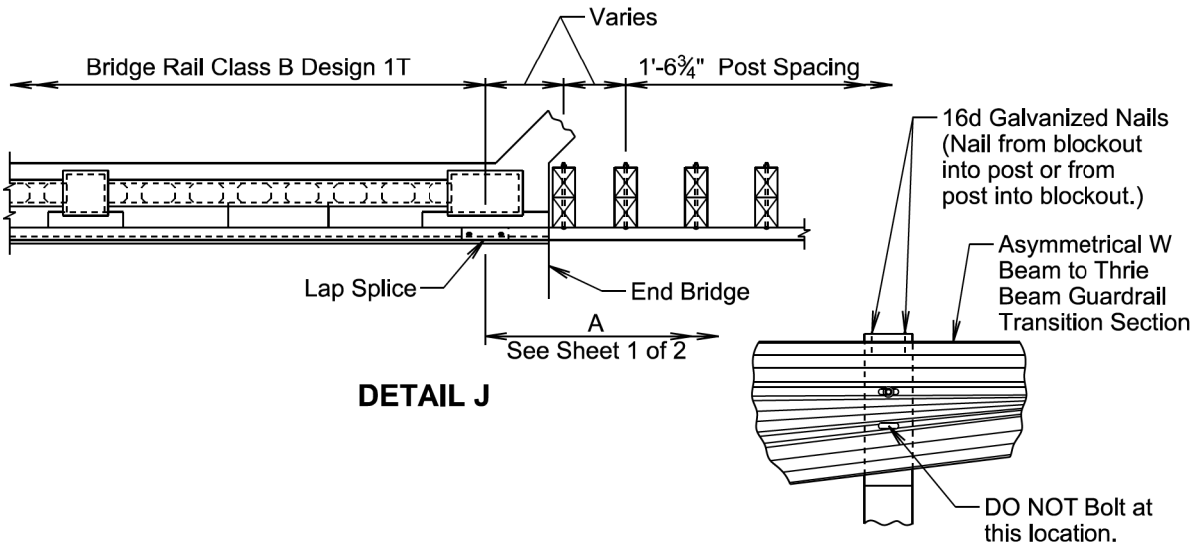

DETAIL J

DETAIL L

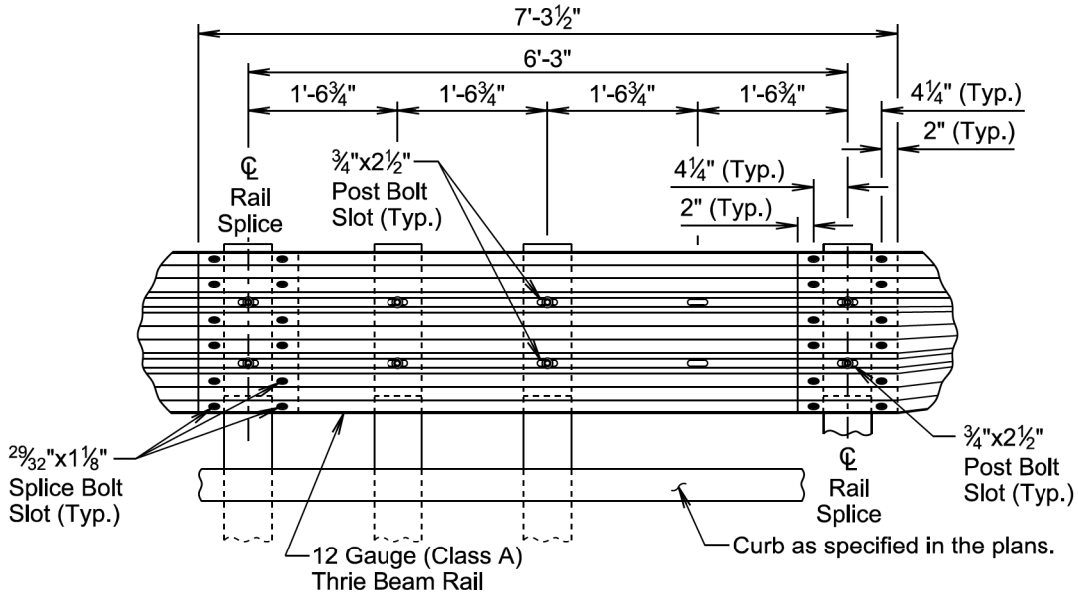

DETAIL K
(Special Thrie Beam Rail)

GENERAL NOTES:

Throughout the type 2A guardrail transition, slots in the rails will be provided as specified in the plans and by the manufacturer. A drilled hole through the rail is not allowed as a replacement for a slot. If the Contractor must create a slot, a cutting torch or plasma cutter is not allowed. The slot edges will be smooth and free of burrs or notches.

All costs for furnishing and installing the type 2A guardrail transition including labor, equipment, and materials which includes all rail sections, posts and blockouts, hardware, and incidentals will be included in the contract unit price per each for "Type 2A Guardrail Transition".

September 14, 2019

Published Date: 3rd Qtr. 2022	SDDOT	TYPE 2A GUARDRAIL TRANSITION (BRIDGE RAIL CLASS B DESIGN 1T OR 2T TO MIDWEST GUARDRAIL SYSTEM (MGS))	PLATE NUMBER 630.54 Sheet 2 of 2

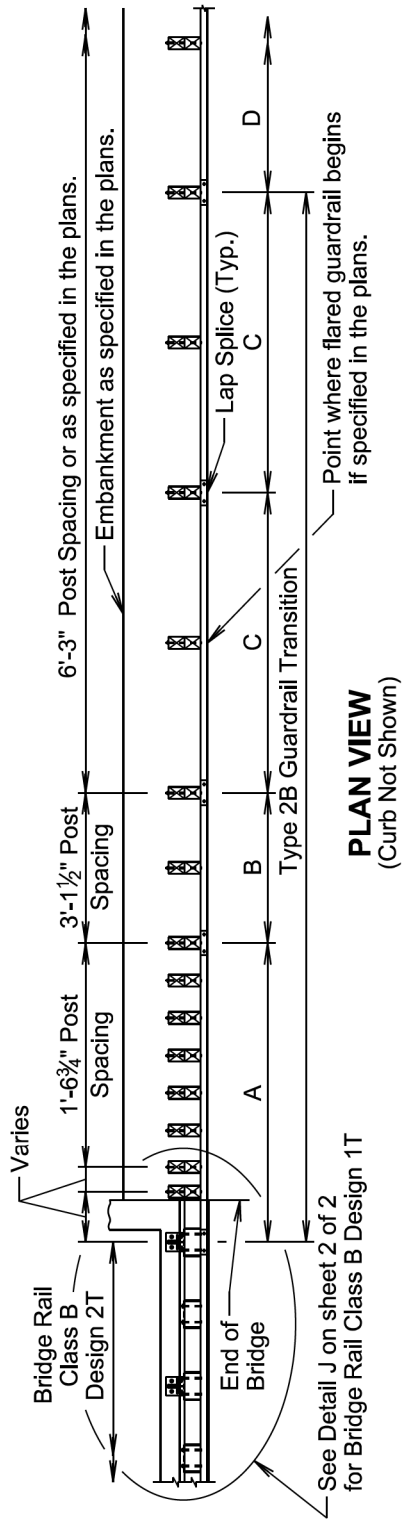

PLAN VIEW
(Curb Not Shown)

A: 12'-6" Straight Double (Nested) Class A Thrie Beam Guardrail with Wood Posts (See standard plate 630.01)
B: 6'-3" W Beam to Thrie Beam Guardrail Transition Section with Wood Posts (See standard plate 630.48)
C: 12'-6" Straight Class A W Beam Guardrail with Wood Posts (See standard plate 630.10) or as specified in the plans.
D: Guardrail as specified in the plans.

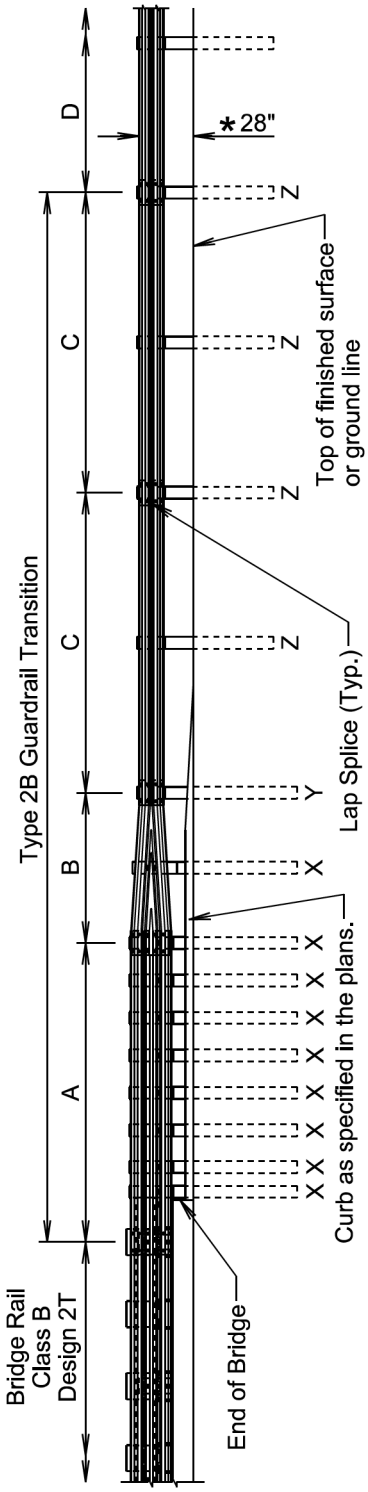

ELEVATION VIEW

*See standard plate 630.99

X: 6"x8"x7'-0" Wood Post and 6"x8"x21¾" Wood Blockout
Y: 6"x8"x7'-0" Wood Post and 6"x8"x14" Wood Blockout
Z: 6"x8"x6'-0" Wood Post and 6"x8"x14" Wood Blockout

September 14, 2019

Published Date: 3rd Qtr. 2022	SDDOT	TYPE 2B GUARDRAIL TRANSITION (BRIDGE RAIL CLASS B DESIGN 1T OR 2T TO W BEAM GUARDRAIL)	PLATE NUMBER 630.55 Sheet 1 of 2

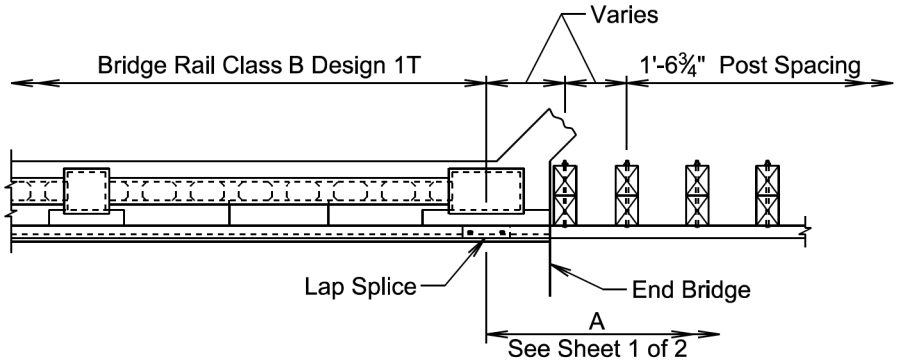

DETAIL J

GENERAL NOTES:

Throughout the type 2B guardrail transition, slots in the rails will be provided as specified in the plans and by the manufacturer. A drilled hole through the rail is not allowed as a replacement for a slot. If the Contractor must create a slot, a cutting torch or plasma cutter is not allowed. The slot edges will be smooth and free of burrs or notches.

All costs for furnishing and installing the type 2B guardrail transition including labor, equipment, and materials will be included in the contract unit price for the respective guardrail contract items.

September 14, 2019

Published Date: 3rd Qtr. 2022	SDDOT	TYPE 2B GUARDRAIL TRANSITION (BRIDGE RAIL CLASS B DESIGN 1T OR 2T TO W BEAM GUARDRAIL)	PLATE NUMBER 630.55 Sheet 2 of 2

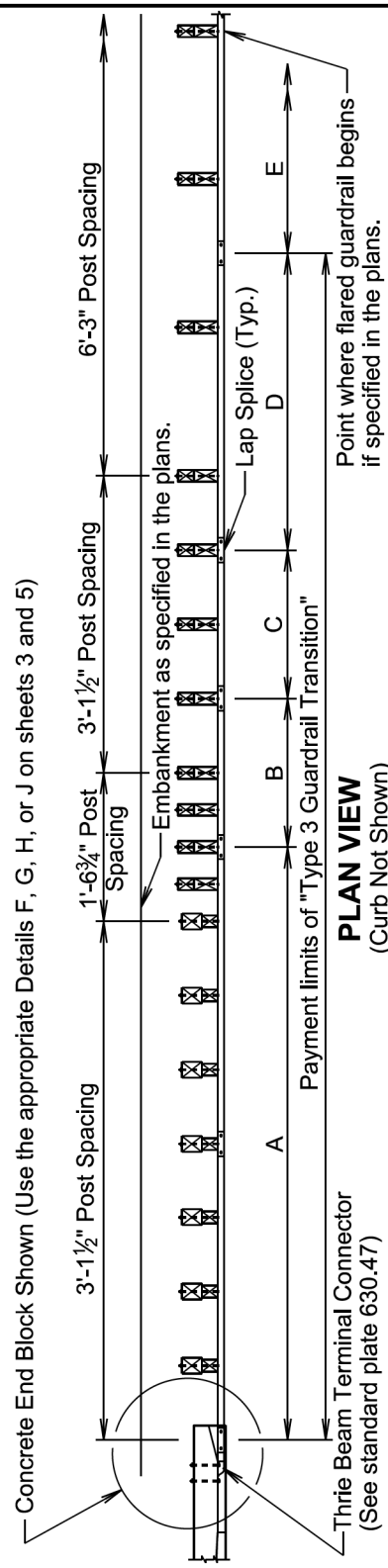

PLAN VIEW
(Curb Not Shown)

A: 25'-0" Straight Double (Nested) Class A Thrie Beam Guardrail with Wood Posts (See standard plate 630.01 and sheet 2 of 5)
B: 6'-3" Straight Single Class A Thrie Beam Guardrail with Wood Posts (See sheet 2 of 5 and Detail K on sheet 5 of 5)
C: 6'-3" Asymmetrical W Beam to Thrie Beam Guardrail Transition Section with Wood Posts (See standard plate 630.49)
D: 12'-6" Straight Type 4 MGS (See standard plate 630.20)
E: Straight Type 1 MGS or as specified in the plans (See standard plate 630.20)

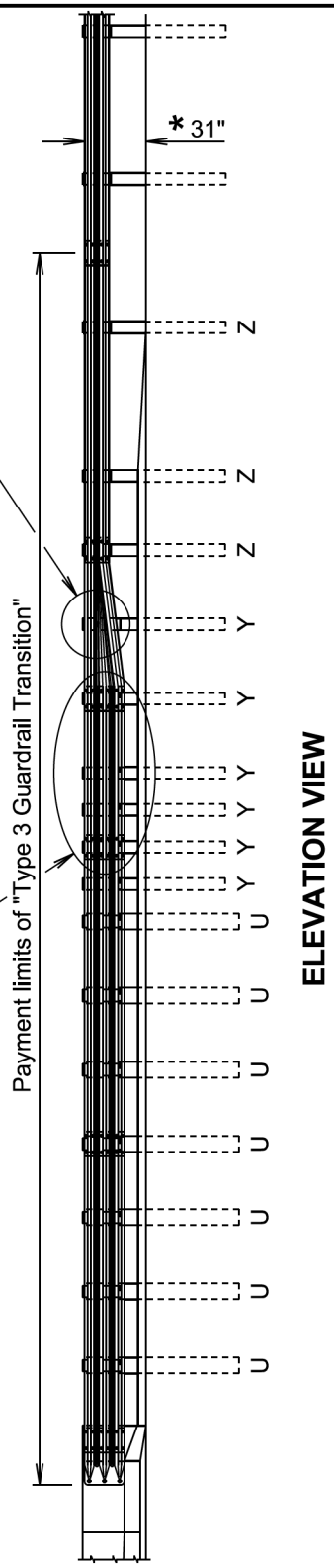

ELEVATION VIEW

U: 8"x10"x6'-6" Wood Post and 6"x8"x19" Wood Blockout
Y: 6"x8"x6'-0" Wood Post and 6"x12"x19" Wood Blockout
Z: 6"x8"x6'-0" Wood Post and 6"x12"x14" Wood Blockout
See sheet 2 of 5 for cross sections of U and Y.
See standard plate 630.20 for details of Z.

* See standard plate 630.99

September 22, 2021

Published Date: 3rd Qtr. 2022

SDDOT

TYPE 3 GUARDRAIL TRANSITION (VARIOUS BRIDGE RAILS AND CONCRETE END BLOCKS TO MIDWEST GUARDRAIL SYSTEM (MGS))

PLATE NUMBER
630.56

Sheet 1 of 5

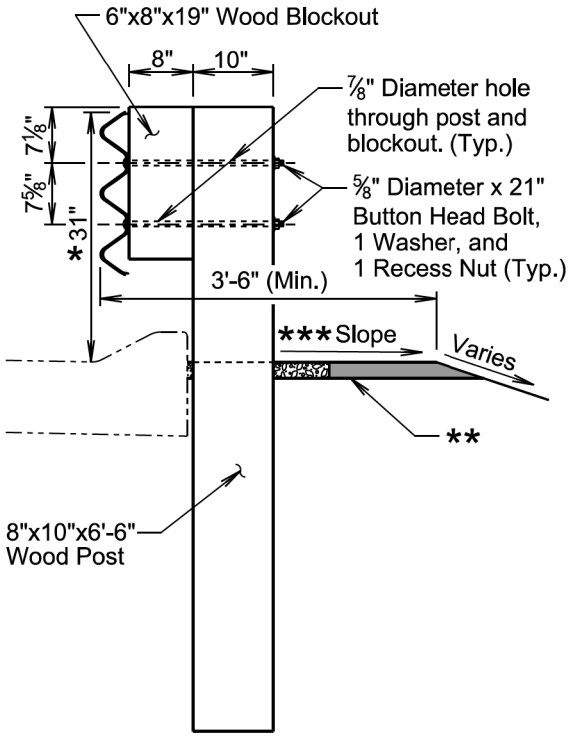

CROSS SECTION
(Post U)

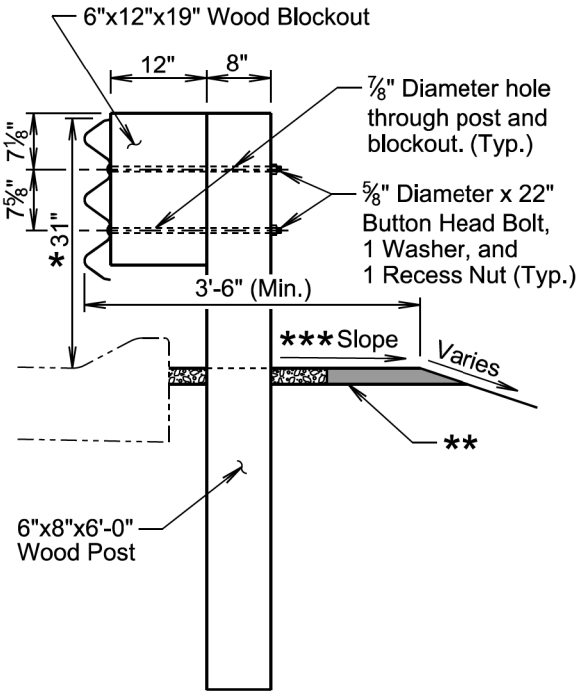

CROSS SECTION
(Post Y)
(Section through special single thrie beam rail portion)

* See standard plate 630.99

** 2" asphalt concrete or as specified in the plans and see standard plate 630.96 for leave-out and backfill requirements.

*** The cross slope will be as specified in the plans; however, the cross slope will not be steeper than a 10:1 slope.

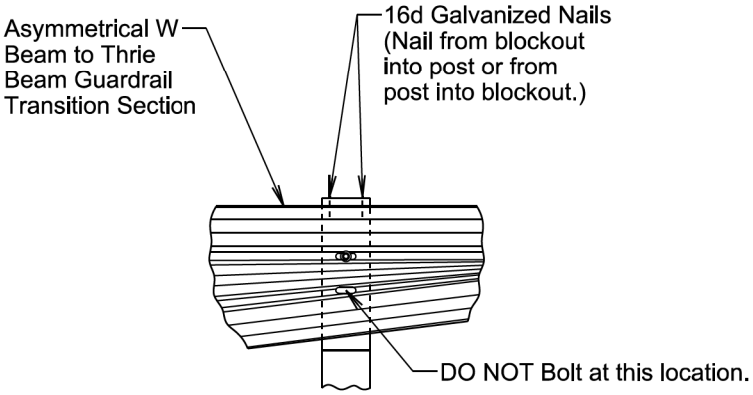

DETAIL L

September 22, 2021

Published Date: 3rd Qtr. 2022	SDDOT	TYPE 3 GUARDRAIL TRANSITION (VARIOUS BRIDGE RAILS AND CONCRETE END BLOCKS TO MIDWEST GUARDRAIL SYSTEM (MGS))	PLATE NUMBER 630.56 Sheet 2 of 5

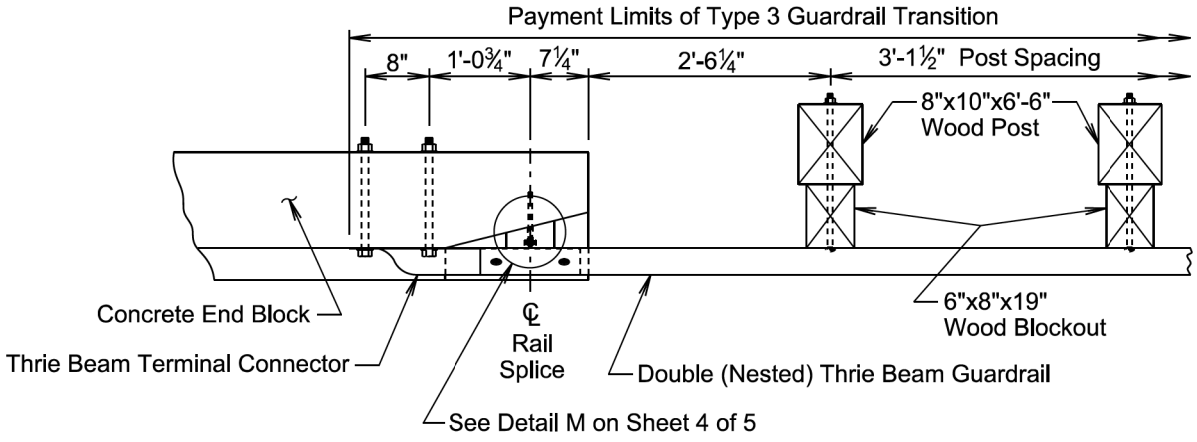

DETAIL F

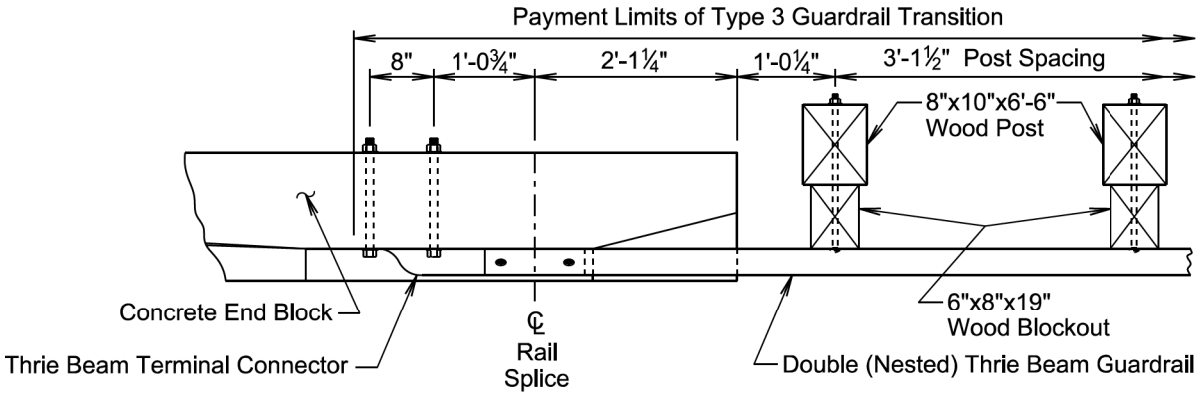

DETAIL G

September 22, 2021

Published Date: 3rd Qtr. 2022	SDDOT	TYPE 3 GUARDRAIL TRANSITION (VARIOUS BRIDGE RAILS OR CONCRETE END BLOCKS TO MIDWEST GUARDRAIL SYSTEM (MGS))	PLATE NUMBER 630.56 Sheet 3 of 5

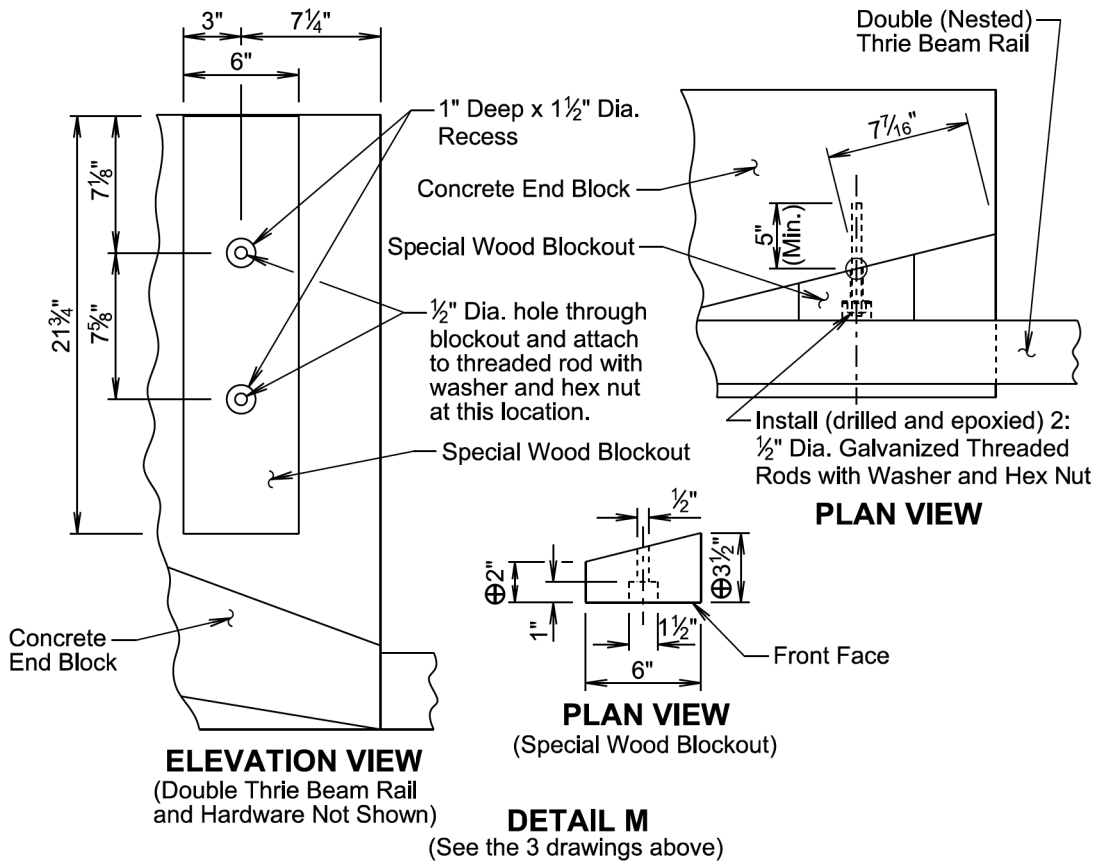

GENERAL NOTES FOR INSTALLING THREADED RODS INTO CONCRETE:

⊕ The dimensions shown are estimated based on original construction plans of the concrete end block. The special wood blockout will be cut as necessary such that the front face of the special wood blockout will align with the vertical front face of the concrete end block ± ½".

The threaded rods will be ½" diameter and conform to ASTM F1554, Grade 55. The threaded rods will be embedded a minimum of 5" into the concrete.

The diameter of the drilled holes will not be less than ⅛" greater or more than ⅜" greater than the diameter of the threaded rods or as per the Manufacturer's recommendations. The holes will not be drilled using core bits. The drilled holes will be blown out with compressed air using a device that will reach the back of the hole to ensure that all debris or loose material has been removed prior to the epoxy injection.

The epoxy resin mixture will be of a type for bonding steel to hardened concrete and will conform to AASHTO M235 Type IV, Grade 3 (Equivalent to ASTM C881, Type IV, Grade 3).

Mix epoxy resin as recommended by the Manufacturer and apply by an injection method as approved by the Engineer. Beginning at the back of the drilled holes, fill the holes ⅓ to ½ full of epoxy, or as recommended by the Manufacturer, prior to insertion of the steel rod. Rotate the steel rod during installation to eliminate voids and ensure complete bonding of the rod. Insertion of the rods by the dipping or painting methods will not be allowed.

Loads will not be applied to the epoxy grouted threaded rods until the epoxy resin has had sufficient time to cure as specified by the epoxy resin Manufacturer.

September 22, 2021

Published Date: 3rd Qtr. 2022	SDDOT	TYPE 3 GUARDRAIL TRANSITION (VARIOUS BRIDGE RAILS OR CONCRETE END BLOCKS TO MIDWEST GUARDRAIL SYSTEM (MGS))	PLATE NUMBER 630.56 Sheet 4 of 5

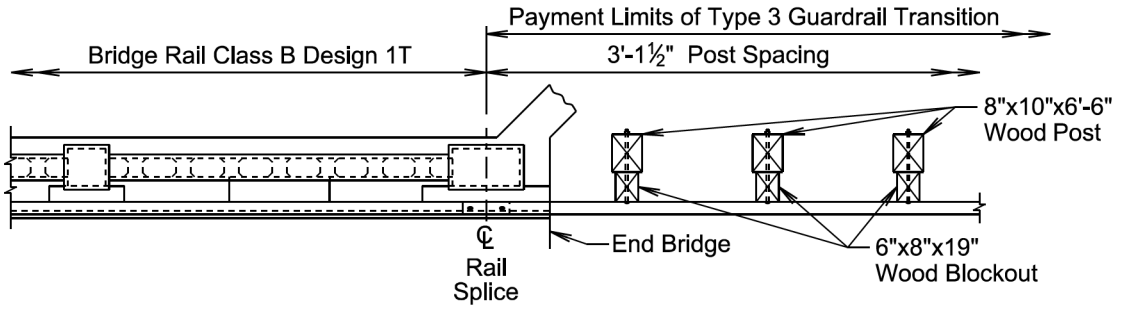

DETAIL H

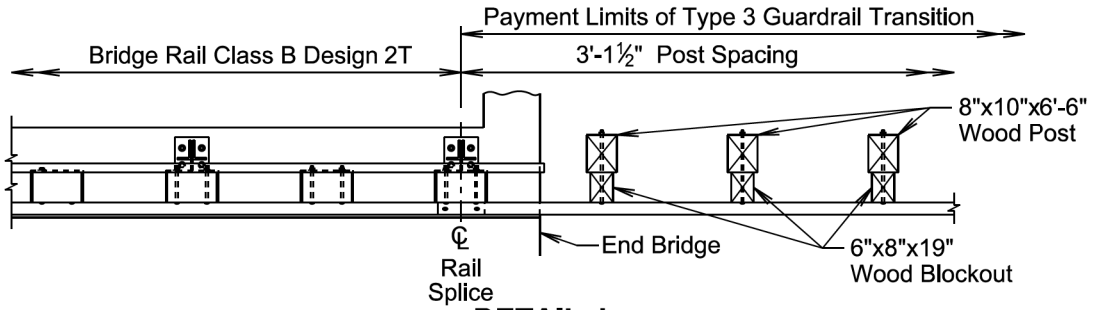

DETAIL J

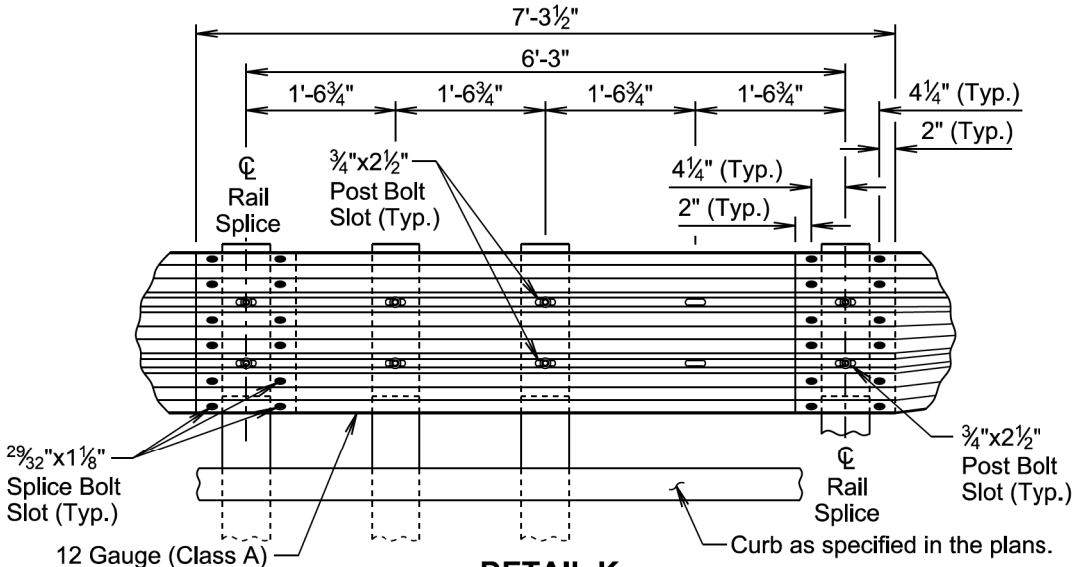

DETAIL K
(Special Thrie Beam Rail)

GENERAL NOTES:

Throughout the type 3 guardrail transition, slots in the rails will be provided as specified in the plans and by the manufacturer. A drilled hole through the rail is not allowed as a replacement for a slot. If the Contractor must create a slot, a cutting torch or plasma cutter is not allowed. The slot edges will be smooth and free of burrs or notches.

All costs for furnishing and installing the type 3 guardrail transition including labor, equipment, and materials which includes all rail sections, posts and blockouts, hardware, and incidentals will be included in the contract unit price per each for "Type 3 Guardrail Transition".

September 22, 2021

Published Date: 3rd Qtr. 2022	SDDOT	*TYPE 3 GUARDRAIL TRANSITION (VARIOUS BRIDGE RAILS AND CONCRETE END BLOCKS TO MIDWEST GUARDRAIL SYSTEM (MGS))*	*PLATE NUMBER* 630.56
			Sheet 5 of 5

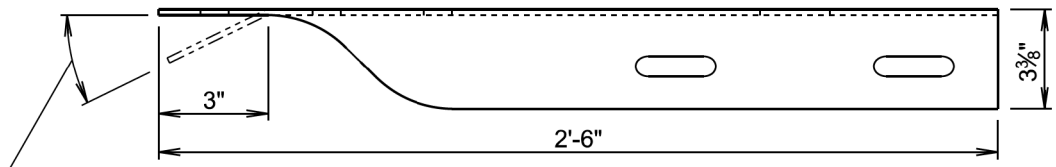

An extra hole and an approximate 26° bend will be required only for the Special Anchor Assembly and Breakaway Cable Terminal. The Modified W Beam Terminal Connector placement detail is shown on standard plates 630.84 and 630.85.

TOP VIEW
(W Beam Terminal Connector)

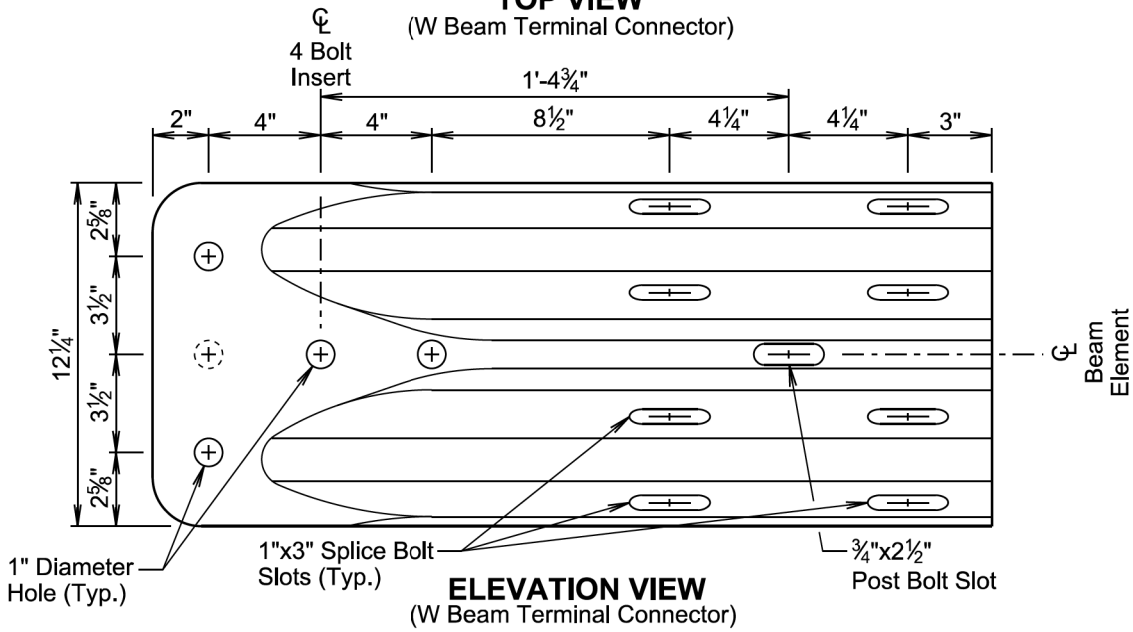

ELEVATION VIEW
(W Beam Terminal Connector)

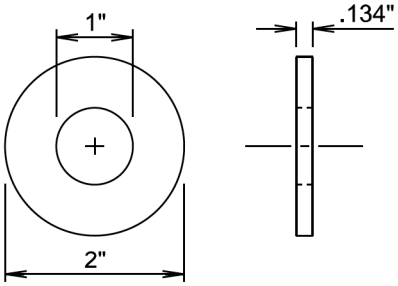

1" STEEL WASHER
(8 washers required)

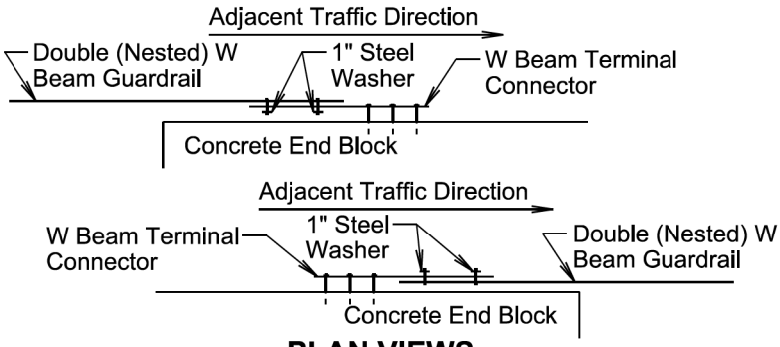

PLAN VIEWS
(Typical Locations of 1" Steel Washers)
(Washers are required at these lap splices)

GENERAL NOTES:

W Beam Terminal Connectors will be 10 gauge.

When the W beam terminal connector is used to connect the rail to the bridge or concrete end block, 1" steel washers will be used at the lap splice and the washers will be in direct contact with the 3" slots of the W beam terminal connector. See the drawings above for the typical locations of the 1" steel washers.

There will be no separate payment for furnishing and installing the W beam terminal connector. All costs for furnishing and installing the W beam terminal connector will be incidental to the contract unit price of the respective guardrail item it is attached to.

September 14, 2019

Published Date: 3rd Qtr. 2022	SDDOT	*W BEAM TERMINAL CONNECTOR*	*PLATE NUMBER* 630.59
			Sheet 1 of 1

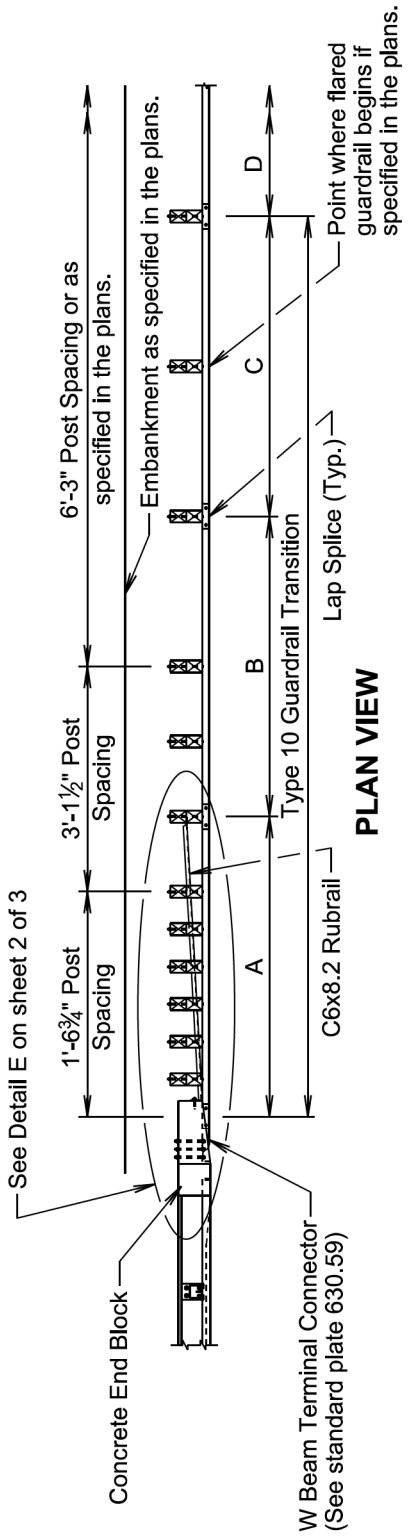

PLAN VIEW

A: 12'-6" Straight Double (Nested) Class B W Beam Guardrail with Wood Posts (See standard plate 630.10)
B: 12'-6" Straight Class B W Beam Guardrail with Wood Posts (See standard plate 630.10)
C: 12'-6" Straight Class A W Beam Guardrail with Wood Posts (See standard plate 630.10) or as specified in the plans.
D: Guardrail as specified in the plans.

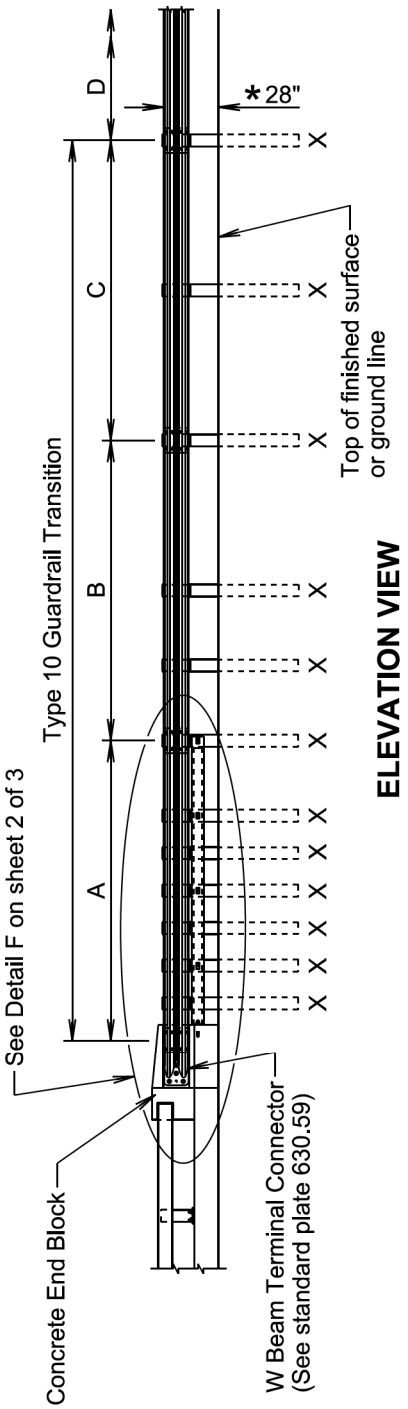

ELEVATION VIEW

* See standard plate 630.99

X: 6"x8"x6'-0" Wood Post and 6"x8"x14" Wood Blockout

September 14, 2019

Published Date: 3rd Qtr. 2022	SDDOT	TYPE 10 GUARDRAIL TRANSITION (CONCRETE END BLOCK TO W BEAM GUARDRAIL)	PLATE NUMBER 630.60 Sheet 1 of 3

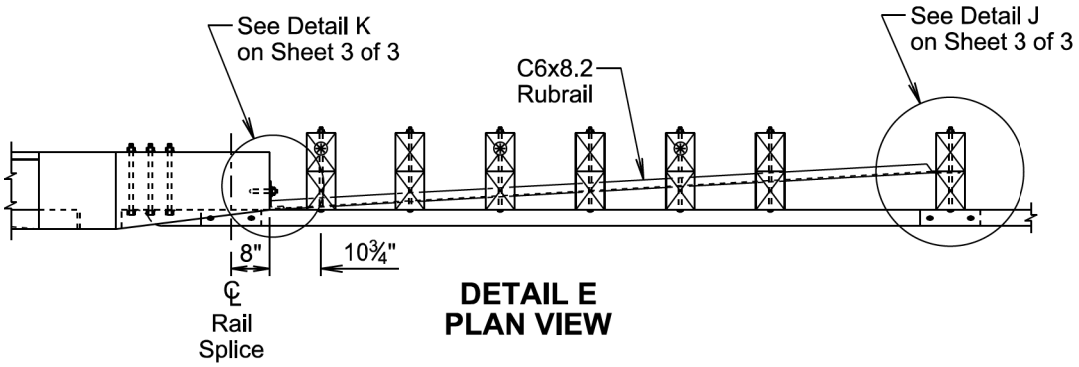

DETAIL E
PLAN VIEW

⊛ Rubrail will not be attached to these posts.

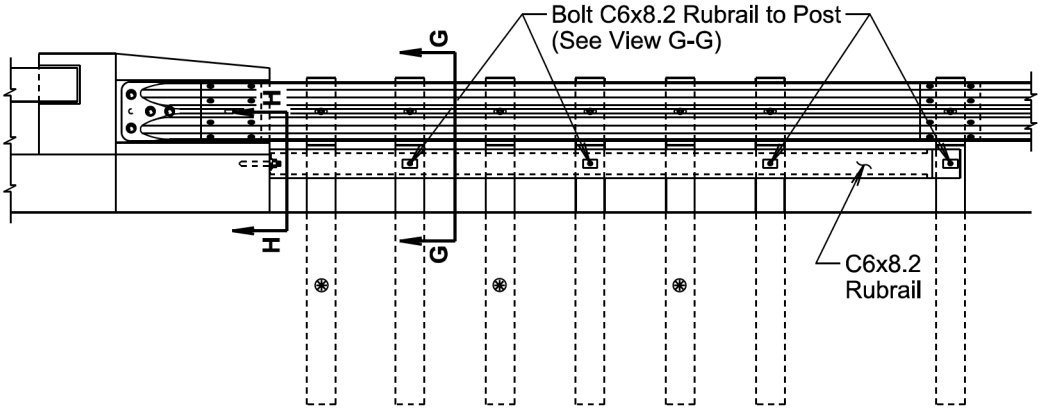

DETAIL F
ELEVATION VIEW

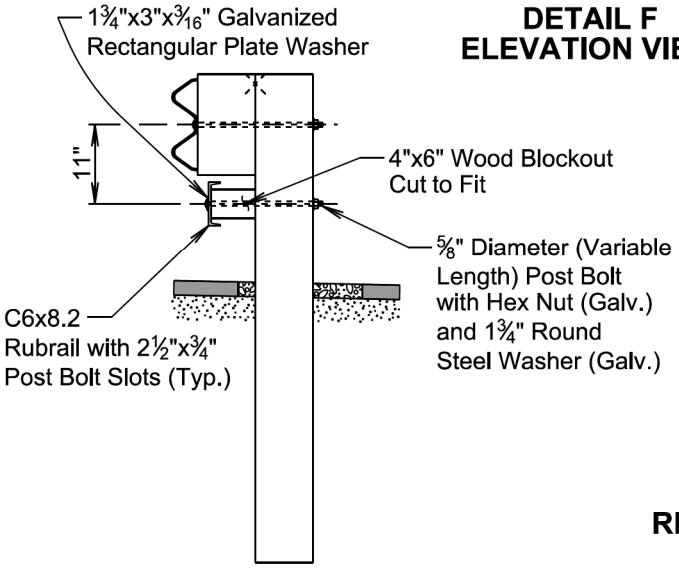

VIEW G-G

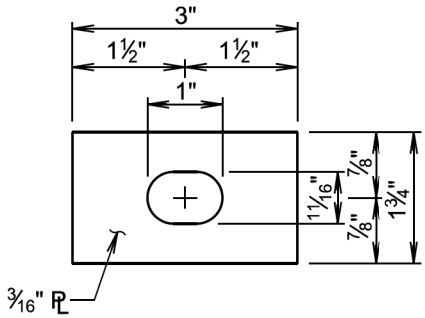

RECTANGULAR PLATE WASHER

September 14, 2019

Published Date: 3rd Qtr. 2022	SDDOT	TYPE 10 GUARDRAIL TRANSITION (CONCRETE END BLOCK TO W BEAM GUARDRAIL)	PLATE NUMBER 630.60 Sheet 2 of 3

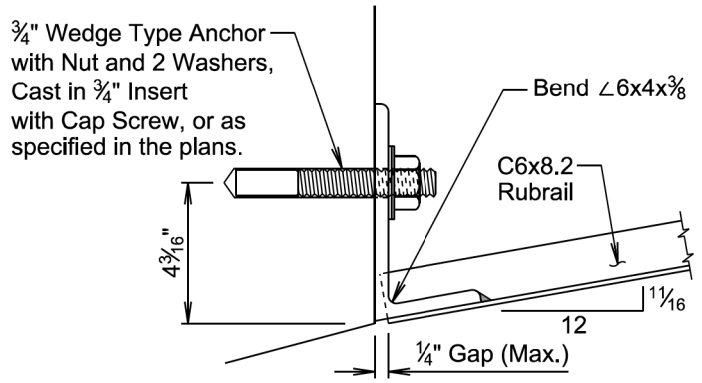

DETAIL K
(Double Class B Rail Not Shown)

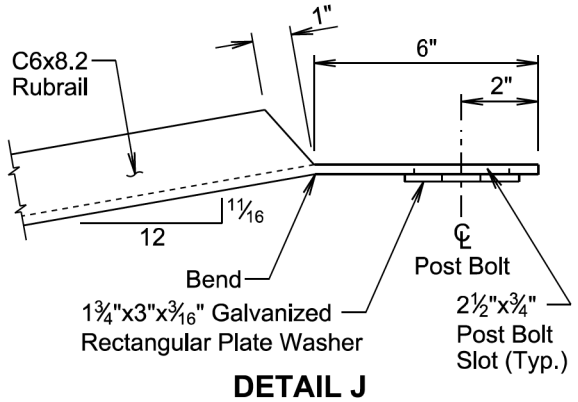

DETAIL J
(Post, Blockout, Post Bolt, and Rail Not Shown)

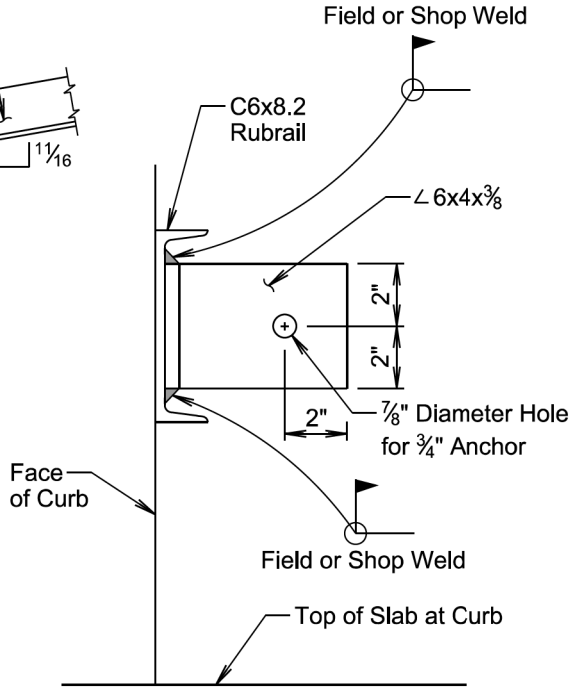

VIEW H-H
(Anchor and Rail Not Shown)

GENERAL NOTES:

Throughout the type 10 guardrail transition, slots in the rails will be provided as specified in the plans and by the manufacturer. A drilled hole through the rail is not allowed as a replacement for a slot. If the Contractor must create a slot, a cutting torch or plasma cutter is not allowed. The slot edges will be smooth and free of burrs or notches.

The rubrail steel will be in conformance with ASTM A36 and will be galvanized after fabrication in conformance with ASTM A123. If pre-galvanized steel members are used, all cuts and welds will be coated with an approved galvanizing paint.

The wedge type anchor bolt, nut, and washers will be hot dipped galvanized or made of a corrosion resistent material. The wedge type anchor will be capable of sustaining an ultimate load in tension or shear of 17,000 pounds when the anchor is set in 4,500 psi compressive strength concrete. The anchor will be installed according to the manufacturer's recommendations. The Contractor will obtain certification from the manufacturer that the anchor meets the tensile and shear requirements and will submit the certification to the Engineer. The cost for furnishing and installing the wedge type anchor, nut, and washers will be incidental to the contract unit price per foot for "Rubrail".

All costs for furnishing and installing the straight double class B W beam guardrail including labor, equipment, and materials including the W beam rails, posts, blockouts, W beam terminal connector, and hardware will be incidental to the contract unit price per foot for "Straight Double Class B W Beam Guardrail with Wood Posts".

All costs for furnishing and installing the type 10 guardrail transition including labor, equipment, and materials will be included in the contract unit price for the respective guardrail contract items.

September 14, 2019

Published Date: 3rd Qtr. 2022	SDDOT	TYPE 10 GUARDRAIL TRANSITION (CONCRETE END BLOCK TO W BEAM GUARDRAIL)	PLATE NUMBER 630.60 Sheet 3 of 3

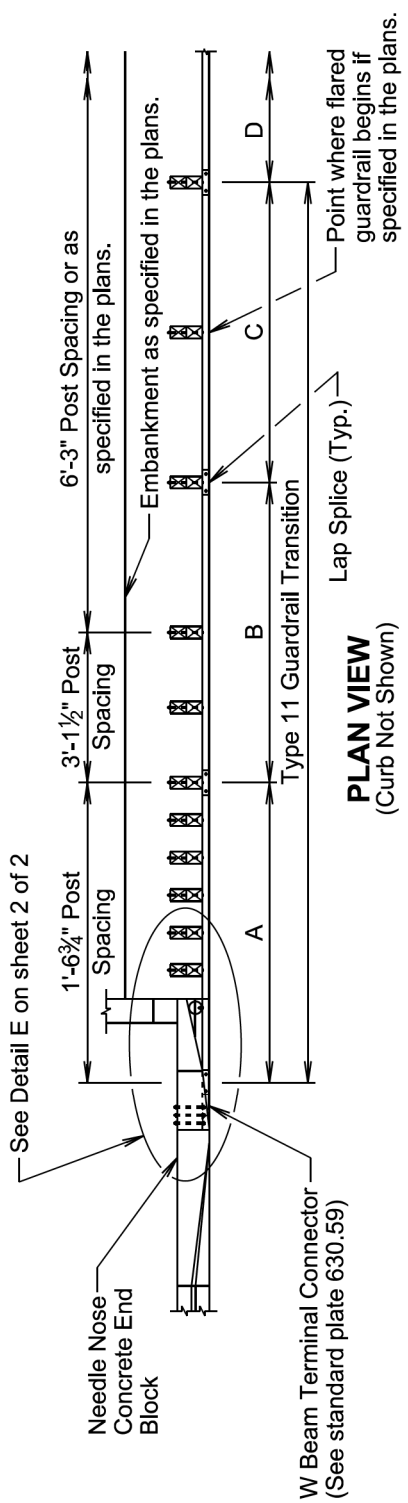

PLAN VIEW
(Curb Not Shown)

A: 12'-6" Straight Double (Nested) Class B W Beam Guardrail with Wood Posts (See standard plate 630.10)
B: 12'-6" Straight Class B W Beam Guardrail with Wood Posts (See standard plate 630.10)
C: 12'-6" Straight Class A W Beam Guardrail with Wood Posts (See standard plate 630.10) or as specified in the plans.
D: Guardrail as specified in the plans.

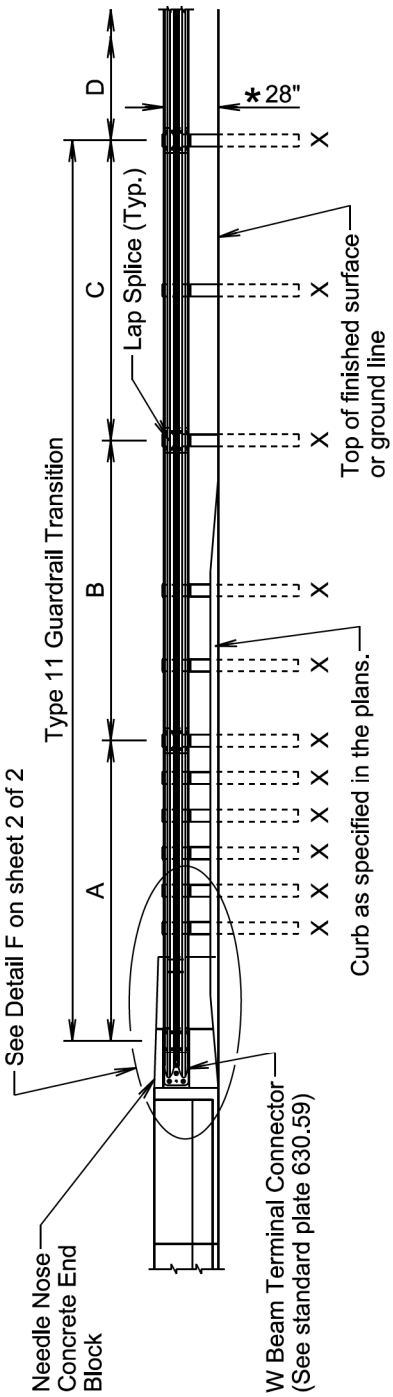

ELEVATION VIEW

* See standard plate 630.99

X: 6"x8"x6'-0" Wood Post and 6"x8"x14" Wood Blockout

September 14, 2019

Published Date: 3rd Qtr. 2022

SDDOT

TYPE 11 GUARDRAIL TRANSITION (NEEDLE NOSE CONCRETE END BLOCK TO W BEAM GUARDRAIL)

PLATE NUMBER
630.61

Sheet 1 of 2

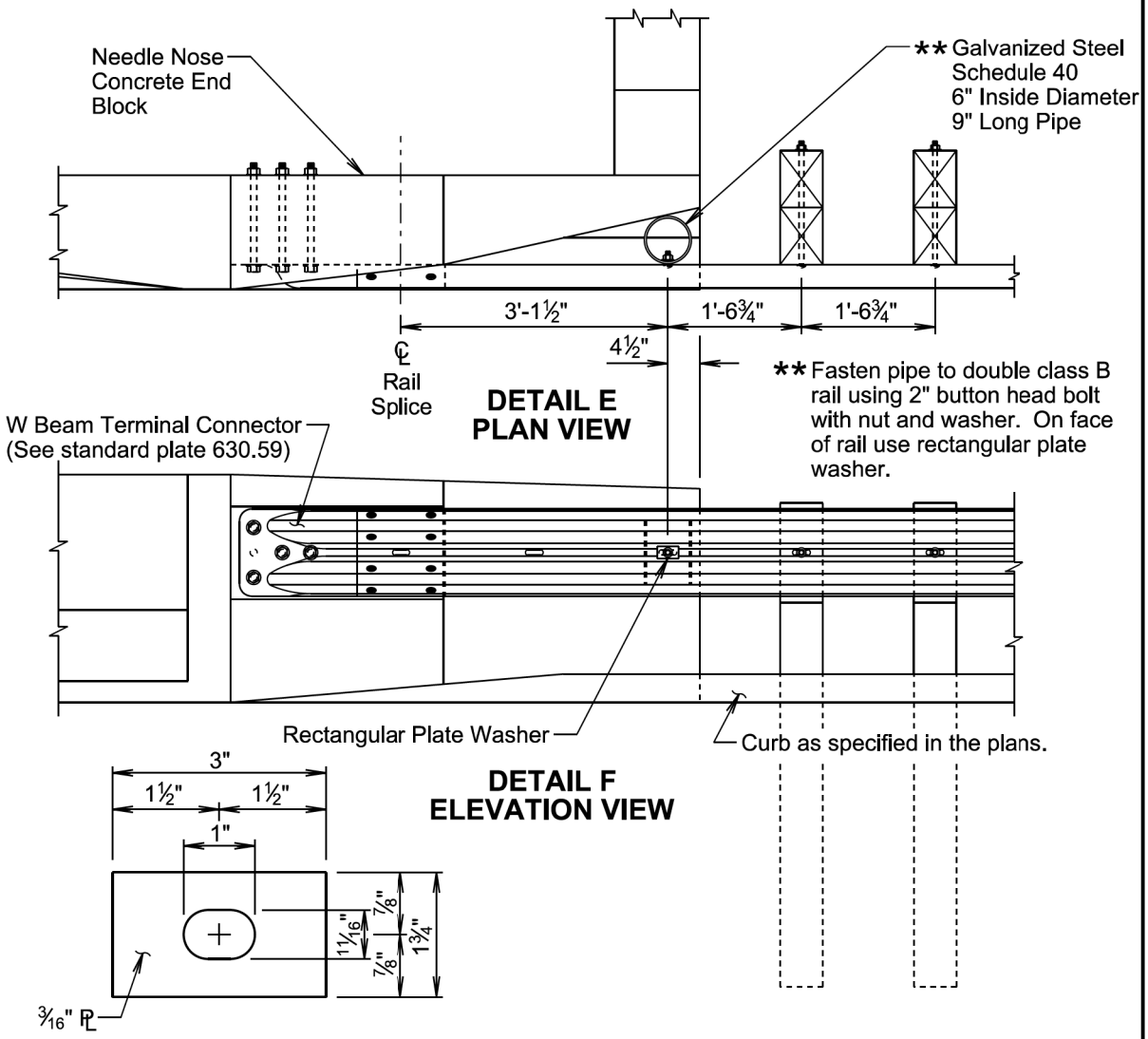

RECTANGULAR PLATE WASHER

GENERAL NOTES:

Throughout the type 11 guardrail transition, slots in the rails will be provided as specified in the plans and by the manufacturer. A drilled hole through the rail is not allowed as a replacement for a slot. If the Contractor must create a slot, a cutting torch or plasma cutter is not allowed. The slot edges will be smooth and free of burrs or notches.

All costs for furnishing and installing the straight double class B W beam guardrail including labor, equipment, and materials including the W beam rails, posts, blockouts, W beam terminal connector, steel pipe, and hardware will be incidental to the contract unit price per foot for "Straight Double Class B W Beam Guardrail with Wood Posts".

All costs for furnishing and installing the type 11 guardrail transition including labor, equipment, and materials will be included in the contract unit price for the respective guardrail contract items.

September 14, 2019

Published Date: 3rd Qtr. 2022	SDDOT	TYPE 11 GUARDRAIL TRANSITION (NEEDLE NOSE CONCRETE END BLOCK TO W BEAM GUARDRAIL)	PLATE NUMBER 630.61 Sheet 2 of 2

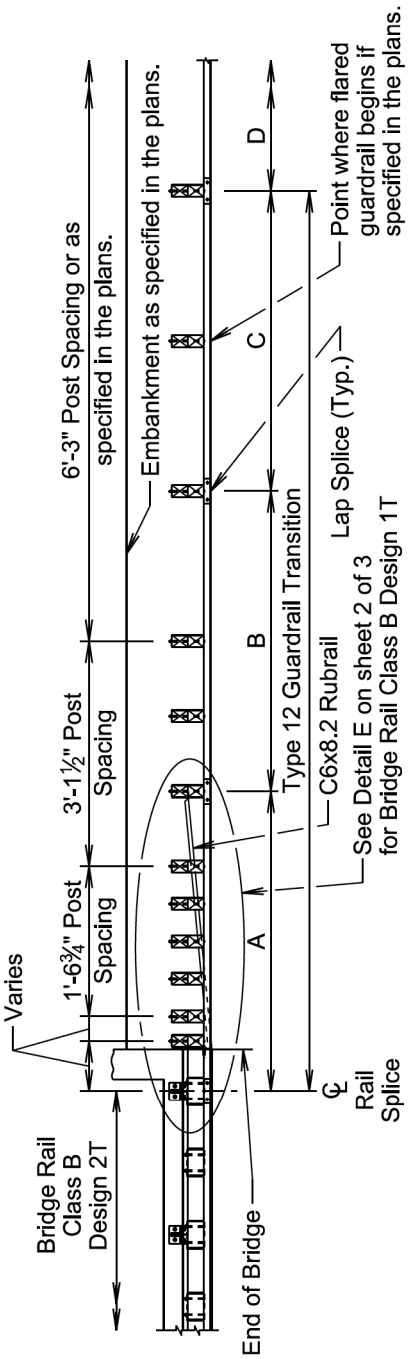

PLAN VIEW

A: 12'-6" Straight Double (Nested) Class B W Beam Guardrail with Wood Posts (See standard plate 630.10)
B: 12'-6" Straight Class B W Beam Guardrail with Wood Posts (See standard plate 630.10)
C: 12'-6" Straight Class A W Beam Guardrail with Wood Posts (See standard plate 630.10) or as specified in the plans.
D: Guardrail as specified in the plans.

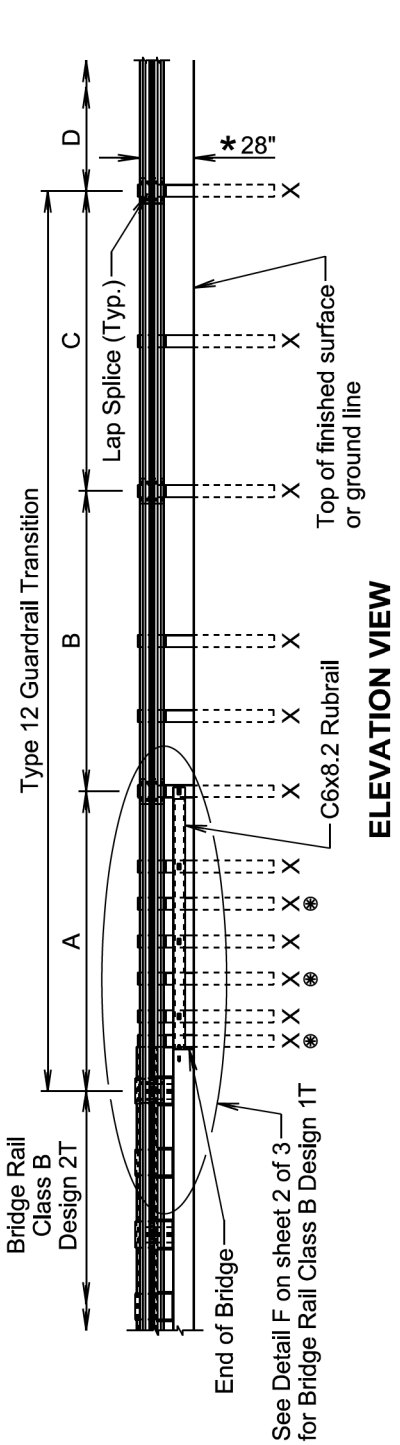

ELEVATION VIEW

* See standard plate 630.99

X: 6"x8"x6'-0" Wood Post and 6"x8"x14" Wood Blockout
❀ Rubrail will not be attached to these posts.

September 14, 2019

Published Date: 3rd Qtr. 2022	SDDOT	TYPE 12 GUARDRAIL TRANSITION (W BEAM BRIDGE RAIL CLASS B DESIGN 1T OR 2T TO W BEAM GUARDRAIL)	PLATE NUMBER 630.63 Sheet 1 of 3

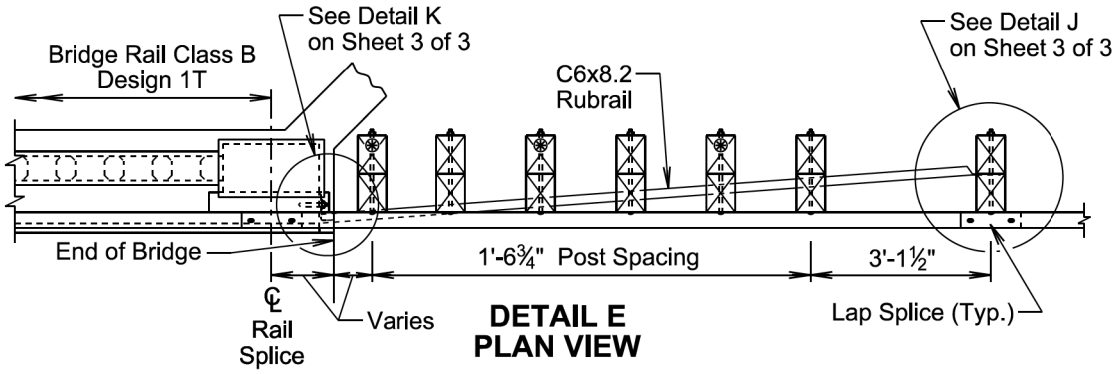

DETAIL E
PLAN VIEW

⊛ Rubrail will not be attached to these posts.

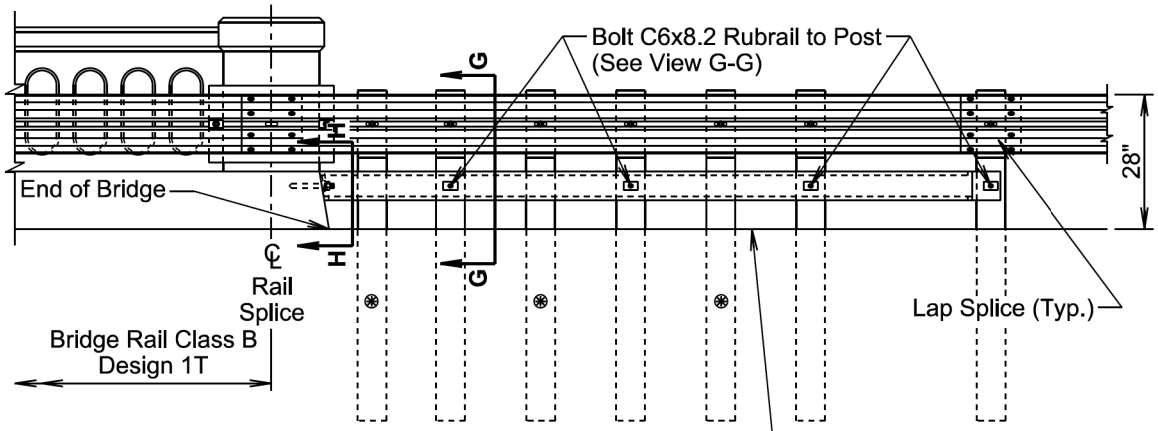

DETAIL F
ELEVATION VIEW

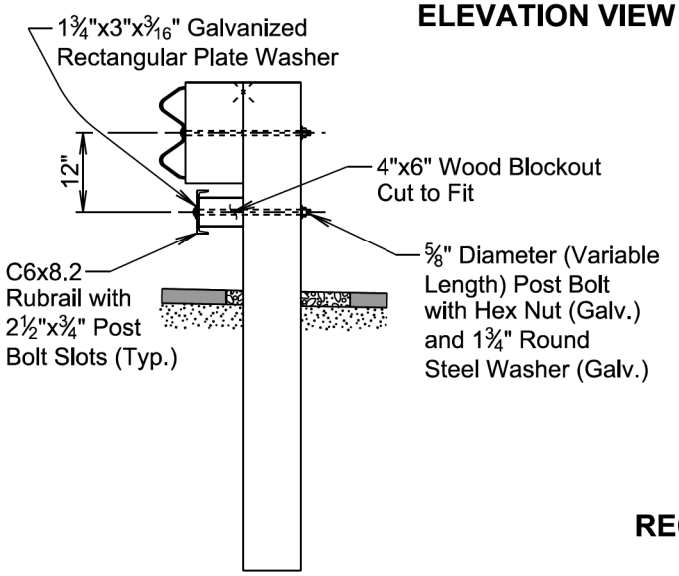

VIEW G-G
(For Bridge Rail Class B Design 1T or 2T)

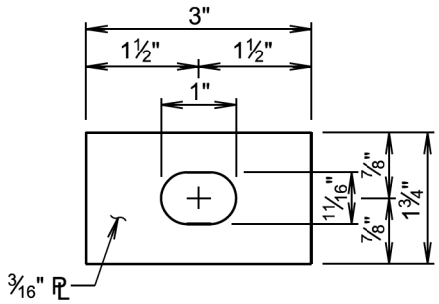

RECTANGULAR PLATE WASHER

September 14, 2019

Published Date: 3rd Qtr. 2022	SDDOT	TYPE 12 GUARDRAIL TRANSITION (W BEAM BRIDGE RAIL CLASS B DESIGN 1T OR 2T TO W BEAM GUARDRAIL)	PLATE NUMBER 630.63 Sheet 2 of 3

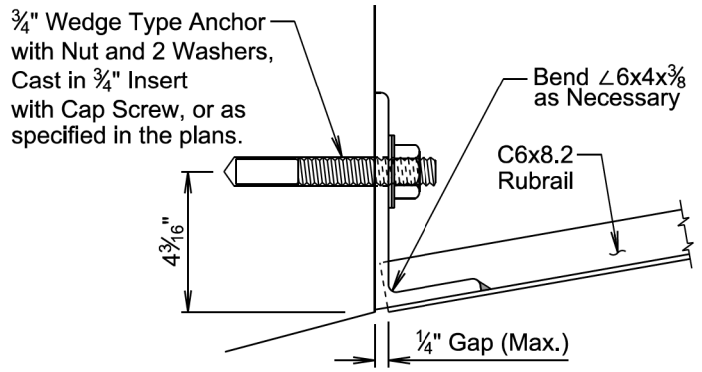

DETAIL K
(Double Class B Rail Not Shown)
(For Bridge Rail Class B Design 1T or 2T)

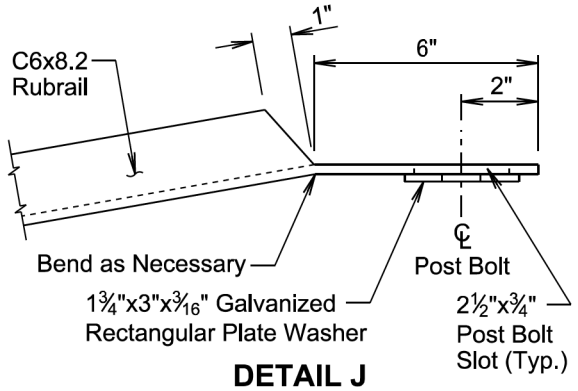

DETAIL J
(Post, Blockout, Post Bolt, and Rail Not Shown)
(For Bridge Rail Class B Design 1T or 2T)

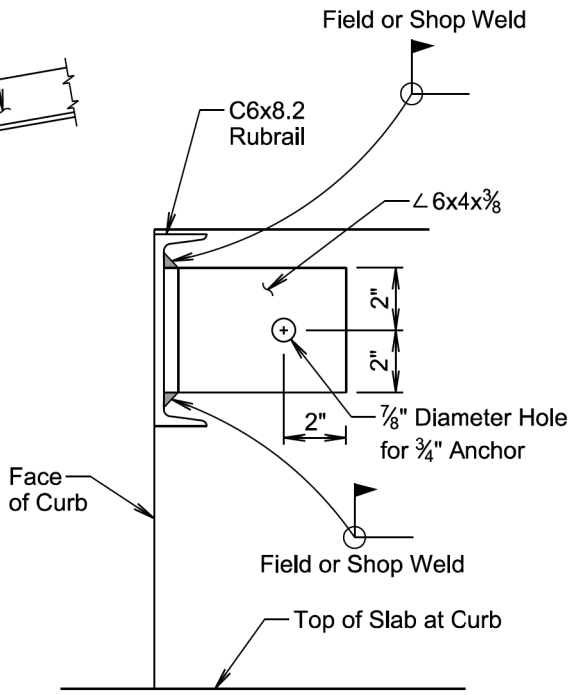

VIEW H-H
(Anchor and Rail Not Shown)
(For Bridge Rail Class B Design 1T or 2T)

GENERAL NOTES:

Throughout the type 12 guardrail transition, slots in the rails will be provided as specified in the plans and by the manufacturer. A drilled hole through the rail is not allowed as a replacement for a slot. If the Contractor must create a slot, a cutting torch or plasma cutter is not allowed. The slot edges will be smooth and free of burrs or notches.

The rubrail steel will be in conformance with ASTM A36 and will be galvanized after fabrication in conformance with ASTM A123. If pre-galvanized steel members are used, all cuts and welds will be coated with an approved galvanizing paint.

The wedge type anchor bolt, nut, and washers will be hot dipped galvanized or made of a corrosion resistent material. The wedge type anchor will be capable of sustaining an ultimate load in tension or shear of 17,000 pounds when the anchor is set in 4,500 psi compressive strength concrete. The anchor will be installed according to the manufacturer's recommendations. The Contractor will obtain certification from the manufacturer that the anchor meets the tensile and shear requirements and will submit the certification to the Engineer. The cost for furnishing and installing the wedge type anchor, nut, and washers will be incidental to the contract unit price per foot for "Rubrail".

All costs for furnishing and installing the straight double class B W beam guardrail including labor, equipment, and materials including the W beam rails, posts, blockouts, W beam terminal connector, and hardware will be incidental to the contract unit price per foot for "Straight Double Class B W Beam Guardrail with Wood Posts".

All costs for furnishing and installing the type 12 guardrail transition including labor, equipment, and materials will be included in the contract unit price for the respective guardrail contract items.

September 14, 2019

Published Date: 3rd Qtr. 2022	SDDOT	TYPE 12 GUARDRAIL TRANSITION (W BEAM BRIDGE RAIL CLASS B DESIGN 1T OR 2T TO W BEAM GUARDRAIL)	PLATE NUMBER 630.63 Sheet 3 of 3

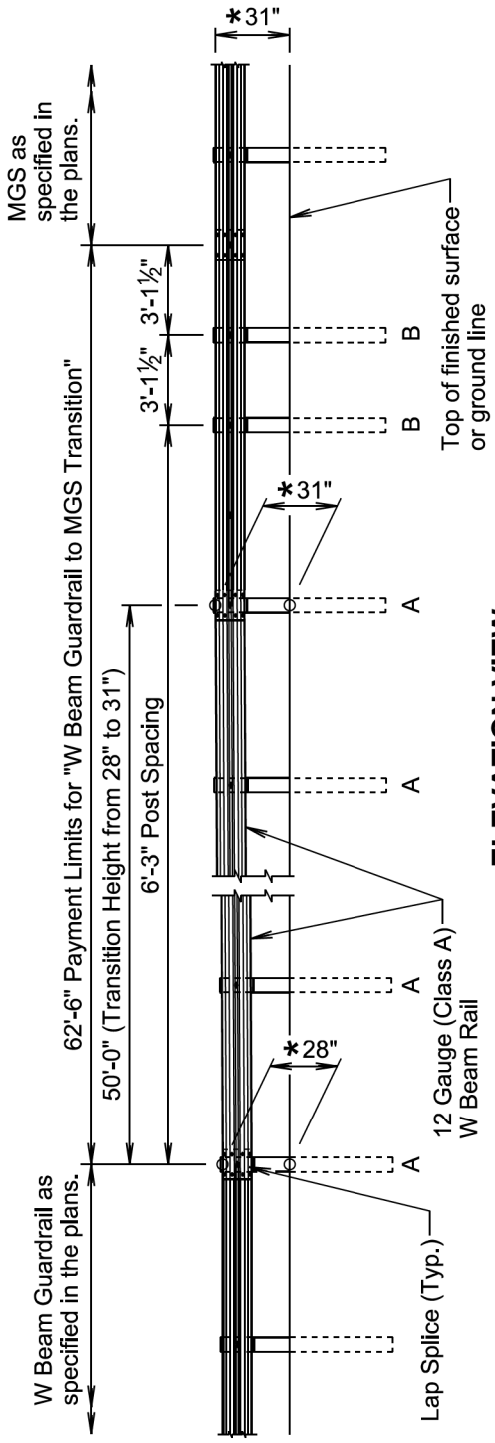

ELEVATION VIEW

A: 6"x8"x 6'-0" Wood Post and 6"x8"x14" Wood Blockout (See standard plate 630.10)
B: 6"x8"x 6'-0" Wood Post and 6"x12"x14" Wood Blockout (See standard plate 630.20)

* See standard plate 630.99

GENERAL NOTES:

All costs for furnishing and installing the W beam guardrail to MGS transition including labor, equipment, and materials which includes all rail sections, posts and blockouts, hardware, and incidentals will be included in the contract unit price per each for "W Beam Guardrail to MGS Transition".

September 14, 2019

Published Date: 3rd Qtr. 2022	SDDOT	W BEAM GUARDRAIL TO MGS (MIDWEST GUARDRAIL SYSTEM) TRANSITION	PLATE NUMBER 630.64 Sheet 1 of 1

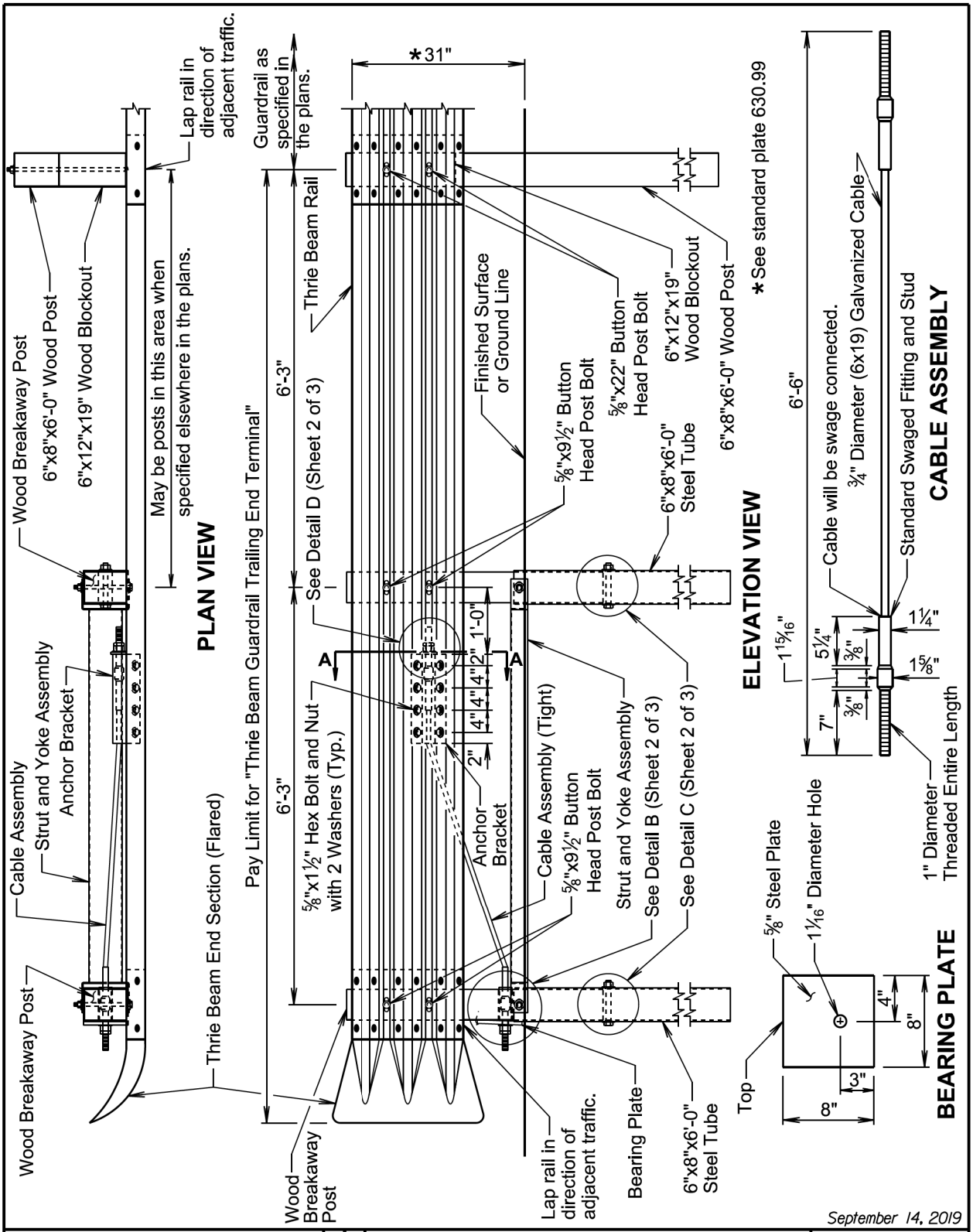

Published Date: 3rd Qtr. 2022

SDDOT

THRIE BEAM GUARDRAIL TRAILING END TERMINAL

PLATE NUMBER 630.80

Sheet 1 of 3

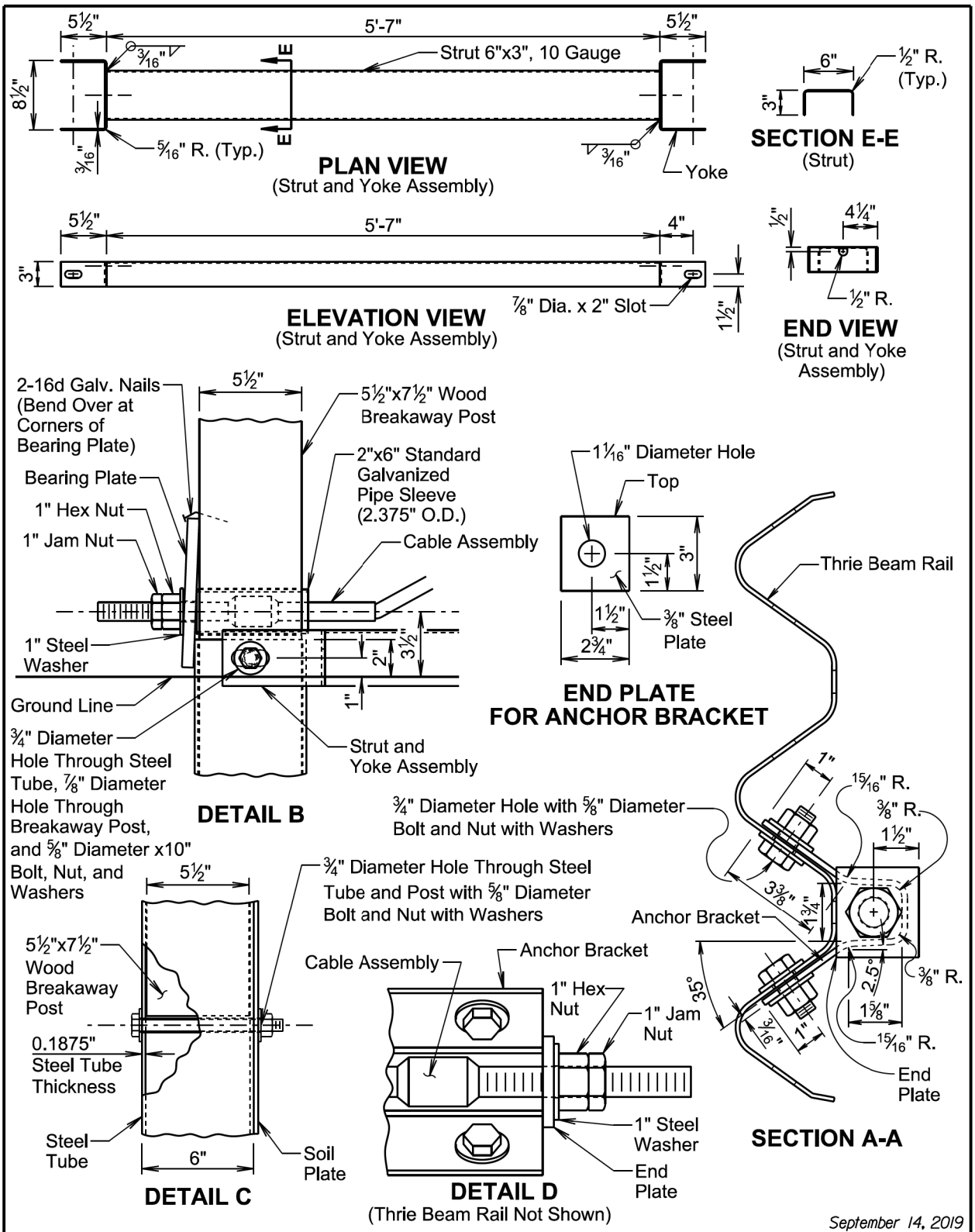

Published Date: 3rd Qtr. 2022	SDDOT	THRIE BEAM GUARDRAIL TRAILING END TERMINAL	PLATE NUMBER 630.80 Sheet 2 of 3

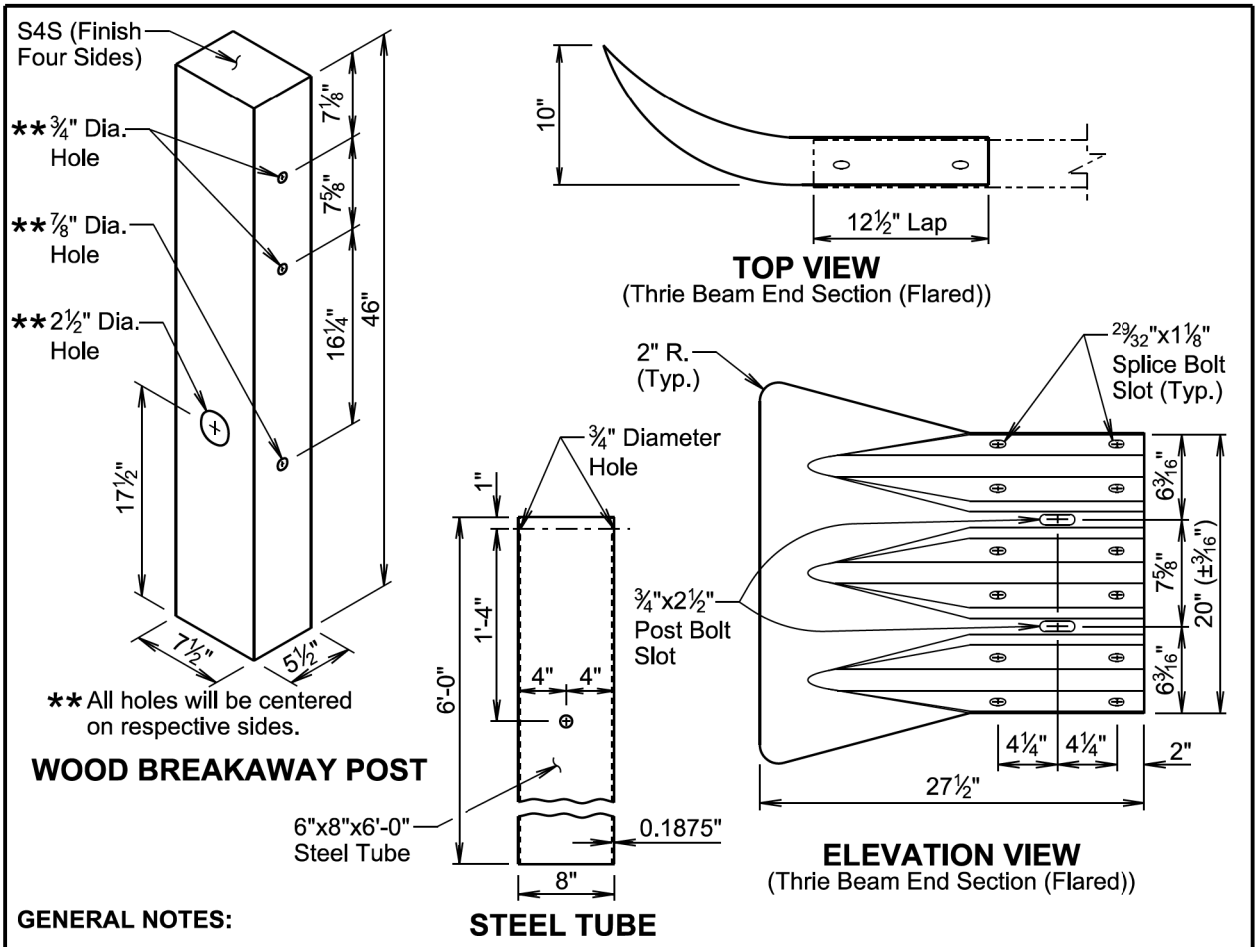

GENERAL NOTES:

The thrie beam guardrail trailing end terminal will only be used in a one-way traffic situation on the downstream traffic flow end.

Thrie beam end sections (flared) will be 12 gauge.

The cable will be ¾", Type II, with Class A coating in conformance with AASHTO M30.

The steel tube will meet the requirements of ASTM A500, Grade B, and will be galvanized after fabrication in accordance with the requirements of AASHTO M111.

All hardware will be galvanized in accordance with ASTM A153.

The anchor bracket, soil plate, and bearing plate will be fabricated from steel that meets ASTM A36 Specifications. They will be galvanized after fabrication in accordance with ASTM A123.

Slots in the rails will be provided as specified in the plans and by the manufacturer. A drilled hole through the rail is not allowed as a replacement for a slot. If the Contractor must create a slot, a cutting torch or plasma cutter is not allowed. The slot edges will be smooth and free of burrs or notches.

All costs for furnishing and constructing the thrie beam guardrail trailing end terminal including labor, equipment, materials which includes thrie beam rail section, all posts and blockouts, wood breakaway posts, steel tubes, cable assembly, bearing plate, anchor bracket, strut and yoke assembly, thrie beam end section (flared), hardware, and incidentals will be included in the contract unit price per each for "Thrie Beam Guardrail Trailing End Terminal".

September 14, 2019

Published Date: 3rd Qtr. 2022	SDDOT	*THRIE BEAM GUARDRAIL TRAILING END TERMINAL*	*PLATE NUMBER* 630.80 *Sheet 3 of 3*

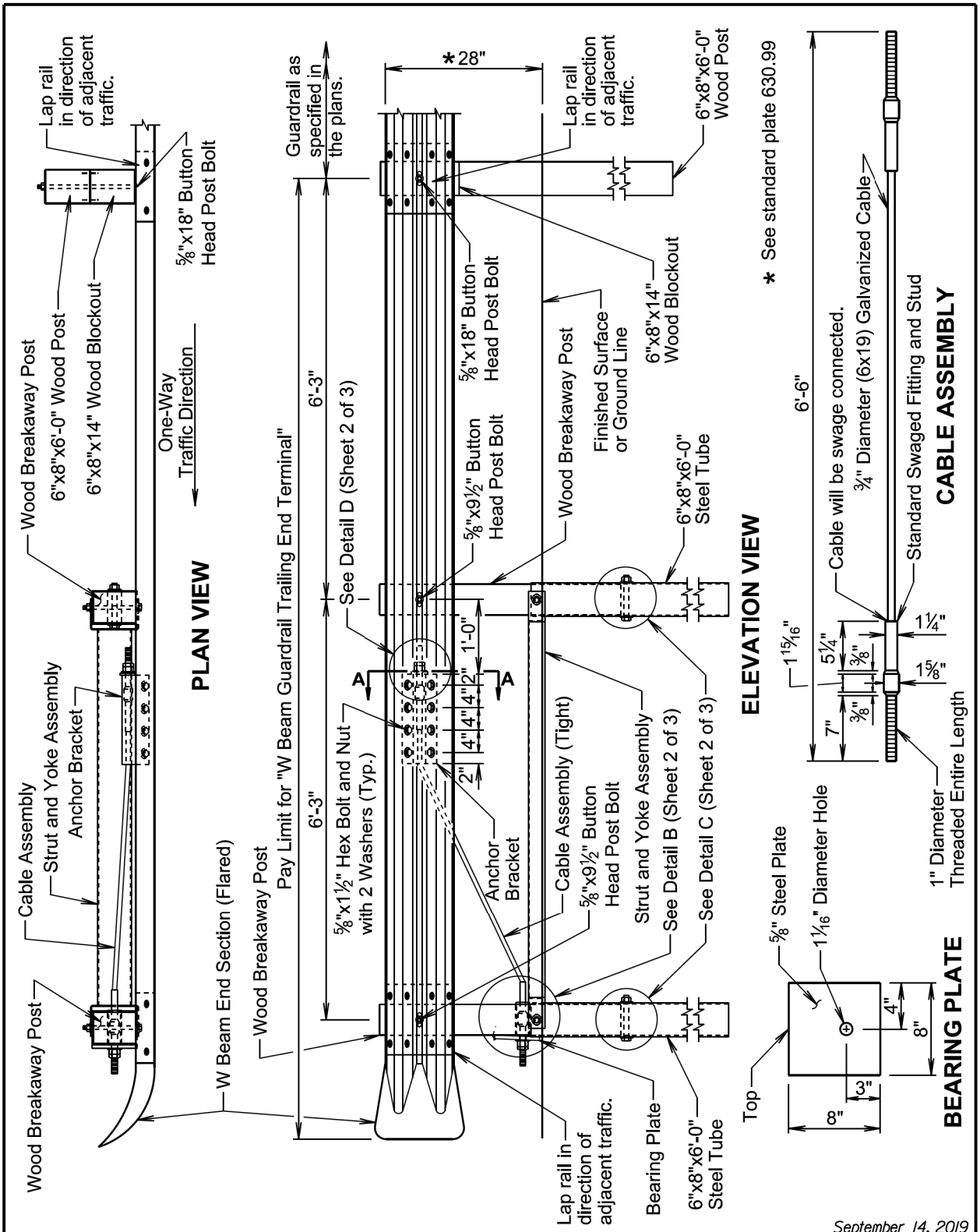

Published Date: 3rd Qtr. 2022	SDDOT	W BEAM GUARDRAIL TRAILING END TERMINAL	PLATE NUMBER 630.81 Sheet 1 of 3

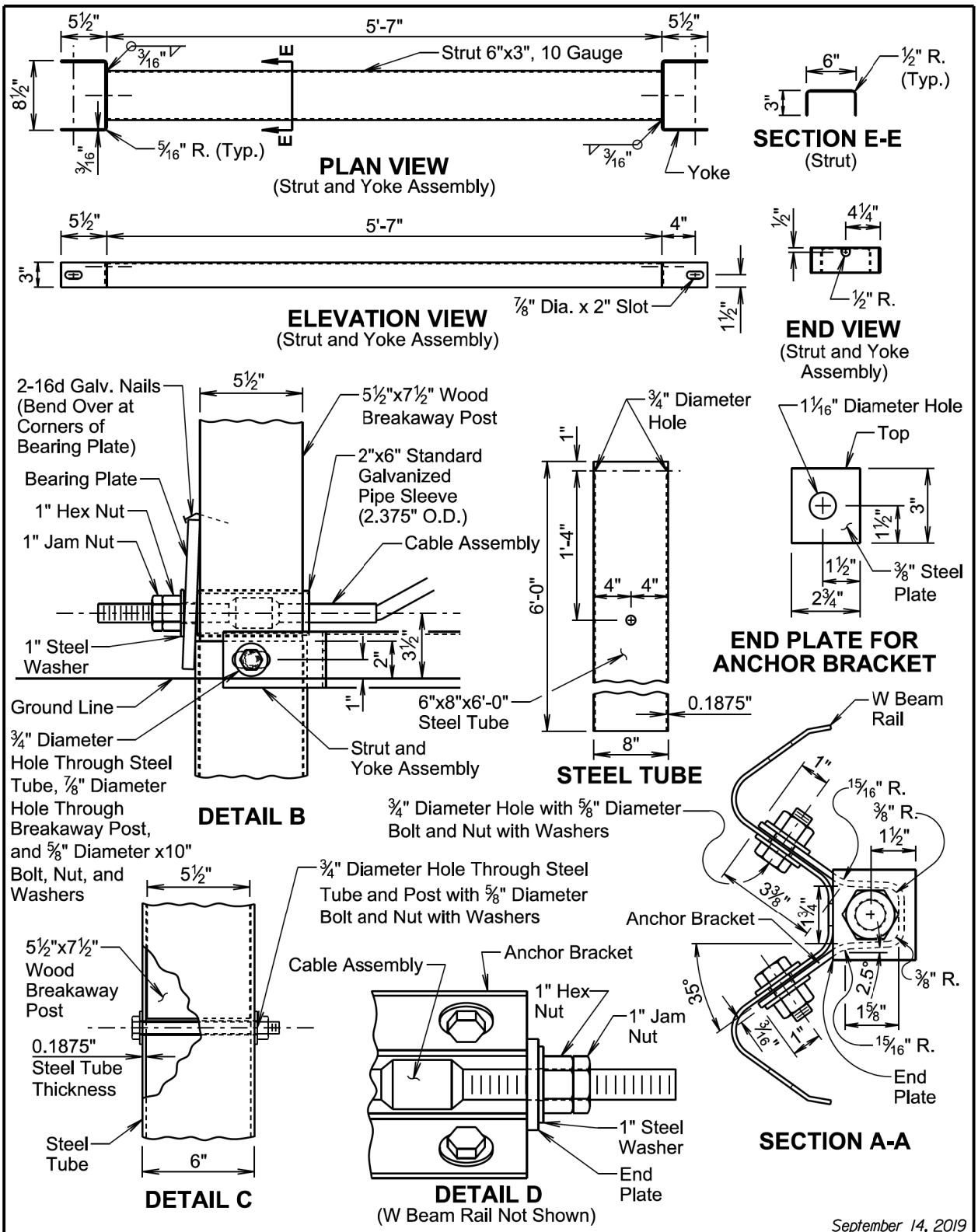
5½"
5'-7"
5½"
3/16"
Strut 6"x3", 10 Gauge
E
E
8½"
3/16"
5/16" R. (Typ.)
3/16"
Yoke
PLAN VIEW
(Strut and Yoke Assembly)
6"
½" R. (Typ.)
3"
SECTION E-E
(Strut)
5½"
5'-7"
4"
3"
7/8" Dia. x 2" Slot
1½"
ELEVATION VIEW
(Strut and Yoke Assembly)
½"
4¼"
½" R.
END VIEW
(Strut and Yoke Assembly)
2-16d Galv. Nails (Bend Over at Corners of Bearing Plate)
5½"
5½"x7½" Wood Breakaway Post
2"x6" Standard Galvanized Pipe Sleeve (2.375" O.D.)
Bearing Plate
1" Hex Nut
1" Jam Nut
Cable Assembly
1" Steel Washer
2"
3½"
1"
Ground Line
¾" Diameter Hole Through Steel Tube, 7/8" Diameter Hole Through Breakaway Post, and 5/8" Diameter x10" Bolt, Nut, and Washers
Strut and Yoke Assembly
DETAIL B
¾" Diameter Hole
1"
1'-4"
6'-0"
4"
4"
6"x8"x6'-0" Steel Tube
0.1875"
8"
STEEL TUBE
1 1/16" Diameter Hole
Top
3"
1½"
1½"
2¾"
⅜" Steel Plate
END PLATE FOR ANCHOR BRACKET
W Beam Rail
1"
15/16" R.
⅜" R.
1½"
¾" Diameter Hole with 5/8" Diameter Bolt and Nut with Washers
3⅜"
1¾"
Anchor Bracket
35°
2.5°
⅜" R.
1⅝"
15/16"
1"
15/16" R.
End Plate
SECTION A-A
¾" Diameter Hole Through Steel Tube and Post with 5/8" Diameter Bolt and Nut with Washers
5½"
5½"x7½" Wood Breakaway Post
0.1875" Steel Tube Thickness
Steel Tube
6"
DETAIL C
Cable Assembly
Anchor Bracket
1" Hex Nut
1" Jam Nut
1" Steel Washer
End Plate
DETAIL D
(W Beam Rail Not Shown)
September 14, 2019
Published Date: 3rd Qtr. 2022
SDDOT
W BEAM GUARDRAIL
TRAILING END TERMINAL
PLATE NUMBER
630.81
Sheet 2 of 3

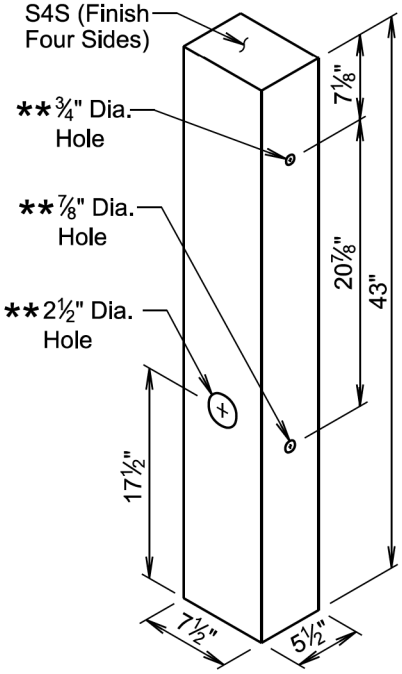

** All holes will be centered on respective sides.

WOOD BREAKAWAY POST

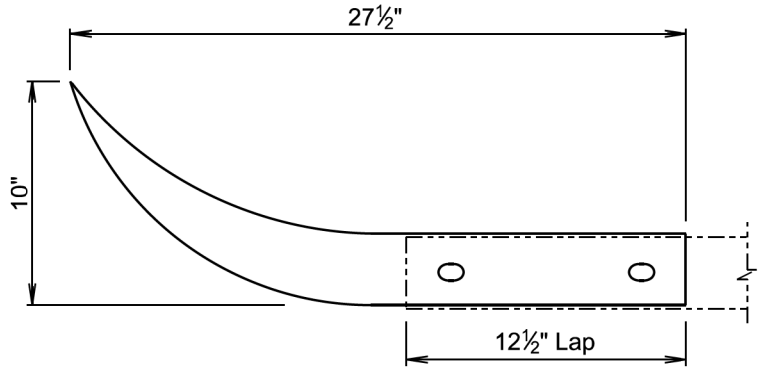

PLAN VIEW
(W Beam End Section (Flared))

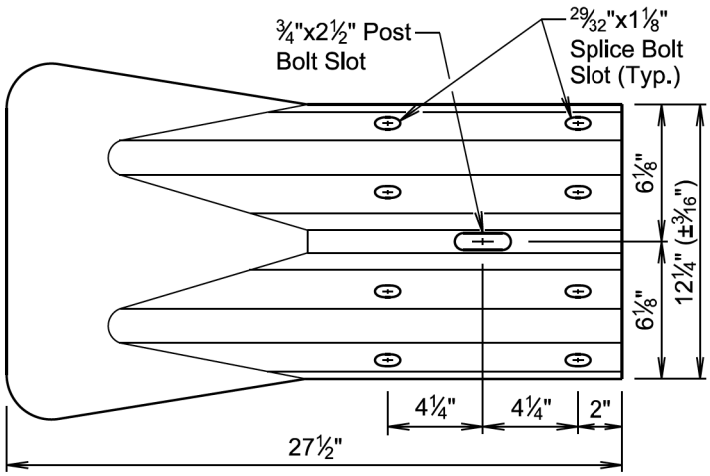

ELEVATION VIEW
(W Beam End Section (Flared))

GENERAL NOTES:

The W beam guardrail trailing end terminal will only be used in a one-way traffic situation on the downstream traffic flow end.

W beam end section (flared) will be 12 gauge.

The cable will be ¾", Type II, with Class A coating in conformance with AASHTO M30.

The steel tube will meet the requirements of ASTM A500, Grade B, and will be galvanized after fabrication in accordance with the requirements of AASHTO M111.

All hardware will be galvanized in accordance with ASTM A153.

The anchor bracket, strut and yoke assembly, and bearing plate will be fabricated from steel that meets ASTM A36 Specifications. They will be galvanized after fabrication in accordance with ASTM A123.

Slots in the rails will be provided as specified in the plans and by the manufacturer. A drilled hole through the rail is not allowed as a replacement for a slot. If the Contractor must create a slot, a cutting torch or plasma cutter is not allowed. The slot edges will be smooth and free of burrs or notches.

All costs for furnishing and constructing the W beam guardrail trailing end terminal including labor, equipment, materials which includes W beam rail section, two wood breakaway posts, steel tubes, strut and yoke assembly, cable assembly, bearing plate, anchor bracket, W beam end section (flared), one wood post and blockout, hardware, and incidentals will be included in the contract unit price per each for "W Beam Guardrail Trailing End Terminal".

September 14, 2019

Published Date: 3rd Qtr. 2022	SDDOT	*W BEAM GUARDRAIL TRAILING END TERMINAL*	*PLATE NUMBER* 630.81 *Sheet 3 of 3*

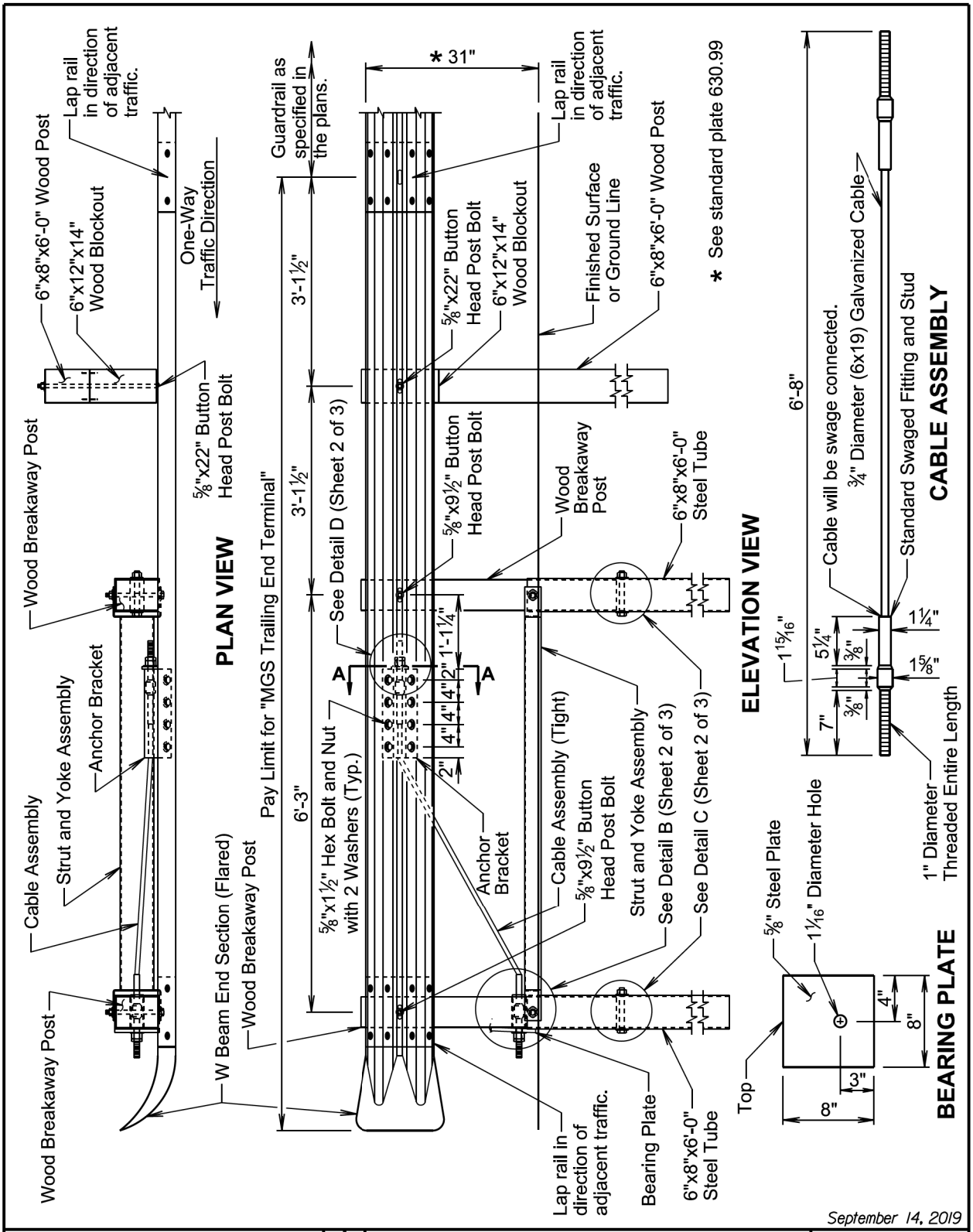
PLAN VIEW
ELEVATION VIEW
CABLE ASSEMBLY
BEARING PLATE
Wood Breakaway Post
Cable Assembly
Strut and Yoke Assembly
Anchor Bracket
6"x8"x6'-0" Wood Post
6"x12"x14" Wood Blockout
Lap rail in direction of adjacent traffic.
One-Way Traffic Direction
⅝"x22" Button Head Post Bolt
W Beam End Section (Flared)
Wood Breakaway Post
Pay Limit for "MGS Trailing End Terminal"
6'-3"
3'-1½"
3'-1½"
⅝"x1½" Hex Bolt and Nut with 2 Washers (Typ.)
Guardrail as specified in the plans.
See Detail D (Sheet 2 of 3)
* 31"
⅝"x9½" Button Head Post Bolt
Anchor Bracket
Cable Assembly (Tight)
Strut and Yoke Assembly
See Detail B (Sheet 2 of 3)
See Detail C (Sheet 2 of 3)
Wood Breakaway Post
6"x8"x6'-0" Steel Tube
Finished Surface or Ground Line
* See standard plate 630.99
Lap rail in direction of adjacent traffic.
Bearing Plate
6'-8"
Cable will be swage connected.
¾" Diameter (6x19) Galvanized Cable
Standard Swaged Fitting and Stud
1" Diameter Threaded Entire Length
⅝" Steel Plate
1 1/16" Diameter Hole
Top
8"
3"
4"
8"
September 14, 2019
Published Date: 3rd Qtr. 2022
SDDOT
MIDWEST GUARDRAIL SYSTEM (MGS) TRAILING END TERMINAL
PLATE NUMBER
630.82
Sheet 1 of 3

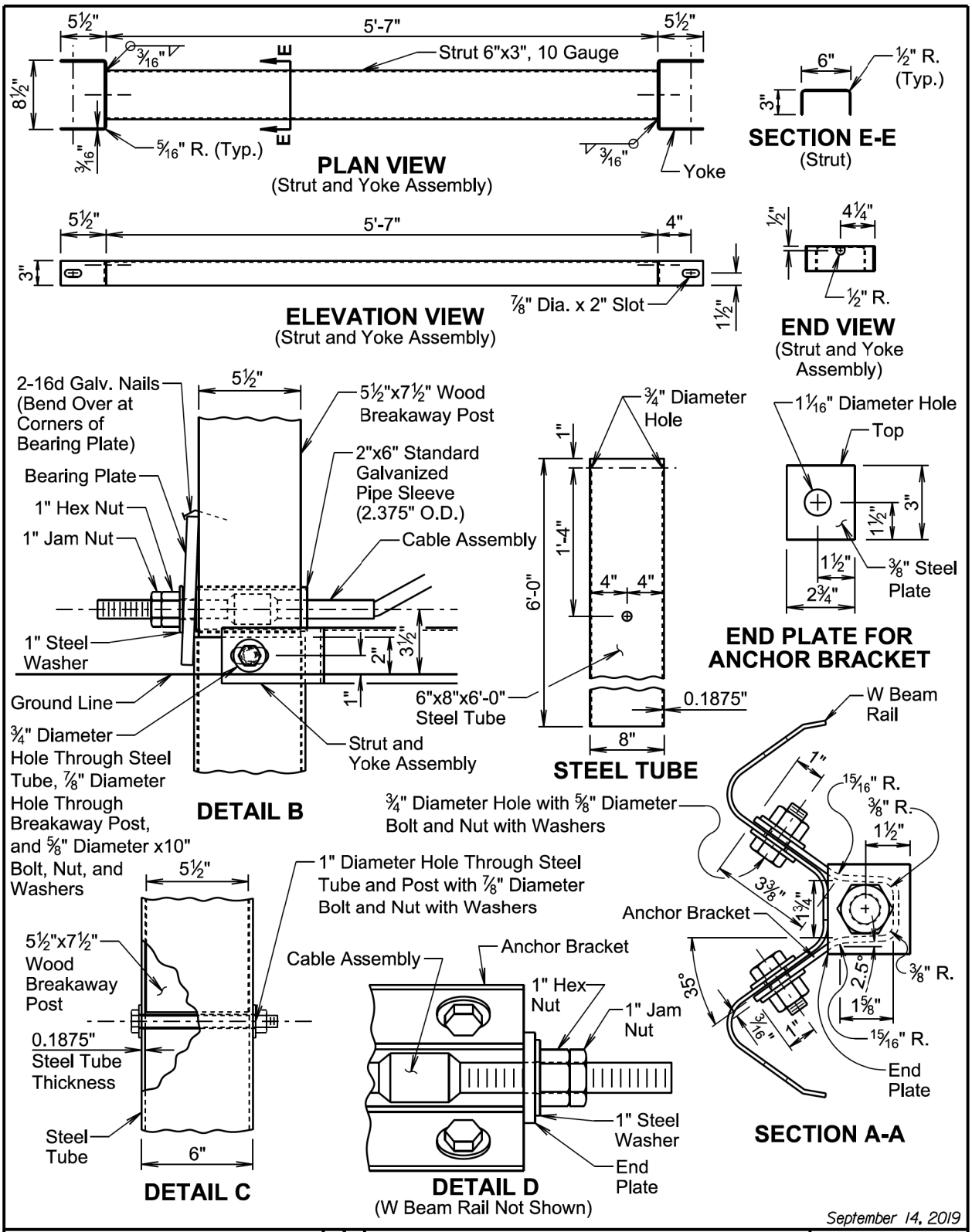

Published Date: 3rd Qtr. 2022	SDDOT	MIDWEST GUARDRAIL SYSTEM (MGS) TRAILING END TERMINAL	PLATE NUMBER 630.82 Sheet 2 of 3

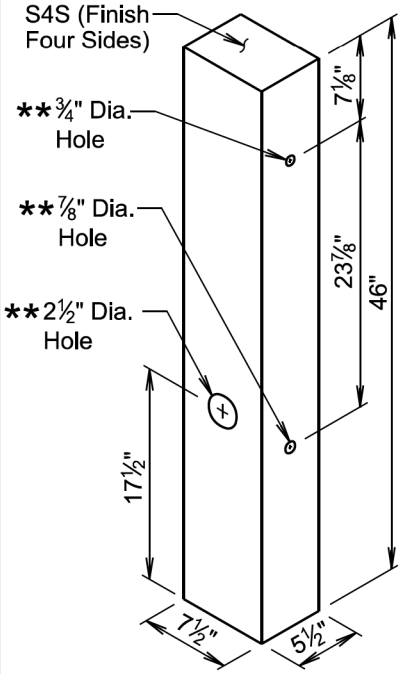

** All holes will be centered on respective sides.

WOOD BREAKAWAY POST

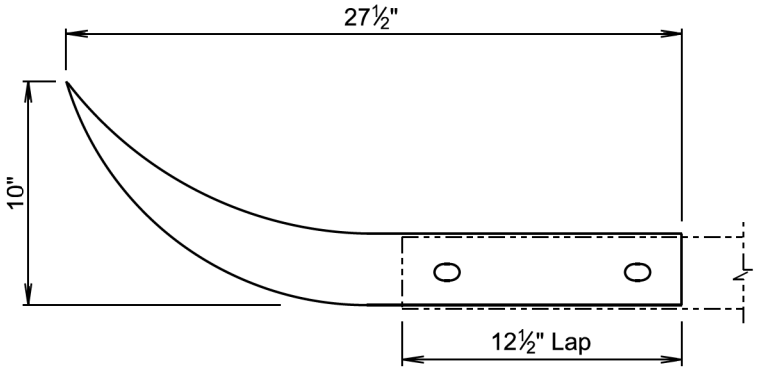

PLAN VIEW
(W Beam End Section (Flared))

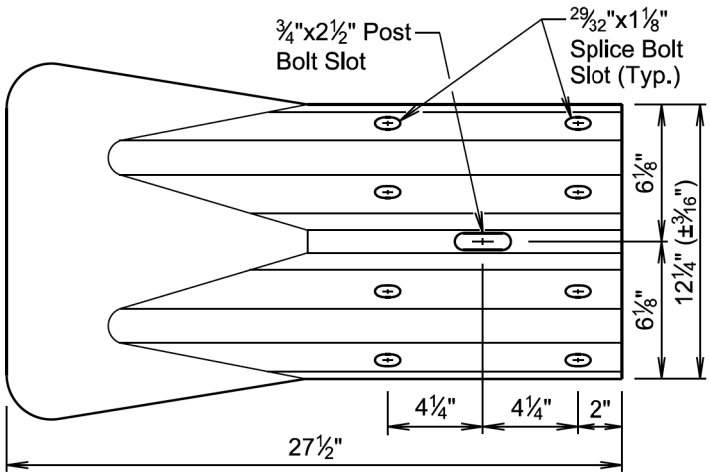

ELEVATION VIEW
(W Beam End Section (Flared))

GENERAL NOTES:

The MGS trailing end terminal will only be used in a one-way traffic situation on the downstream traffic flow end.

W beam end section (flared) will be 12 gauge.

The cable will be ¾", Type II, with Class A coating in conformance with AASHTO M30.

The steel tube will meet the requirements of ASTM A500, Grade B, and will be galvanized after fabrication in accordance with the requirements of AASHTO M111.

All hardware will be galvanized in accordance with ASTM A153.

The anchor bracket, strut and yoke assembly, and bearing plate will be fabricated from steel that meets ASTM A36 Specifications. They will be galvanized after fabrication in accordance with ASTM A123.

Slots in the rails will be provided as specified in the plans and by the manufacturer. A drilled hole through the rail is not allowed as a replacement for a slot. If the Contractor must create a slot, a cutting torch or plasma cutter is not allowed. The slot edges will be smooth and free of burrs or notches.

All costs for furnishing and constructing the MGS trailing end terminal including labor, equipment, materials which includes W beam rail section, two wood breakaway posts, steel tubes, strut and yoke assembly, cable assembly, bearing plate, anchor bracket, W beam end section (flared), one MGS wood post and blockout, hardware, and incidentals will be included in the contract unit price per each for "MGS Trailing End Terminal".

September 14, 2019

Published Date: 3rd Qtr. 2022	SDDOT	MIDWEST GUARDRAIL SYSTEM (MGS) TRAILING END TERMINAL	PLATE NUMBER 630.82 Sheet 3 of 3

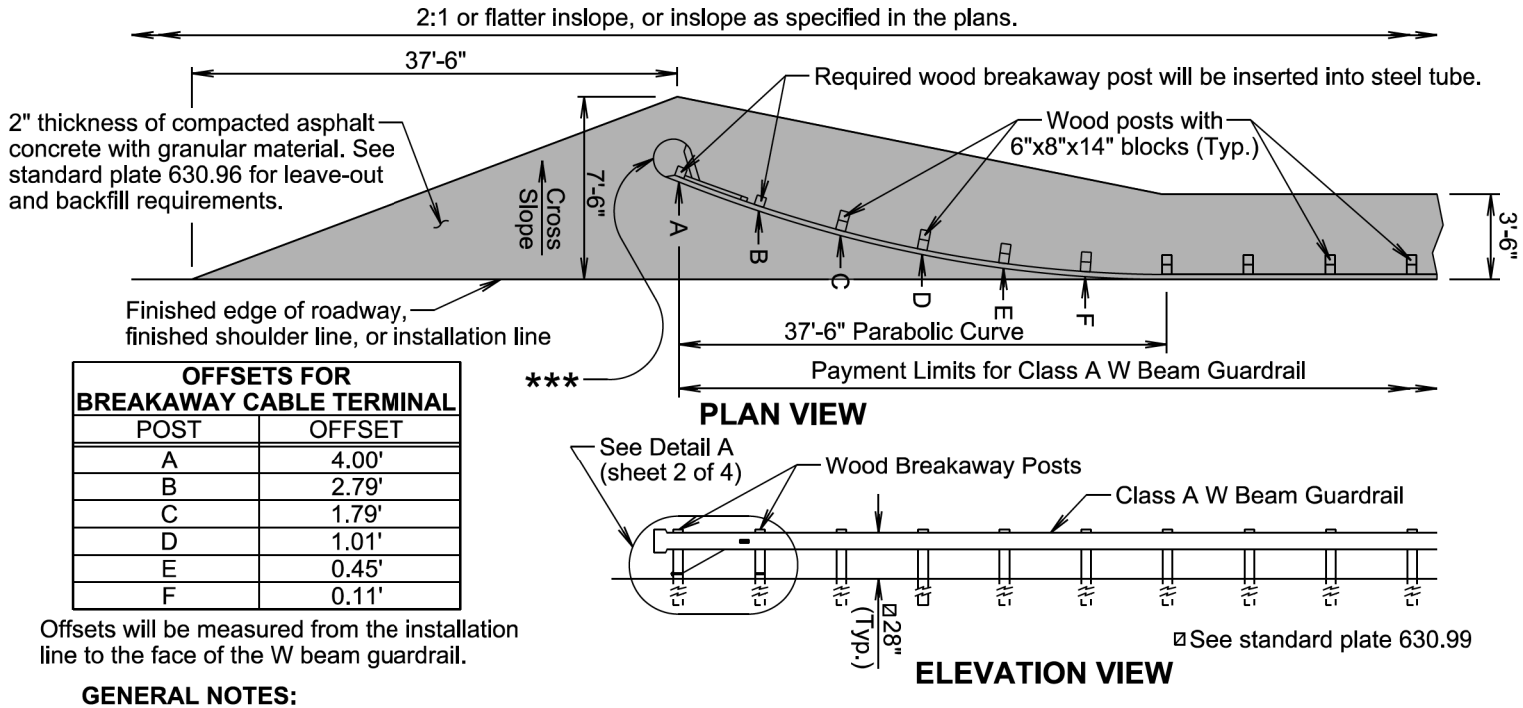

OFFSETS FOR BREAKAWAY CABLE TERMINAL	
POST	OFFSET
A	4.00'
B	2.79'
C	1.79'
D	1.01'
E	0.45'
F	0.11'

Offsets will be measured from the installation line to the face of the W beam guardrail.

GENERAL NOTES:

The finished embankment surfacing cross slope will match the roadway cross slope; however, if a steeper cross slope is necessary the steepest allowable cross slope is 10:1.

Asphalt concrete will be the same type used elsewhere on the project or will be as specified in the plans. If asphalt concrete is not specified in the plans, the asphalt concrete will conform to the Specifications for "Asphalt Concrete Composite."

Granular material will be the same type used elsewhere on the project or will be as specified in the plans. If granular material type is not specified in the plans, the material will conform to the Specifications for "Base Course". The granular material will be placed the same thickness as the mainline surfacing or as specified in the plans.

*** An adhesive object marker will be placed on the end section buffer after placement of the end section buffer. The adhesive object marker dimensions may be 16"x16" or other variation due to the shape of the end section buffer. A minimum of 256 square inches of object marker reflective sheeting area is required. The reflective sheeting will be fluorescent yellow super or very high intensity. All costs for furnishing and installing the adhesive object marker will be incidental to various contract items.

Costs for constructing the W Beam Guardrail Breakaway Cable Terminal including labor, equipment, and materials including the anchor bracket, cable assembly, steel tubes, soil plates, bearing plate, pipe sleeve, W beam end section(buffer), modified W beam terminal connector, and all necessary hardware will be incidental to the contract unit price per each for "W Beam Guardrail Breakaway Cable Terminal".

SDDOT

W BEAM GUARDRAIL
BREAKAWAY CABLE TERMINAL

PLATE NUMBER
630.85

September 14, 2019

Sheet 1 of 4

Published Date: 3rd Qtr. 2022

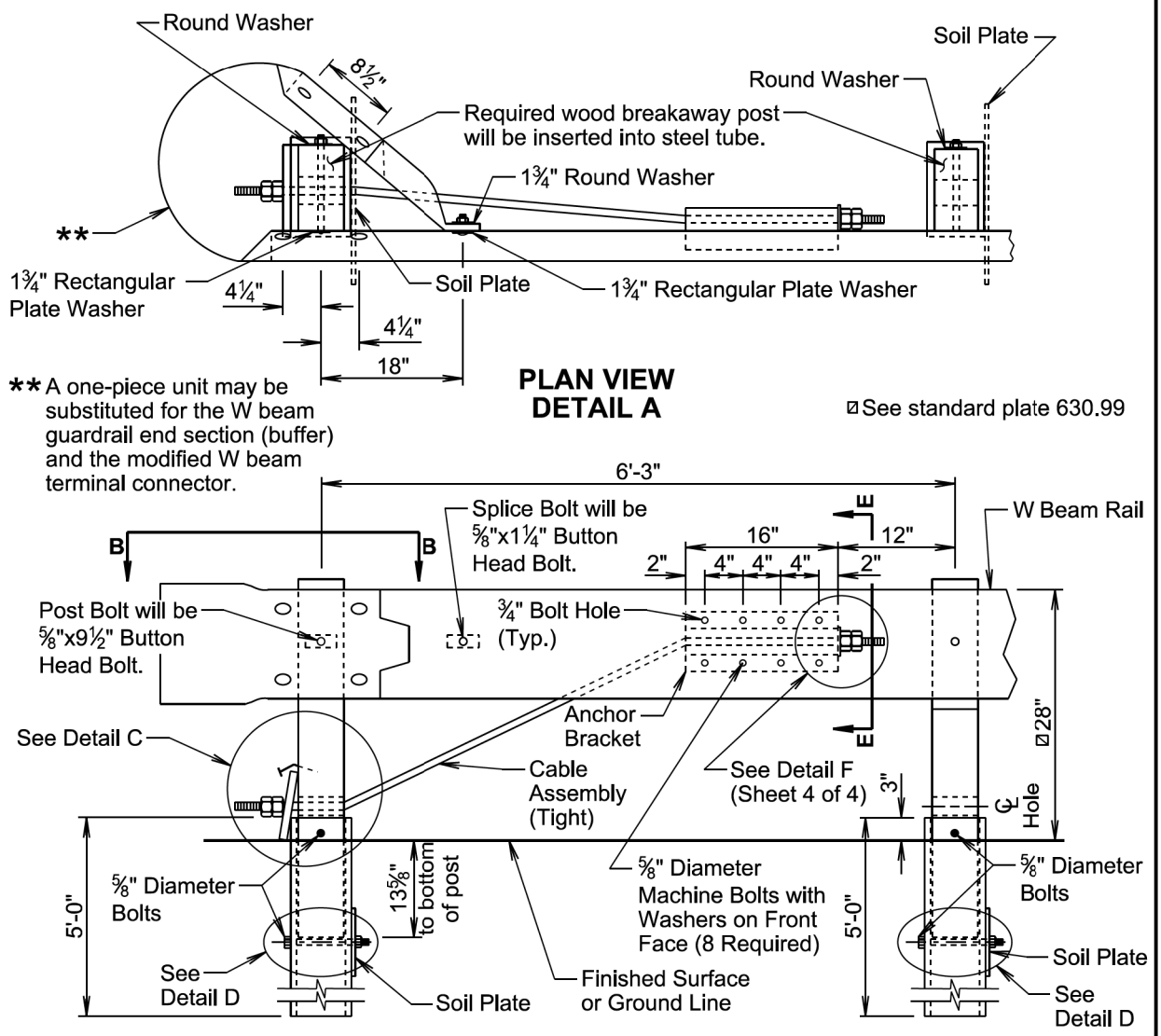

GENERAL NOTES:

All hardware will be galvanized in accordance with ASTM A153.

The steel tubes will meet the requirements of ASTM A500, Grade B, and will be galvanized after fabrication in accordance with the requirements of AASHTO M111.

The anchor bracket, soil plate, and bearing plate will be fabricated from steel that meets ASTM A36 Specifications. They will be galvanized after fabrication in accordance with ASTM A123.

The W Beam End Section (Buffer) will be 12 gage galvanized steel.

The cable will be ¾", Type II, with Class A coating in conformance with AASHTO M30.

September 14, 2019

Published Date: 3rd Qtr. 2022	SDDOT	W BEAM GUARDRAIL BREAKAWAY CABLE TERMINAL	PLATE NUMBER 630.85 Sheet 2 of 4

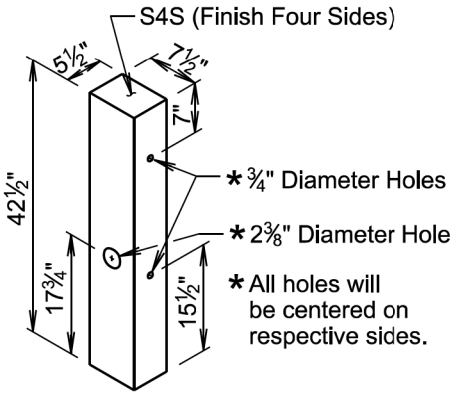

WOOD BREAKAWAY POST

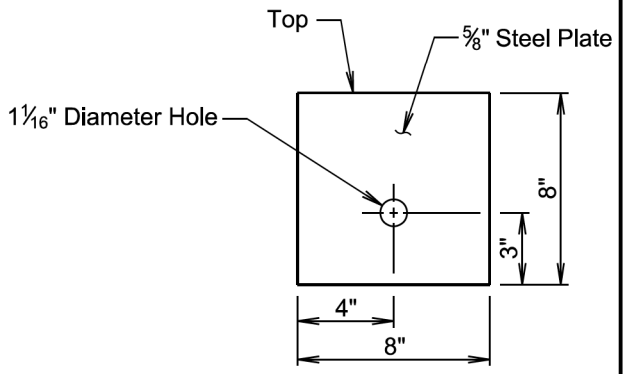

BEARING PLATE

** A one-piece unit may be substituted for the W beam guardrail end section (buffer) and the modified W beam terminal connector.

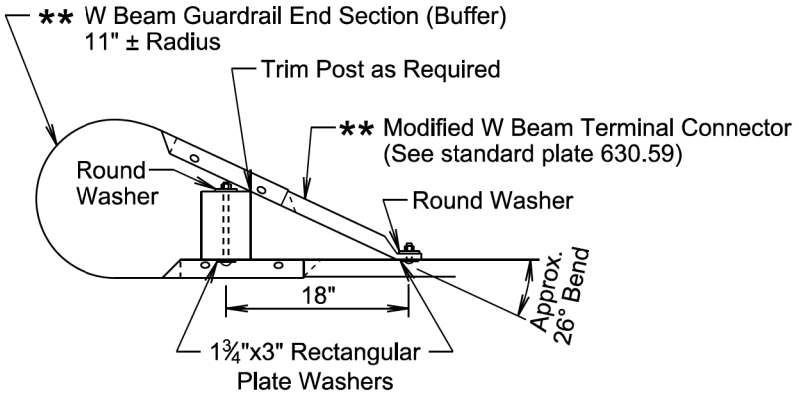

VIEW B-B

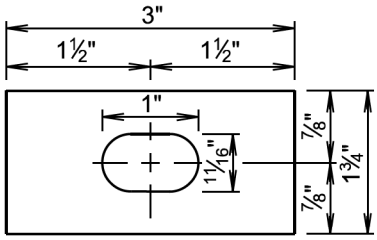

RECTANGULAR PLATE WASHER

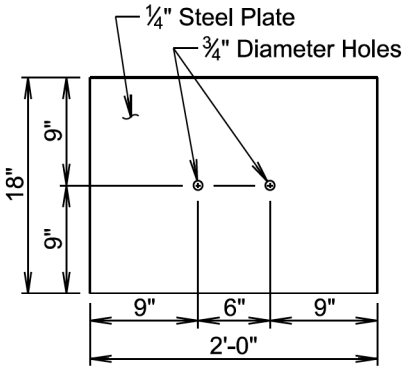

SOIL PLATE

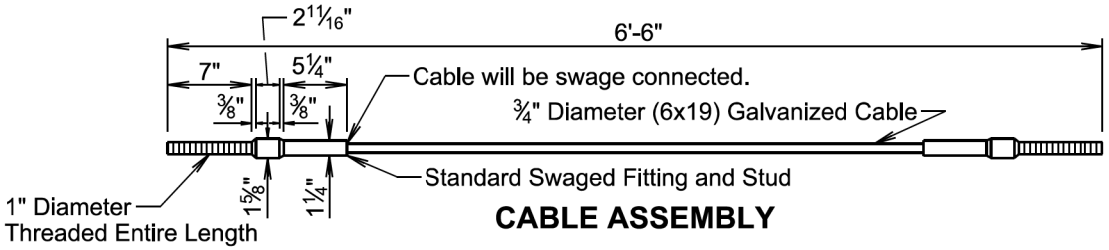

CABLE ASSEMBLY

September 14, 2019

Published Date: 3rd Qtr. 2022	SDDOT	W BEAM GUARDRAIL BREAKAWAY CABLE TERMINAL	PLATE NUMBER 630.85 Sheet 3 of 4

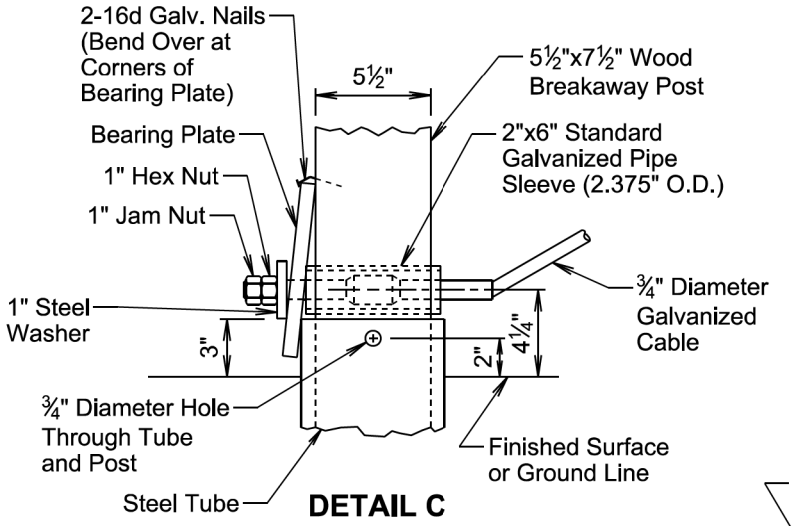

DETAIL C

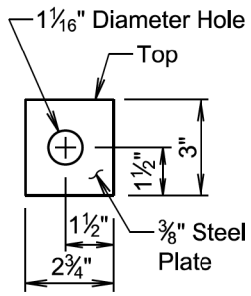

END PLATE FOR ANCHOR BRACKET

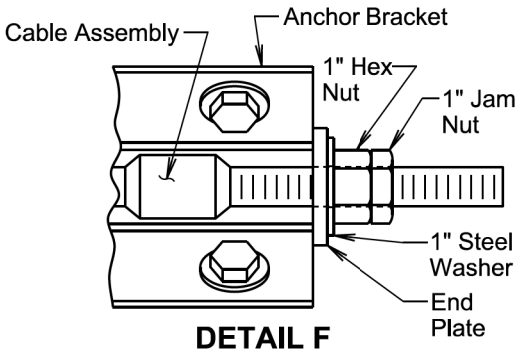

DETAIL F
(W Beam Rail Not Shown)

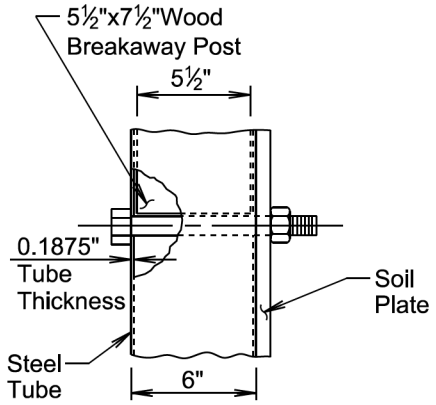

DETAIL D

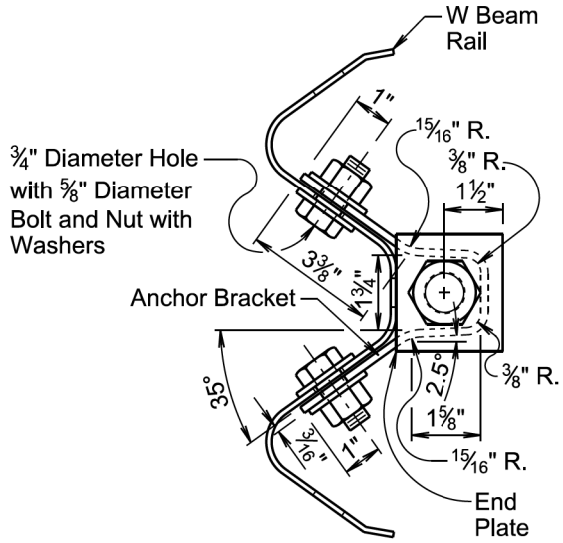

SECTION E-E

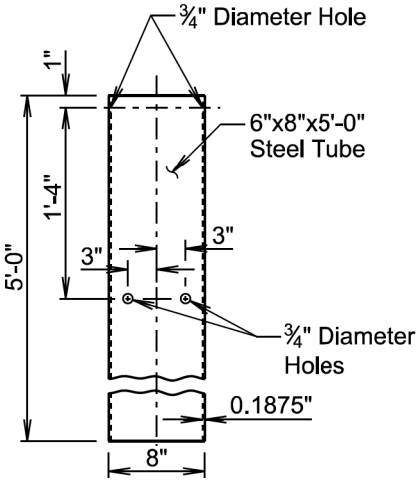

STEEL TUBE

September 14, 2019

Published Date: 3rd Qtr. 2022	SDDOT	W BEAM GUARDRAIL BREAKAWAY CABLE TERMINAL	PLATE NUMBER 630.85 Sheet 4 of 4

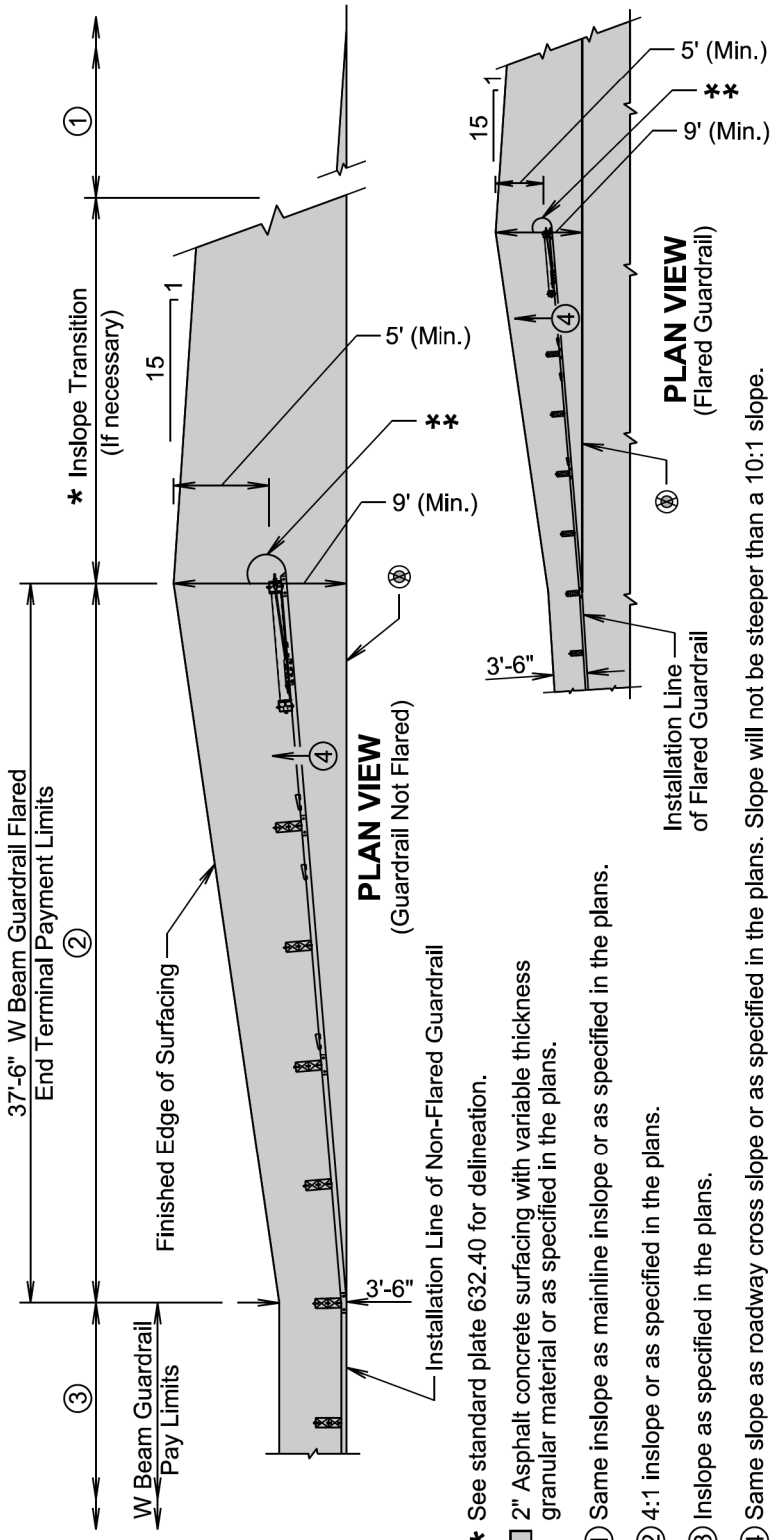

** See standard plate 632.40 for delineation.

▢ 2" Asphalt concrete surfacing with variable thickness granular material or as specified in the plans.

① Same inslope as mainline inslope or as specified in the plans.

② 4:1 inslope or as specified in the plans.

③ Inslope as specified in the plans.

④ Same slope as roadway cross slope or as specified in the plans. Slope will not be steeper than a 10:1 slope.

GENERAL NOTES:

The flared guardrail end terminals above are for illustrative purpose only.

* The length of inslope transition varies with the amount of change between inslopes. The length of the transition will change 100' for every whole number change in the inslope. For Example: If the inslope changes from a 5:1 to a 4:1 the length of the inslope transition would be 100'. If the inslope changes from a 6:1 to a 4:1 the length of the inslope transition would be 200'.

⊗ The installation reference line for flared guardrail end terminals will always be parallel to the roadway.

Asphalt concrete will be the same type used elsewhere on the project or will be as specified in the plans. If asphalt concrete is not specified in the plans, the asphalt concrete will conform to the Specifications for "Asphalt Concrete Composite."

Granular material will be the same type used elsewhere on the project or will be as specified in the plans. If granular material type is not specified in the plans, the material will conform to the Specifications for "Base Course". The granular material will be placed the same thickness as the mainline surfacing or as specified in the plans.

November 14, 2018

Published Date: 3rd Qtr. 2022

SDDOT

EMBANKMENT, SURFACING, AND PAYMENT LIMITS FOR W BEAM GUARDRAIL FLARED END TERMINAL

PLATE NUMBER
630.86

Sheet 1 of 1

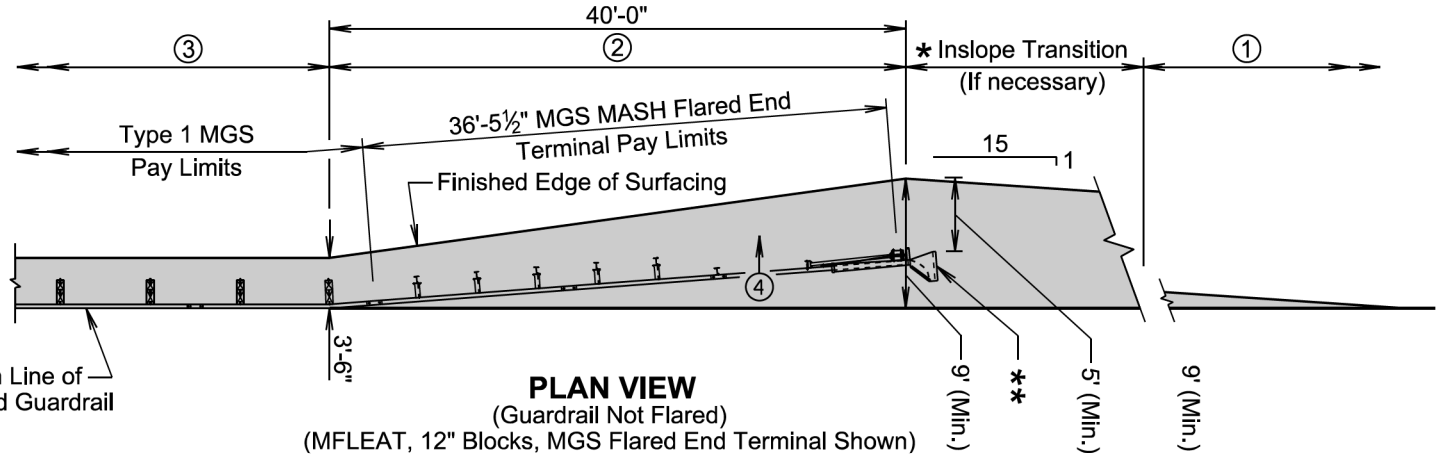

PLAN VIEW
(Guardrail Not Flared)
(MFLEAT, 12" Blocks, MGS Flared End Terminal Shown)

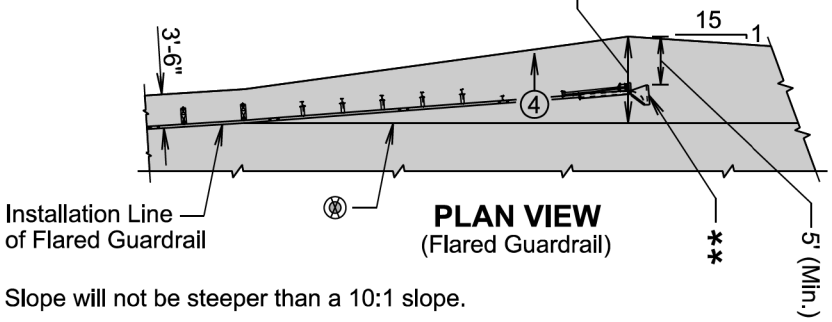

PLAN VIEW
(Flared Guardrail)

** See standard plate 632.40 for delineation.

▢ 2" Asphalt concrete surfacing with variable thickness granular material or as specified in the plans.

① Same inslope as mainline inslope or as specified in the plans.

② 4:1 inslope or as specified in the plans.

③ Inslope as specified in the plans.

④ Same slope as roadway cross slope or as specified in the plans. Slope will not be steeper than a 10:1 slope.

GENERAL NOTES:

The flared guardrail end terminals above are for illustrative purpose only.

* The length of inslope transition varies with the amount of change between inslopes. The length of the transition will change 100 feet for every whole number change in the inslope. For Example: If the inslope changes from a 5:1 to a 4:1 the length of the inslope transition would be 100 feet. If the inslope changes from a 6:1 to a 4:1 the length of the inslope transition would be 200 feet.

Ⓧ The installation reference line for flared guardrail end terminals will always be parallel to the roadway.

Asphalt concrete will be the same type used elsewhere on the project or will be as specified in the plans. If asphalt concrete is not specified in the plans, the asphalt concrete will conform to the Specifications for "Asphalt Concrete Composite."

Granular material will be the same type used elsewhere on the project or will be as specified in the plans. If granular material type is not specified in the plans, the material will conform to the Specifications for "Base Course". The granular material will be placed the same thickness as the mainline surfacing or as specified in the plans.

June 26, 2019

SDDOT

EMBANKMENT, SURFACING, AND PAYMENT LIMITS FOR MGS MASH FLARED END TERMINAL

PLATE NUMBER 630.87

Sheet 1 of 1

Published Date: 3rd Qtr. 2022

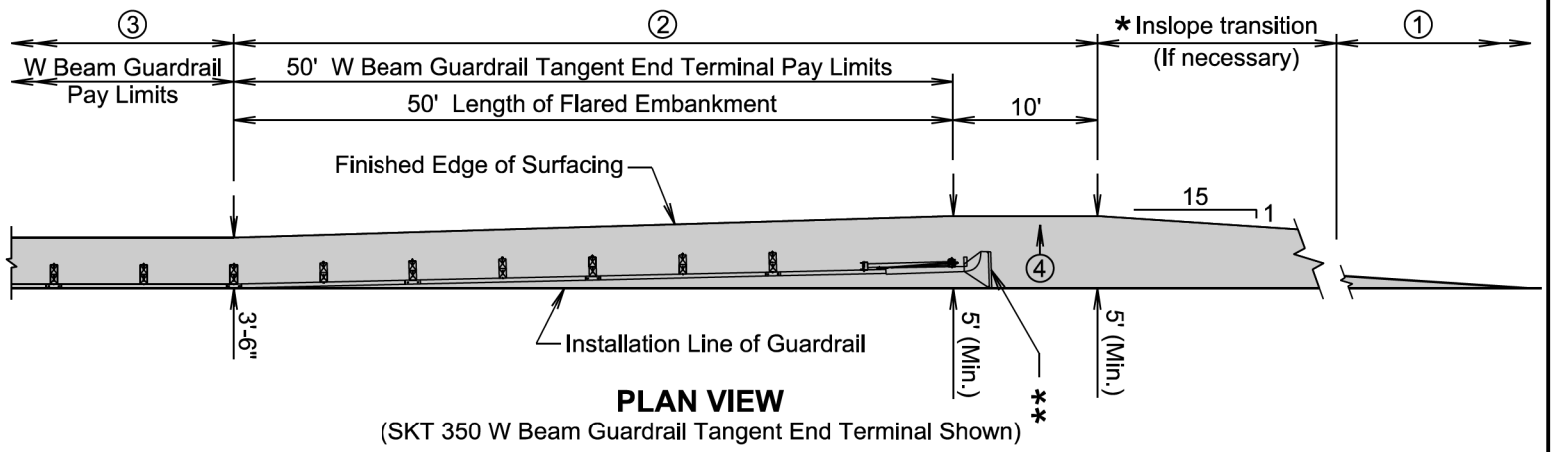

PLAN VIEW
(SKT 350 W Beam Guardrail Tangent End Terminal Shown)

** See standard plate 632.40 for delineation.

2" Asphalt concrete surfacing with variable thickness granular material or as specified in the plans.

① Same inslope as mainline inslope or as specified in the plans.

② 4:1 inslope or as specified in the plans.

③ Inslope as specified in the plans.

④ Same slope as roadway cross slope or as specified in the plans. Slope will not be steeper than a 10:1 slope.

GENERAL NOTES:

The tangent guardrail end terminal above is for illustrative purpose only.

* The length of inslope transition varies with the amount of change between inslopes. The length of the transition will change 100' for every whole number change in the inslope. For Example: If the inslope changes from a 5:1 to a 4:1 the length of the inslope transition would be 100'. If the inslope changes from a 6:1 to a 4:1 the length of the inslope transition would be 200'.

Asphalt concrete will be the same type used elsewhere on the project or will be as specified in the plans. If asphalt concrete is not specified in the plans, the asphalt concrete will conform to the Specifications for "Asphalt Concrete Composite."

Granular material will be the same type used elsewhere on the project or will be as specified in the plans. If granular material type is not specified in the plans, the material will conform to the Specifications for "Base Course". The granular material will be placed the same thickness as the mainline surfacing or as specified in the plans.

SDDOT

EMBANKMENT, SURFACING, AND PAYMENT LIMITS FOR W BEAM GUARDRAIL TANGENT END TERMINAL

PLATE NUMBER 630.88

November 14, 2018

Sheet 1 of 1

Published Date: 3rd Qtr. 2022

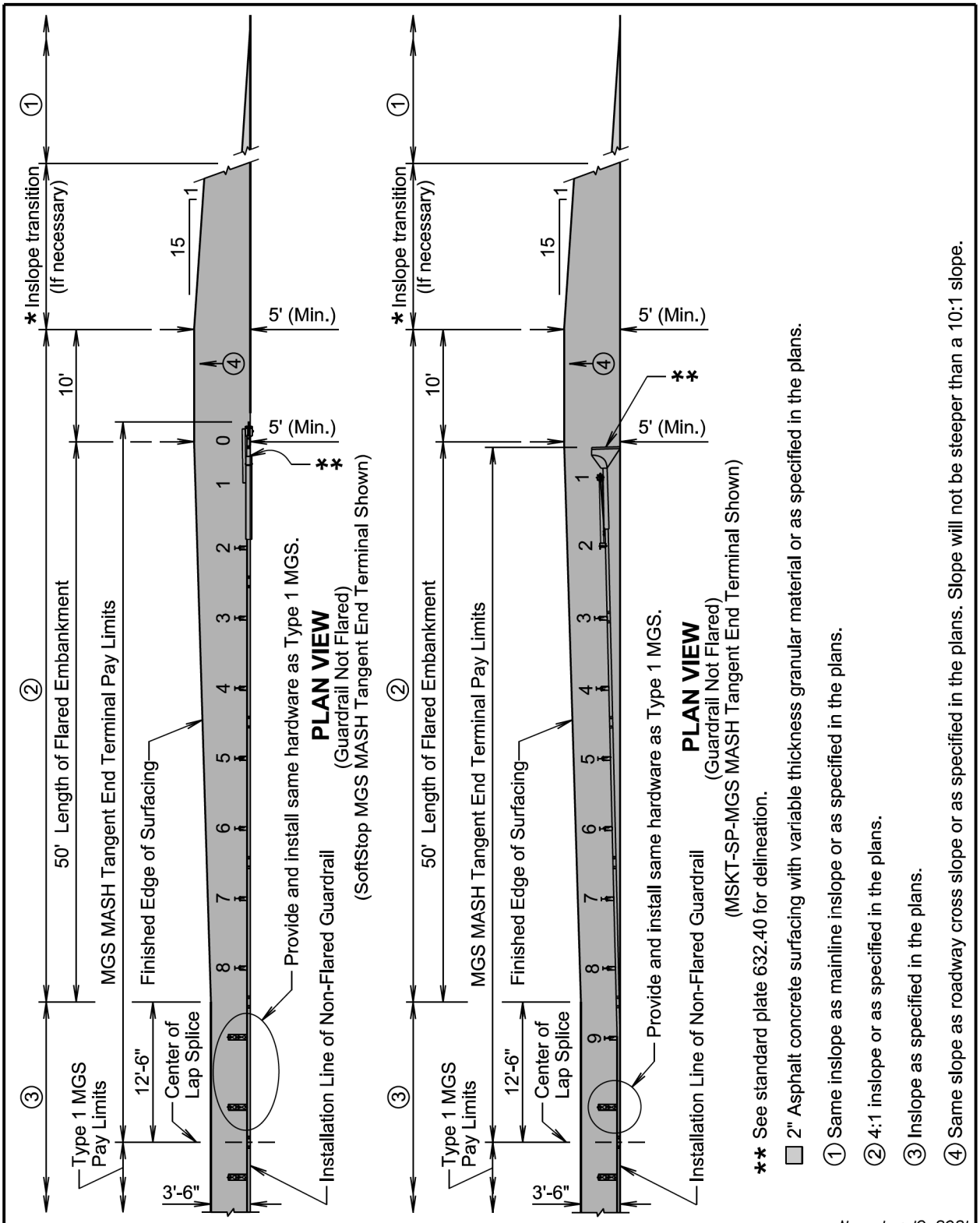

Published Date: 3rd Qtr. 2022

SDDOT

EMBANKMENT, SURFACING, AND PAYMENT LIMITS FOR MGS MASH TANGENT END TERMINAL

PLATE NUMBER 630.89

Sheet 1 of 2

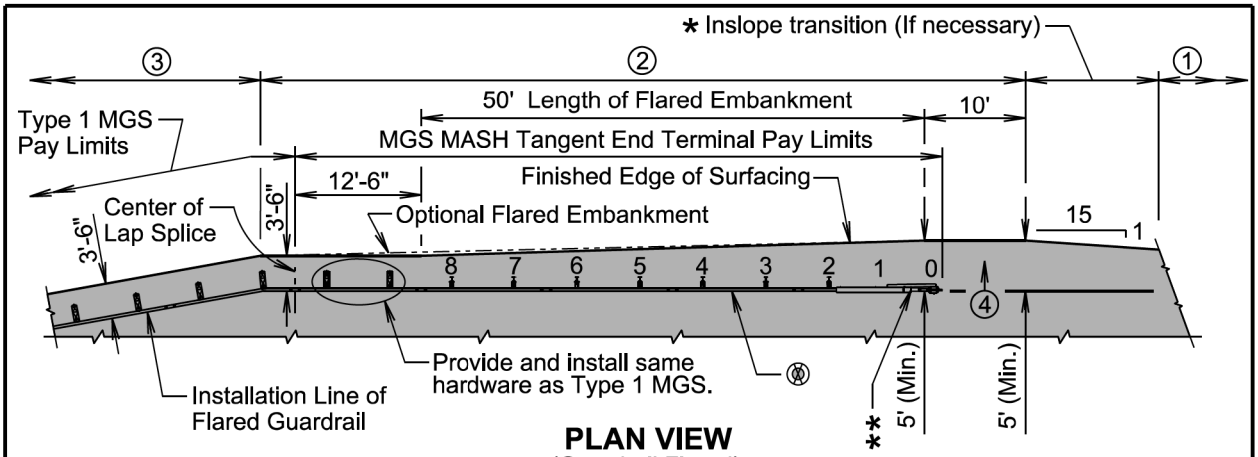

PLAN VIEW
(Guardrail Flared)
(SoftStop MGS MASH Tangent End Terminal Shown)

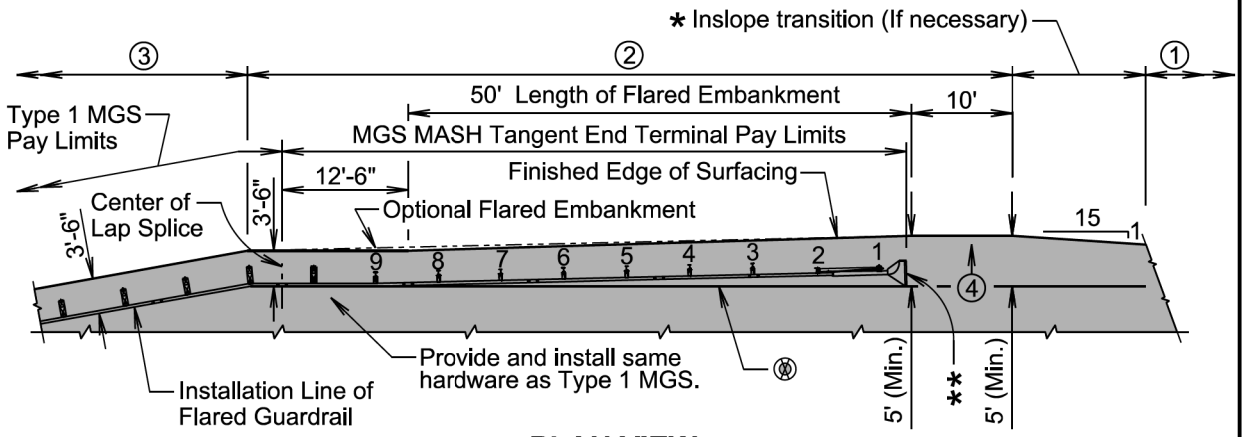

PLAN VIEW
(Guardrail Flared)
(MSKT-SP-MGS MASH Tangent End Terminal Shown)

GENERAL NOTES:

The MGS MASH tangent end terminals above are for illustrative purpose only. Pay limit length of the MGS MASH tangent end terminal is 62'-6".

* The length of inslope transition varies with the amount of change between inslopes. The length of the transition will change 100' for every whole number change in the inslope. For Example: If the inslope changes from a 5:1 to a 4:1 the length of the inslope transition would be 100'. If the inslope changes from a 6:1 to a 4:1 the length of the inslope transition would be 200'.

⊗ The installation reference line for MGS MASH tangent end terminals will always be parallel to the roadway.

Asphalt concrete will be the same type used elsewhere on the project or will be as specified in the plans. If asphalt concrete is not specified in the plans, the asphalt concrete will conform to the Specifications for "Asphalt Concrete Composite."

Granular material will be the same type used elsewhere on the project or will be as specified in the plans. If granular material type is not specified in the plans, the material will conform to the Specifications for "Base Course". The granular material will be placed the same thickness as the mainline surfacing or as specified in the plans.

November 19, 2021

Published Date: 3rd Qtr. 2022	SDDOT	EMBANKMENT, SURFACING, AND PAYMENT LIMITS FOR MGS MASH TANGENT END TERMINAL	PLATE NUMBER 630.89 Sheet 2 of 2

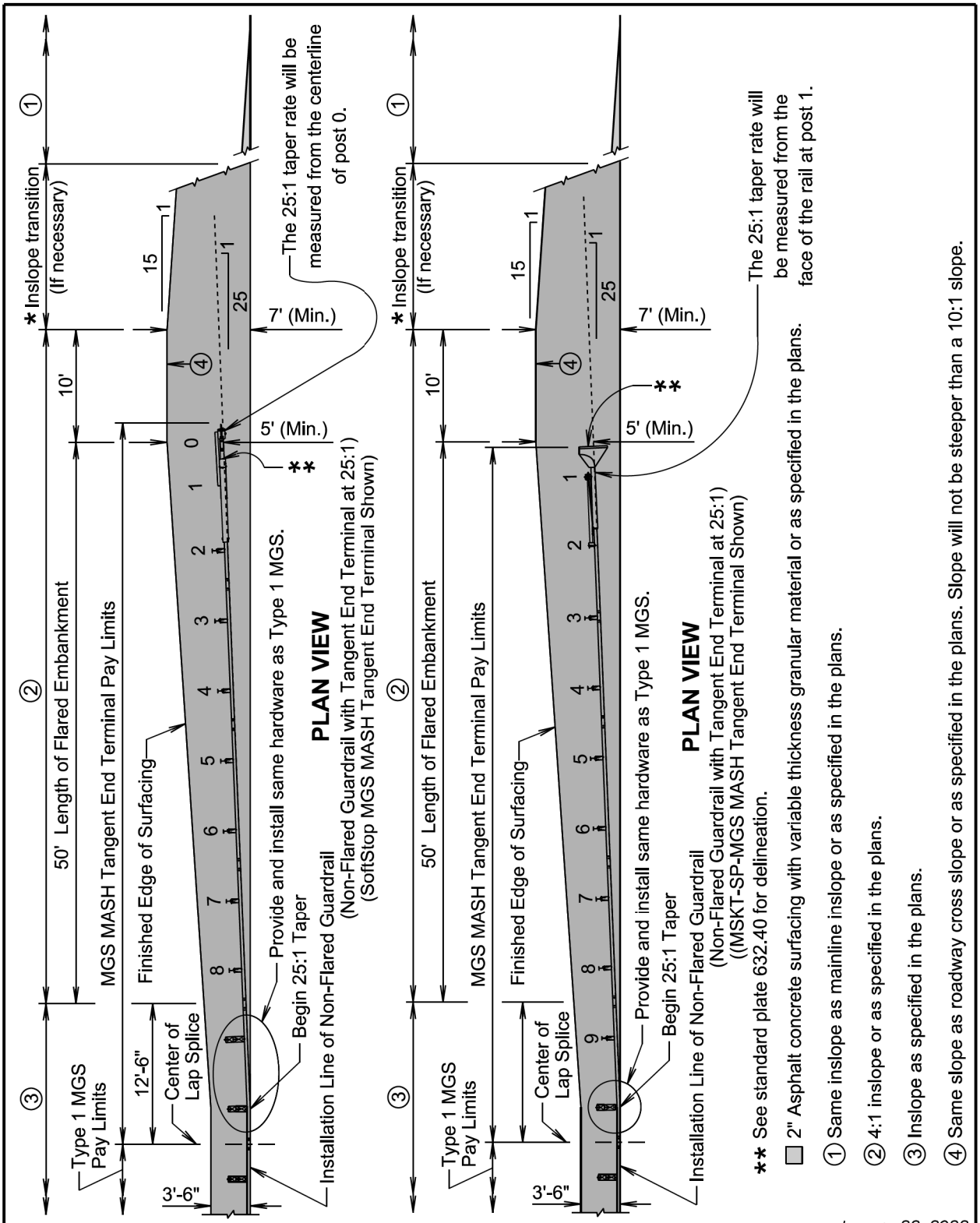

January 22, 2022

Published Date: 3rd Qtr. 2022	SDDOT	EMBANKMENT, SURFACING, AND PAYMENT LIMITS FOR MGS MASH TANGENT END TERMINAL INSTALLED WITH 25:1 TAPER	PLATE NUMBER 630.90 Sheet 1 of 2

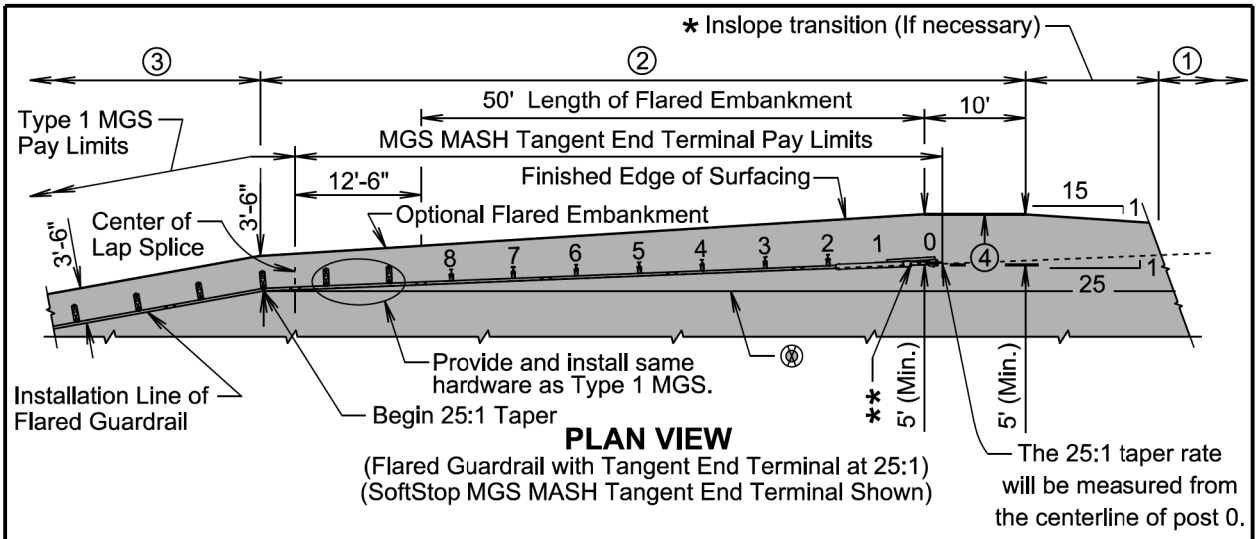

PLAN VIEW
(Flared Guardrail with Tangent End Terminal at 25:1)
(SoftStop MGS MASH Tangent End Terminal Shown)

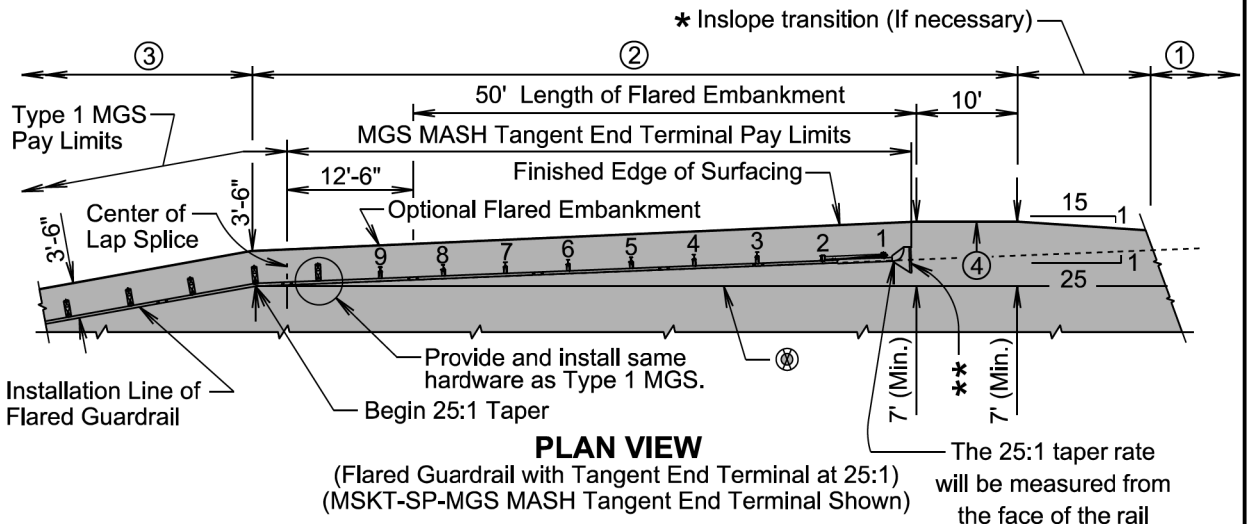

PLAN VIEW
(Flared Guardrail with Tangent End Terminal at 25:1)
(MSKT-SP-MGS MASH Tangent End Terminal Shown)

GENERAL NOTES:

The MGS MASH tangent end terminals above are for illustrative purpose only. Pay limit length of the MGS MASH tangent end terminal is 62'-6".

* The length of inslope transition varies with the amount of change between inslopes. The length of the transition will change 100' for every whole number change in the inslope. For Example: If the inslope changes from a 5:1 to a 4:1 the length of the inslope transition would be 100'. If the inslope changes from a 6:1 to a 4:1 the length of the inslope transition would be 200'.

⊗ The installation reference line for MGS MASH tangent end terminals will always be parallel to the roadway.

Asphalt concrete will be the same type used elsewhere on the project or will be as specified in the plans. If asphalt concrete is not specified in the plans, the asphalt concrete will conform to the Specifications for "Asphalt Concrete Composite."

Granular material will be the same type used elsewhere on the project or will be as specified in the plans. If granular material type is not specified in the plans, the material will conform to the Specifications for "Base Course". The granular material will be placed the same thickness as the mainline surfacing or as specified in the plans.

January 22, 2022

Published Date: 3rd Qtr. 2022	SDDOT	EMBANKMENT, SURFACING, AND PAYMENT LIMITS FOR MGS MASH TANGENT END TERMINAI INSTALLED WITH 25:1 TAPER	PLATE NUMBER 630.90 Sheet 2 of 2

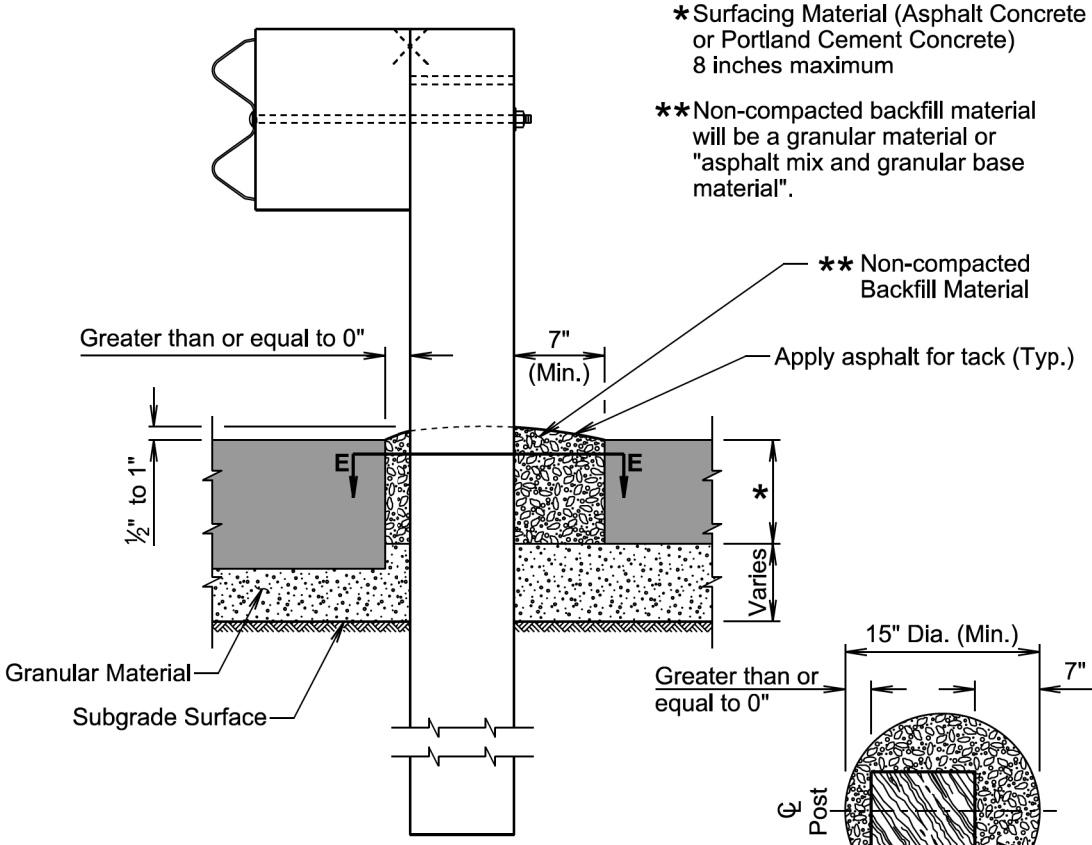

TRANSVERSE SECTION
(Wood post shown for illustrative purpose only)

SECTION E-E
(Round option for leave-out and backfill limits)
(Wood post shown for illustrative purpose only)

GENERAL NOTES:

The leave-out limits may be increased to accommodate construction equipment and tolerances.

When posts are installed in augured or dug holes, the backfill material will be compacted to the bottom of the pavement surfacing material to the satisfaction of the Engineer. The backfill material for the thickness of the pavement surfacing material will be non-compacted.

The backfill material will be mounded ½ inch to 1 inch above the top of the adjacent surfacing as illustrated above.

Asphalt for tack will be applied to the surface of the backfill material at the rate of 0.15 to 0.20 gallons per square yard.

All costs for constructing the leave-out including labor, equipment, and materials which includes the backfill material and tack coat will be incidental to the contract unit price for the respective guardrail contract item.

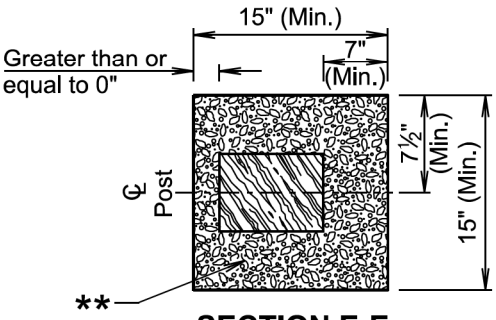

SECTION E-E
(Square option for leave-out and backfill limits)
(Wood post shown for illustrative purpose only)

November 19, 2021

Published Date: 3rd Qtr. 2022	SDDOT	GUARDRAIL POST INSTALLED IN ASPHALT CONCRETE OR PORTLAND CEMENT CONCRETE	PLATE NUMBER 630.96 Sheet 1 of 1

A: Depth of soil over rock formation

B: Depth of embedment into rock formation

* Coarse aggregate backfill size #1 in accordance with Section 820 of the Specifications.

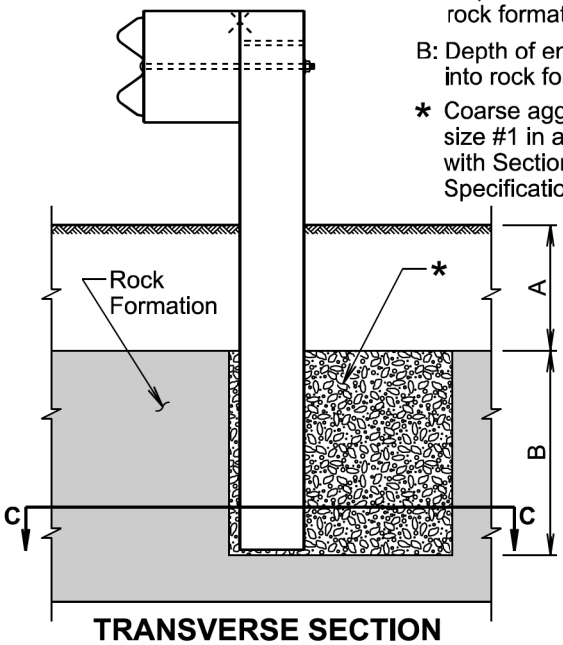

TRANSVERSE SECTION
(Configuration Type 1)
(Wood post shown for illustrative purpose only)

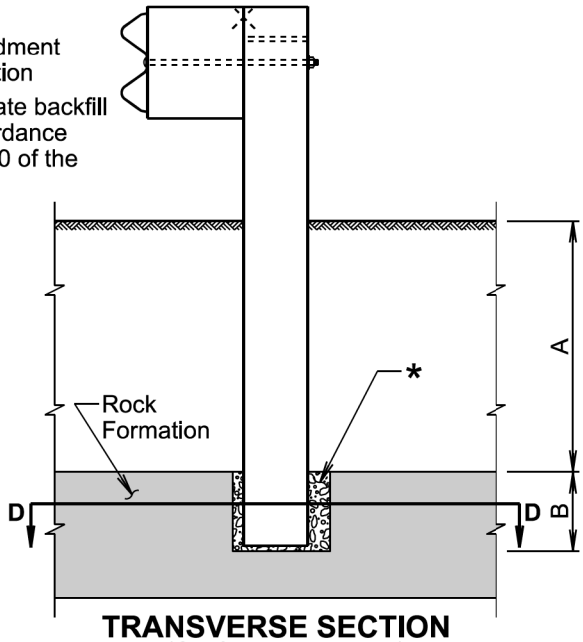

TRANSVERSE SECTION
(Configuration Type 2)
(Wood post shown for illustrative purpose only)

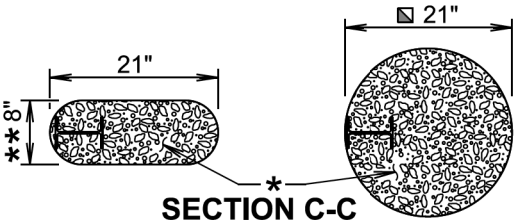

SECTION C-C
(Configuration Type 1)
(Steel posts, either hole shown is acceptable.)

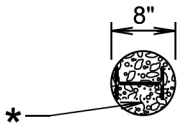

SECTION D-D
(Configuration Type 2)
(Steel Posts)

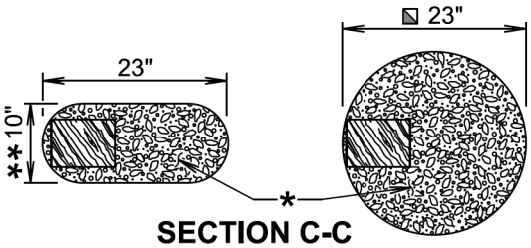

SECTION C-C
(Configuration Type 1)
(Wood posts, either hole shown is acceptable.)

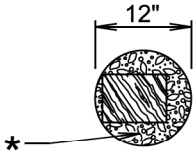

SECTION D-D
(Configuration Type 2)
(Wood Posts)

GENERAL NOTES FOR CONFIGURATION TYPE 1:

The overlying soil depth "A" is 0 to 18 inches and the depth into rock "B" is 24 inches.

** May be increased to 15 inches to accommodate construction tolerances.

May be increased to 24 inches to accommodate construction tolerances.

GENERAL NOTES FOR CONFIGURATION TYPE 2:

The overlying soil depth "A" is 18 inches to full post embedment depth. The required depth into rock "B" is equal to full post embedment depth minus "A".

September 14, 2019

Published Date: 3rd Qtr. 2022	SDDOT	GUARDRAIL POST INSTALLED IN ROCK FORMATION	PLATE NUMBER 630.97 Sheet 1 of 1

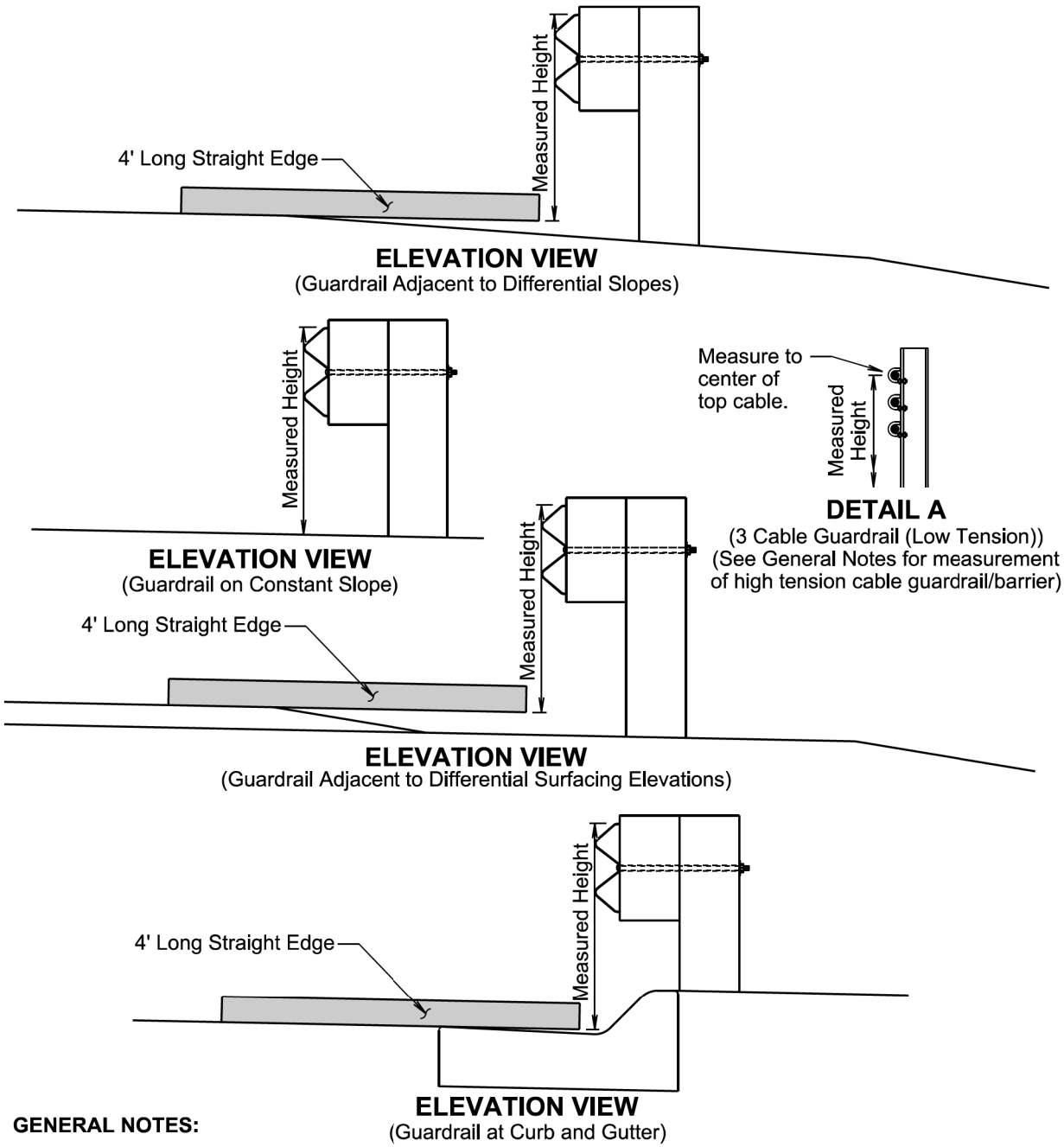

GENERAL NOTES:

The W Beam guardrail shown is for illustrative purpose. The guardrail height for all types of guardrail systems except for high tension cable guardrail/barrier will be measured in accordance with this standard plate.

When measuring height of 3 cable guardrail (low tension) the height will be measured to the center of the top cable. See Detail A.

The height of high tension cable guardrail/barrier will be measured in accordance with the Manufacturer's installation instructions.

September 14, 2019

Published Date: 3rd Qtr. 2022	SDDOT	MEASURING GUARDRAIL HEIGHT	PLATE NUMBER 630.99 Sheet 1 of 1

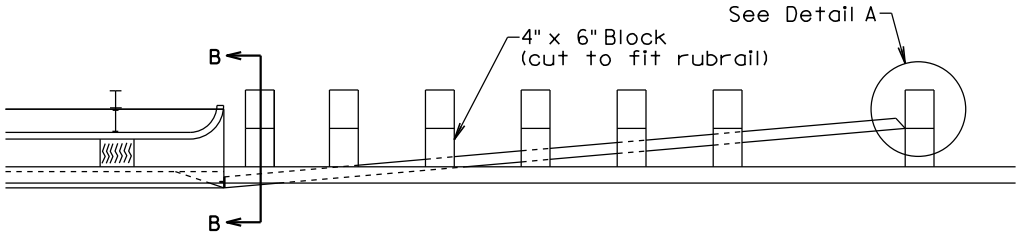

PLAN

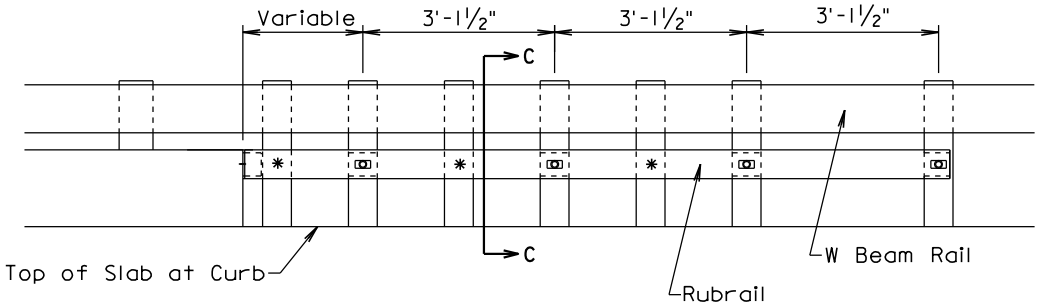

* Rubrail does not have to be attached to these posts.

ELEVATION

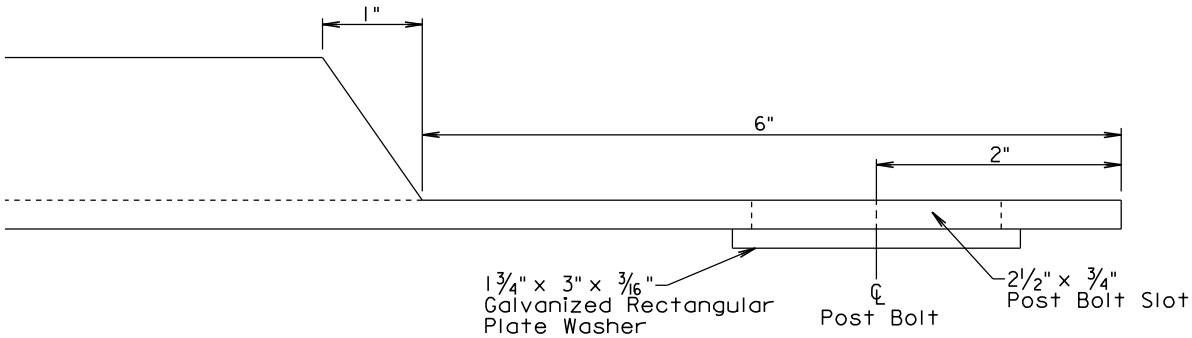

DETAIL A
(Post, Block, and Post Bolt not shown)

GENERAL NOTES:

The steel shall be in conformance with ASTM A 36 and shall be galvanized after fabrication in conformance with ASTM A 123. If pre-galvanized steel members are used, all cuts and welds shall be coated with an approved galvanizing paint.

Offset blocks shall be in conformance with section 630 of the Standard Specifications.

All hardware shall be in conformance with the requirements of AASHTO M 180.

March 31, 2000

RUBRAIL (1 of 2)

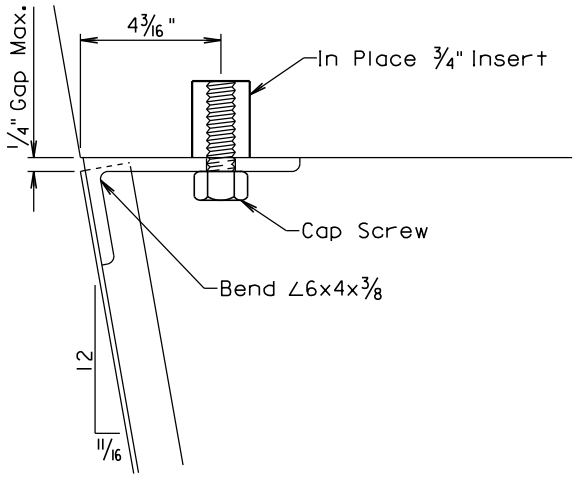

SECTION A-A

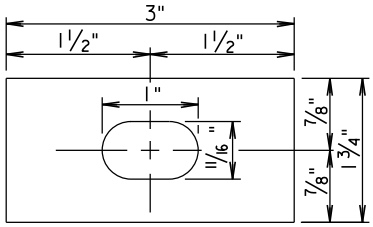

RECTANGULAR PLATE WASHER

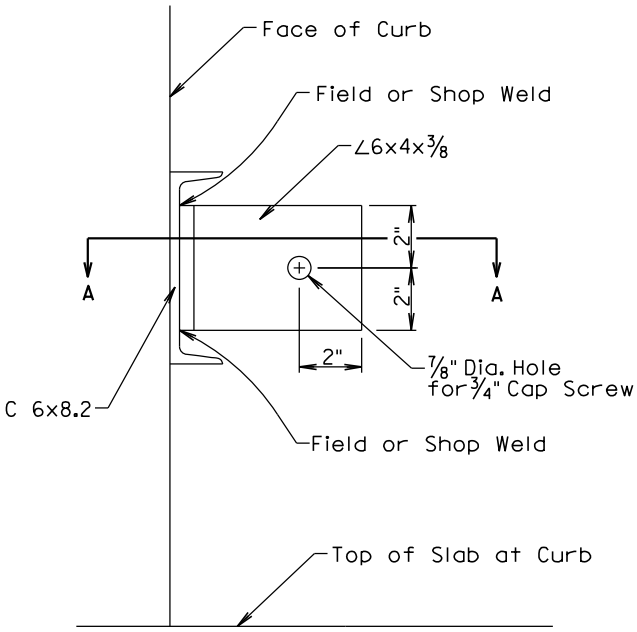

SECTION B-B

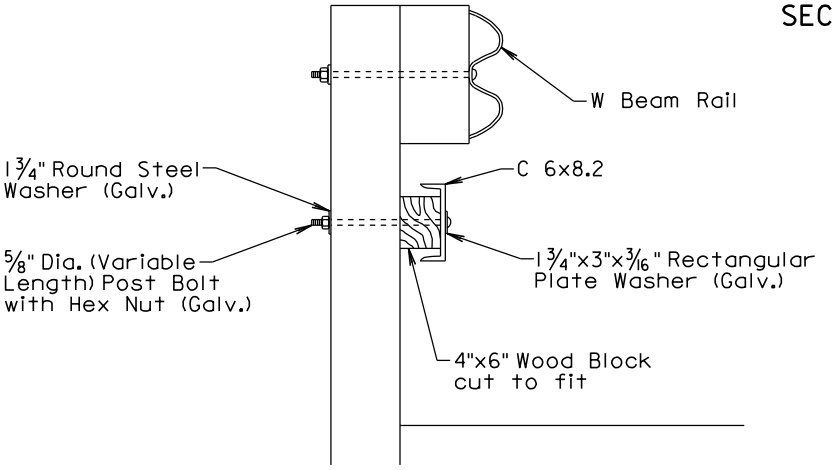

SECTION C-C

March 31, 2000

RUBRAIL (2 of 2)

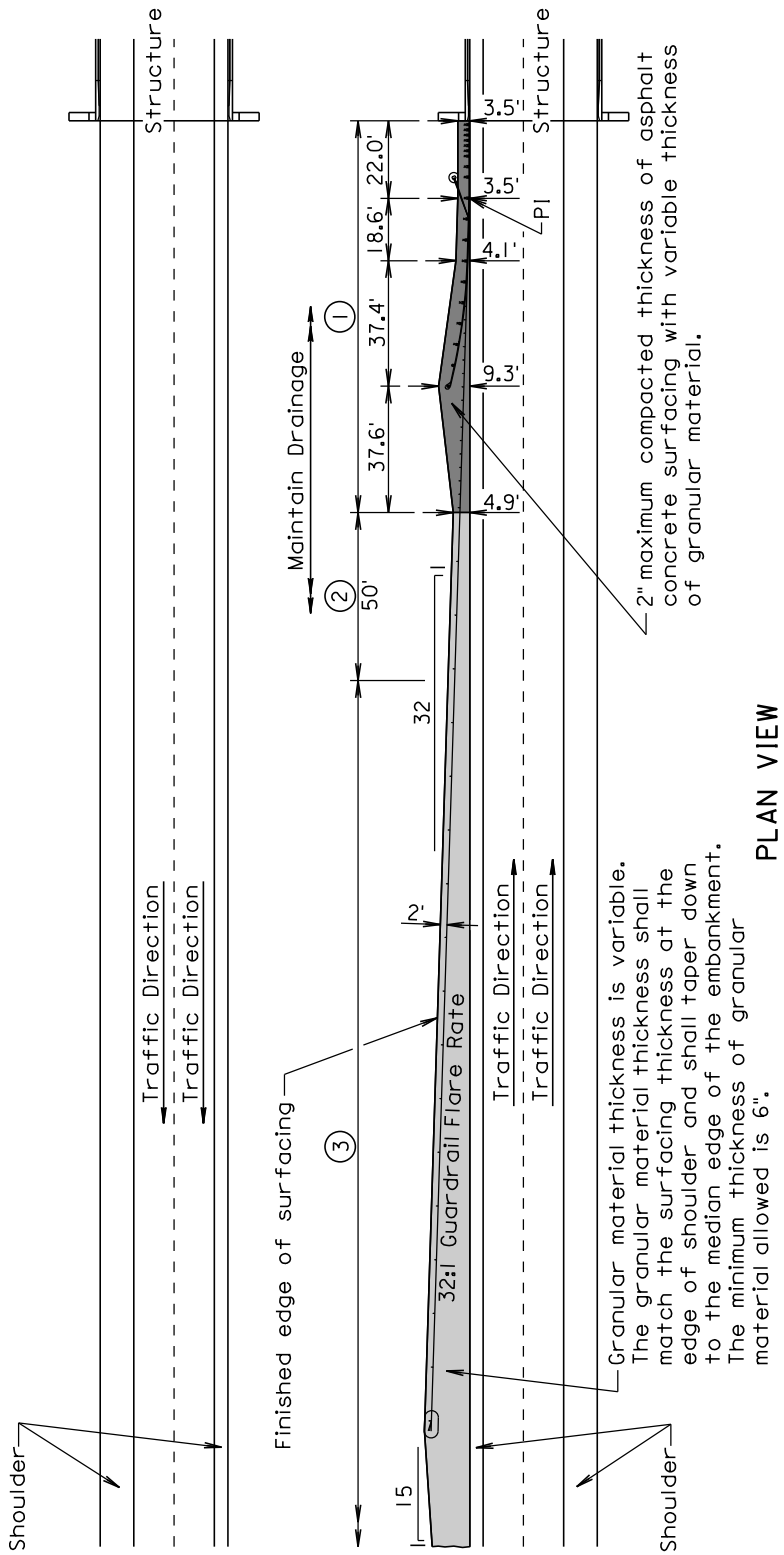

PLAN VIEW

1. Finished embankment surfacing cross slope shall be the same as the roadway cross slope.
2. Finished embankment surfacing cross slope transition.
3. Finished embankment surfacing cross slope shall be 10:1, however, a cross slope flatter than 10:1 may be used to obtain the 6" minimum thickness of granular material.

GENERAL NOTES:

Asphalt concrete shall be the same type used elsewhere on the project or shall be as specified in the plans. If asphalt concrete is not specified in the plans, the asphalt concrete shall conform to the Specifications for "Asphalt Concrete Composite."

Granular material shall be the same type used elsewhere on the project or shall be as specified in the plans. If granular material type is not specified in the plans, the material shall conform to the Specifications for "Base Course".

February 10, 2014

EMBANKMENT & SURFACING FOR TYPICAL MEDIAN PROTECTION

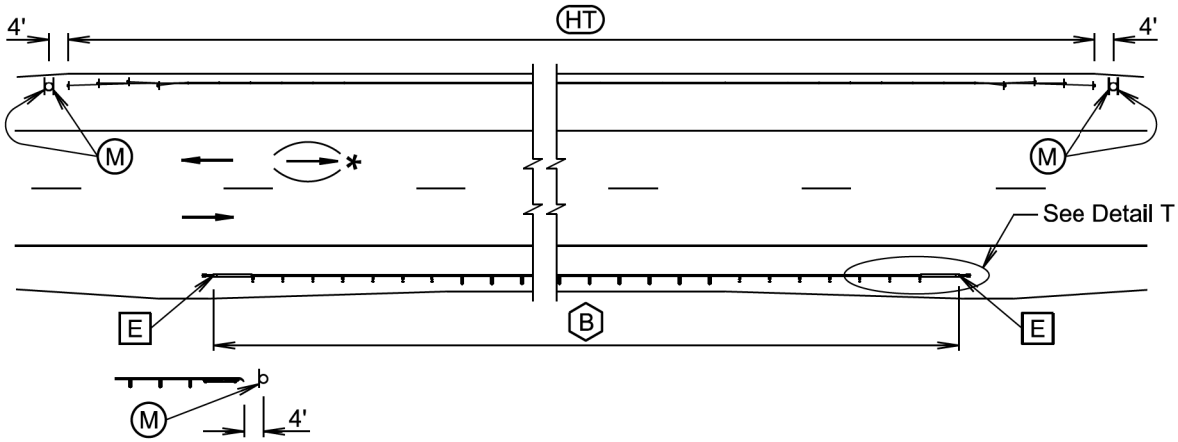

DETAIL T
(Provide a Type 2 Object Marker if a Trailing End Terminal is installed)

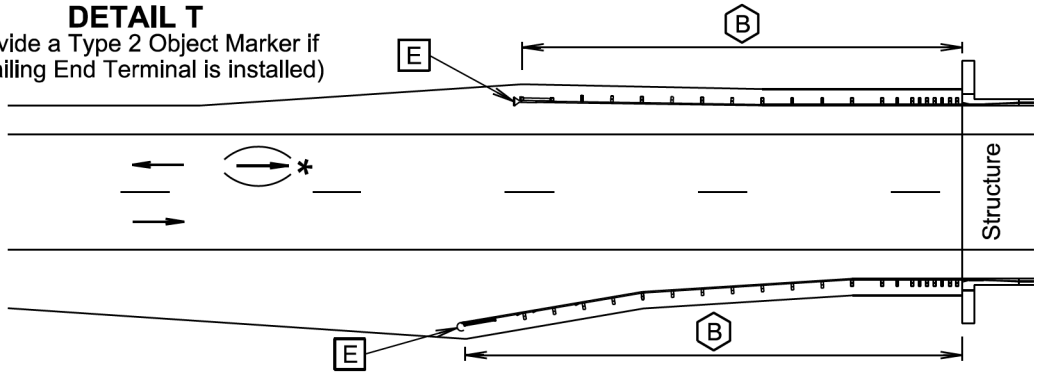

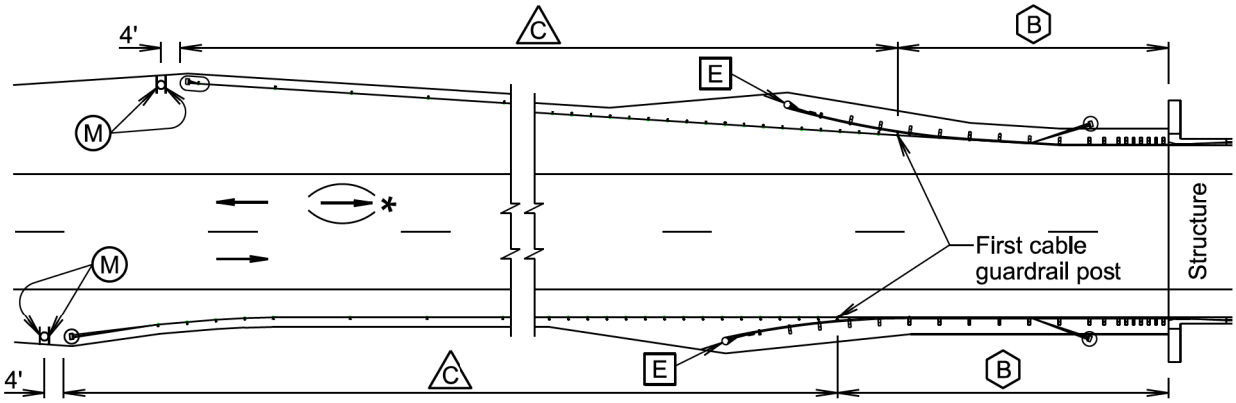

PLAN VIEW
(Typical Guardrail Layouts)

- (B) Steel Beam Guardrail Delineation
- [E] Guardrail End Terminal Object Marker
- (C) 3 Cable Guardrail (Low Tension) Delineation
- (HT) High Tension Cable Guardrail Delineation
- (M) Type 2 Object Marker

*For two-way traffic, install delineation at the opposite end of structure the same as shown. Back-to-back delineation is required for two-way traffic, single-sided delineation for one-way traffic.

December 23, 2019

Published Date: 3rd Qtr. 2022	SDDOT	DELINEATION OF GUARDRAIL	PLATE NUMBER 632.40 Sheet 1 of 4

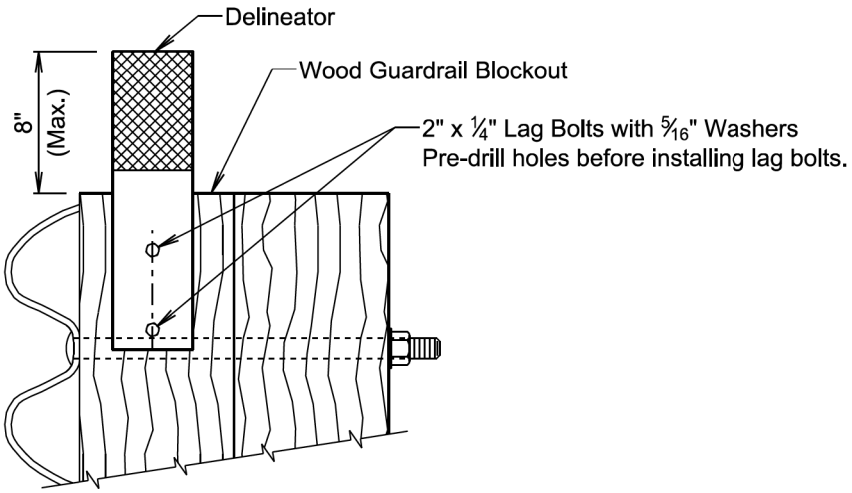

(B) STEEL BEAM GUARDRAIL DELINEATION

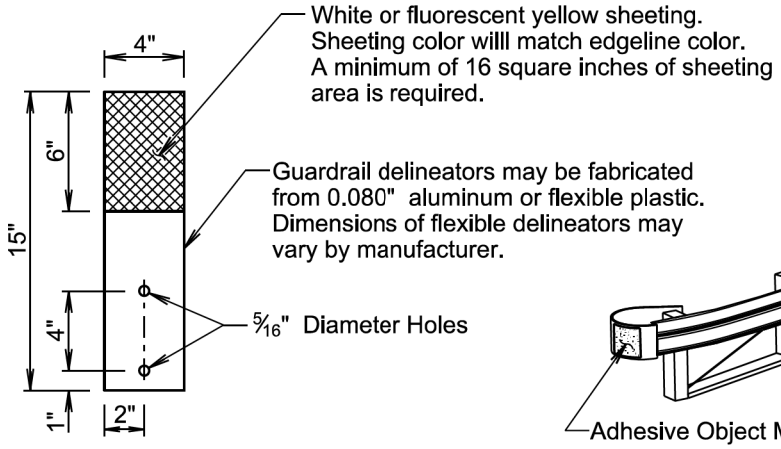

DELINEATOR
(For Steel Beam Guardrail)

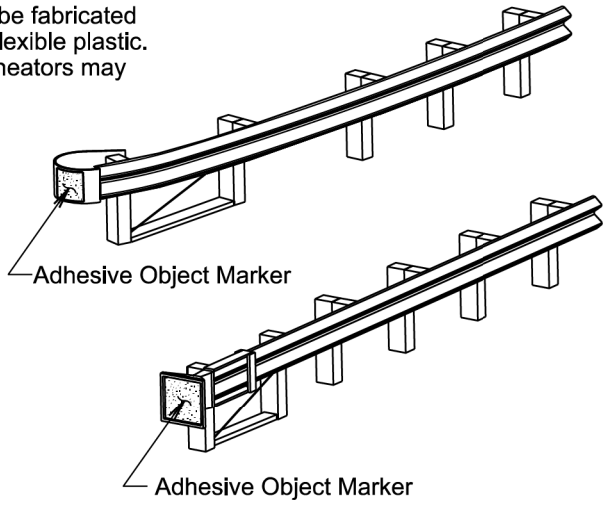

(E) GUARDRAIL END TERMINAL OBJECT MARKER

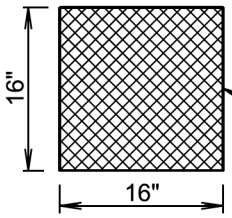

ADHESIVE OBJECT MARKER

Adhesive object marker dimensions may vary due to shape of terminal end. A minimum of 256 square inches of object marker sheeting area is required. The sheeting will be fluorescent yellow.

December 23, 2019

Published Date: 3rd Qtr. 2022	SDDOT	DELINEATION OF GUARDRAIL	PLATE NUMBER 632.40 Sheet 2 of 4

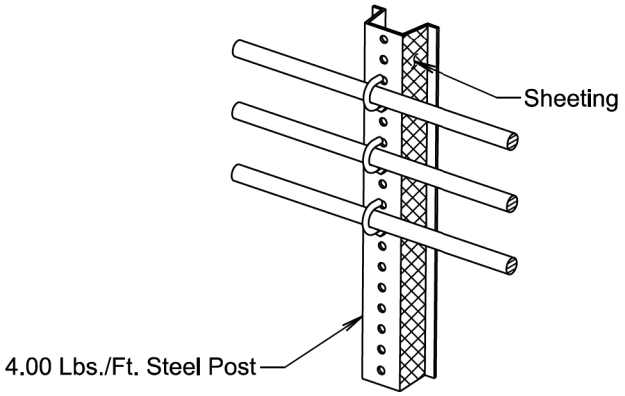

(C) 3 CABLE GUARDRAIL (LOW TENSION) DELINEATION

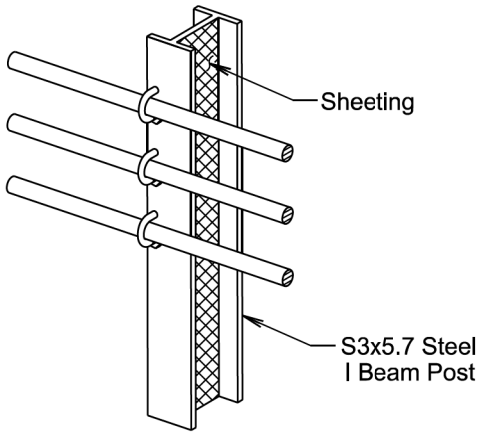

(C) 3 CABLE GUARDRAIL (LOW TENSION) DELINEATION

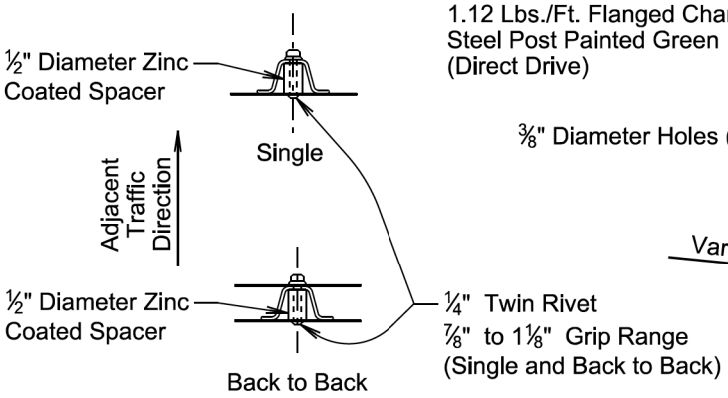

PLAN VIEW
(Type 2 Object Marker Details and Post Orientation)

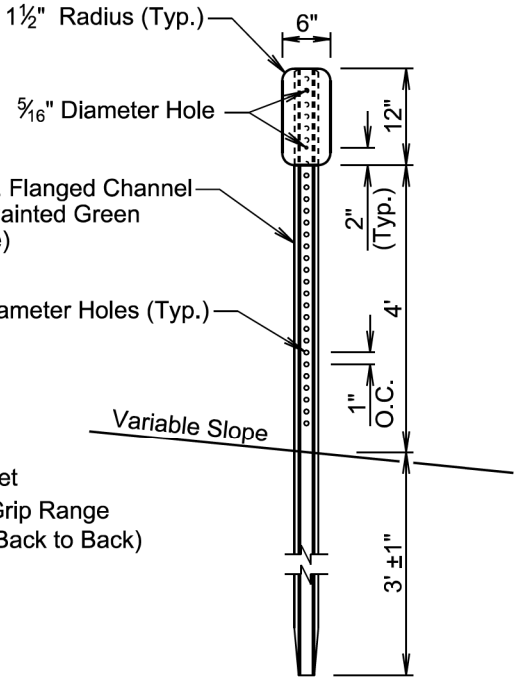

ELEVATION VIEW
(M) (Type 2 Object Marker)
(For Marking 3 Cable Guardrail (Low Tension) Anchor, High Tension Cable Guardrail Anchor, and Trailing End Terminal)

December 23, 2019

Published Date: 3rd Qtr. 2022	SDDOT	DELINEATION OF GUARDRAIL	PLATE NUMBER 632.40 Sheet 3 of 4

GENERAL NOTES:

The delineation of high tension cable guardrail will be reflective sheeting placed back to back on every other post cap or cable spacer. The sheeting will be type XI in conformance with ASTM D4956. The color of the reflective sheeting shall be the same as the nearest pavement marking.

The delineators for steel beam guardrail and sheeting on 3 cable guardrail (low tension) posts will be covered with a minimum of 16 square inches of reflective sheeting. The reflective sheeting will be type XI in conformance with ASTM D4956. Along two-way roadways the sheeting will be on both sides of the delineators and guardrail posts and will be white in color. For one-way roadways the sheeting will only be required on the side facing traffic and the color will be the same as the nearest pavement marking, yellow on the left side of the roadway and white on the right side.

When steel beam guardrail is attached to a bridge the first delineator will be attached to the post nearest the bridge.

At bridges with guardrail less than 200 feet in length, a minimum of 4 delineators will be placed in addition to the end terminal yellow object marker. The spacing between the delineators will be approximately one third of the length of the guardrail.

At bridges with guardrail 200 feet and greater in length, including bridges that have steel beam guardrail transitioning to 3 cable guardrail (low tension), the delineators will be placed at a spacing of approximately 50 feet. Delineation will extend throughout the length of the guardrail system.

Steel beam guardrail that is not attached to a bridge and is less than 200 feet in length, a minimum of 4 delineators will be placed in addition to the end terminal yellow object markers. The spacing between the delineators will be approximately one third of the length of the guardrail.

Steel beam guardrail that is not attached to a bridge and is 200 feet and greater in length, including steel beam guardrail transitioning to 3 cable guardrail (low tension), the delineators will be placed at a spacing of approximately 50 feet. Delineation will extend throughout the length of the guardrail system.

All costs for furnishing and installing single or back to back guardrail delineation on 3 cable guardrail and steel beam guardrail will be included in the contract unit price per each for "Guardrail Delineator".

All costs for furnishing and installing the reflective sheeting on the cable spacers or post caps for the high tension cable guardrail will be incidental to the respective high tension cable guardrail contract item.

An adhesive object marker will be placed on the end of the W beam guardrail or MGS end terminal. The adhesive object marker dimensions may vary due to the shape of the terminal end. A minimum of 256 square inches of object marker reflective sheeting area is required. The reflective sheeting will be fluorescent yellow type XI sheeting in conformance with ASTM D4956. All costs for furnishing and installing the adhesive object marker will be incidental to various contract items.

A type 2 object marker will be placed adjacent to the 3 cable guardrail (low tension) anchor, high tension cable guardrail anchor, and trailing end terminal at the location noted on sheet 1 of this standard plate. The type 2 object marker (6" x 12") will have fluorescent yellow type XI sheeting in conformance with ASTM D4956. All costs for furnishing and installing the type 2 object marker including the steel post, 6" x 12" reflective panel, and hardware will be included in the contract unit price per each for "Type 2 Object Marker" for single-sided and "Type 2 Object Marker Back to Back" for back to back type 2 object markers.

December 23, 2019

Published Date: 3rd Qtr. 2022	SDDOT	DELINEATION OF GUARDRAIL	PLATE NUMBER 632.40 Sheet 4 of 4