| STATE OF SOUTH DAKOTA | PROJECT | SHEET | TOTAL SHEETS |
|---|---|---|---|
| | 000I-469<br>000N-469<br>000P-469 | 01 | 29 |

Plotting Date: 04-OCT-2011

# STATE OF SOUTH DAKOTA
# DEPARTMENT OF TRANSPORTATION
## PLANS FOR PROPOSED

# PROJECT NOS. 000I–469, 000N–469, & 000P–469 RAPID CITY REGION GUARDRAIL MAINTENANCE

GUARDRAIL REPAIR AT VARIOUS LOCATIONS
ON A DEMAND BASIS

PCNs 12em, 12en, & 12ep

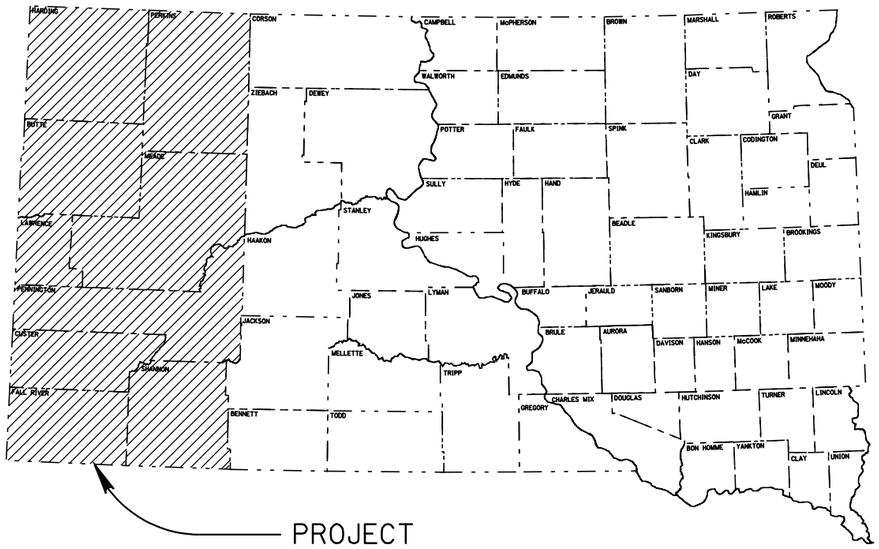


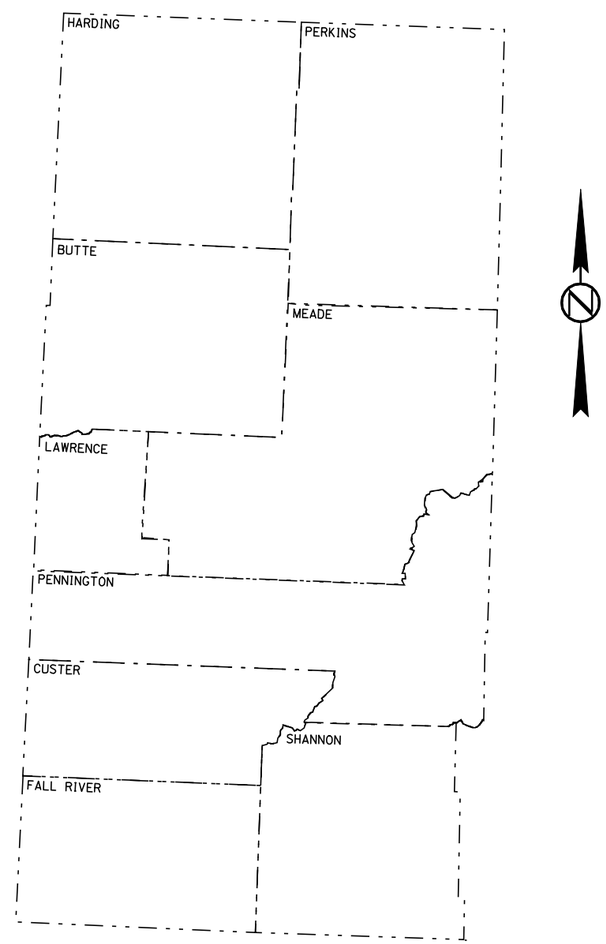


INDEX OF SHEETS


1 Title Sheet
2-3 Estimate of Quantities and Plan Notes
4-29 Standard Plates


LEGEND

STATE AND NATIONAL LINE
COUNTY LINE
SECTION LINE
QUARTER LINE
SIXTEENTH LINE
PROPERTY LINE
CONSTRUCTION LINE
R.O.W. LINE
WORK LIMITS


PLOT SCALE - 200.000000:1.000000
PLOTTED FROM - TRRC11951
FILE - U:\REGIONRC\CONTRACTMAINTENANCE\FY2012\PLANS\2012 GUARDRAIL\GUARDRAIL PLOTTING SHEET.DGN

## ESTIMATE OF QUANTITIES, 000I-469, PCN i2em, (Interstate)

| Bid Item Number | Item | Quantity | Unit |
|---|---|---|---|
| 009E0198 | Mobilization 2 | 2 | Each |
| 110E0700 | Remove 3 Cable Guardrail | 25 | Ft |
| 110E0730 | Remove Beam Guardrail | 100.0 | Ft |
| 110E0770 | Remove W Beam Guardrail Breakaway Cable Terminal | 1 | Each |
| 110E0800 | Remove W Beam Guardrail End Terminal | 1 | Each |
| 110E6230 | Remove W Beam Guardrail for Reset | 25.0 | Ft |
| 629E0100 | 3 Cable Guardrail | 100 | Ft |
| 629E0300 | 3 Cable Guardrail Slip Base Anchor Assembly | 1 | Each |
| 629E1000 | Repair 3 Cable Guardrail | 300 | Ft |
| 629E1100 | 3 Cable Guardrail End Post | 3 | Each |
| 629E1102 | 3 Cable Guardrail Intermediate Post | 40 | Each |
| 629E1104 | 3 Cable Guardrail Post, Winter | 15 | Each |
| 629E1106 | Drive Down 3 Cable Guardrail Post | 10 | Each |
| 629E1110 | Cable Anchor Bracket | 1 | Each |
| 629E1112 | Cable Splice | 1 | Each |
| 629E1114 | 3 Cable Guardrail J Hook Bolt | 100 | Each |
| 629E1116 | Steel Turnbuckle Cable End Assembly | 1 | Each |
| 629E1118 | Spring Cable End Assembly with Turnbuckle | 2 | Each |
| 629E1120 | W Beam to 3 Cable Transition Bracket | 1 | Each |
| 629E1122 | 3 Cable Guardrail End Post Cap | 5 | Each |
| 630E0200 | Straight Class A Thrie Beam Rail | 12.5 | Ft |
| 630E0210 | Straight Class B Thrie Beam Rail | 12.5 | Ft |
| 630E1150 | Straight Double Class B W Beam Guardrail with Wood Posts | 12.5 | Ft |
| 630E1200 | Straight Class A W Beam Rail | 75.0 | Ft |
| 630E1210 | Straight Class B W Beam Rail | 25.0 | Ft |
| 630E2000 | W Beam to Thrie Beam Guardrail Transition | 1 | Each |
| 630E2015 | W Beam Guardrail Flared End Terminal | 1 | Each |
| 630E2020 | W Beam Guardrail Tangent End Terminal | 1 | Each |
| 630E2030 | W Beam Guardrail Breakaway Cable Terminal | 1 | Each |
| 630E2110 | Beam Guardrail Post and Block | 10 | Each |
| 630E2120 | Beam Guardrail Post and Block, Winter | 5 | Each |
| 630E2205 | Breakaway Cable Terminal End Post | 1 | Each |
| 630E2210 | Breakaway Cable Terminal End Rail | 1 | Each |
| 630E2215 | W Beam Guardrail End Section Buffer | 1 | Each |
| 630E5120 | Reset Thrie Beam Rail | 12.5 | Ft |
| 630E5160 | Reset W Beam Rail | 12.5 | Ft |
| 630E5170 | Reset Double W Beam Rail | 12.5 | Ft |
| 630E5520 | Drive Down Beam Guardrail Post | 3 | Each |
| 630E5550 | Reset Beam Guardrail Post and Block | 5 | Each |
| 634E0010 | Flagging | 3 | Hour |
| 634E0125 | Traffic Control for Guardrail Repair | 2 | Site |
| 634E0420 | Type C Advance Warning Arrow Panel | 1 | Each |

## WORK DESCRIPTION

Work on the contract shall include the following:

1. Repair of guardrail at various locations in the Rapid City Region on a demand basis.

## SPECIFICATIONS

Standard Specifications For Roads And Bridges, 2004 Edition and Required Provisions, Supplemental Specifications and or Special Provisions as included in the Proposal.

## ESTIMATE OF QUANTITIES, 000N-469, PCN i2en, (Non-Priority)

| Bid Item Number | Item | Quantity | Unit |
|---|---|---|---|
| 009E0197 | Mobilization 1 | 2 | Each |
| 009E0198 | Mobilization 2 | 2 | Each |
| 009E0199 | Mobilization 3 | 2 | Each |
| 110E0700 | Remove 3 Cable Guardrail | 25 | Ft |
| 110E0730 | Remove Beam Guardrail | 100.0 | Ft |
| 110E0770 | Remove W Beam Guardrail Breakaway Cable Terminal | 1 | Each |
| 110E0800 | Remove W Beam Guardrail End Terminal | 1 | Each |
| 110E6230 | Remove W Beam Guardrail for Reset | 25.0 | Ft |
| 629E0100 | 3 Cable Guardrail | 100 | Ft |
| 629E0300 | 3 Cable Guardrail Slip Base Anchor Assembly | 1 | Each |
| 629E1000 | Repair 3 Cable Guardrail | 300 | Ft |
| 629E1100 | 3 Cable Guardrail End Post | 3 | Each |
| 629E1102 | 3 Cable Guardrail Intermediate Post | 40 | Each |
| 629E1104 | 3 Cable Guardrail Post, Winter | 15 | Each |
| 629E1106 | Drive Down 3 Cable Guardrail Post | 10 | Each |
| 629E1110 | Cable Anchor Bracket | 1 | Each |
| 629E1112 | Cable Splice | 1 | Each |
| 629E1114 | 3 Cable Guardrail J Hook Bolt | 100 | Each |
| 629E1116 | Steel Turnbuckle Cable End Assembly | 1 | Each |
| 629E1118 | Spring Cable End Assembly with Turnbuckle | 2 | Each |
| 629E1120 | W Beam to 3 Cable Transition Bracket | 1 | Each |
| 629E1122 | 3 Cable Guardrail End Post Cap | 5 | Each |
| 630E0200 | Straight Class A Thrie Beam Rail | 12.5 | Ft |
| 630E0210 | Straight Class B Thrie Beam Rail | 12.5 | Ft |
| 630E1150 | Straight Double Class B W Beam Guardrail with Wood Posts | 12.5 | Ft |
| 630E1200 | Straight Class A W Beam Rail | 75.0 | Ft |
| 630E1210 | Straight Class B W Beam Rail | 25.0 | Ft |
| 630E2000 | W Beam to Thrie Beam Guardrail Transition | 1 | Each |
| 630E2015 | W Beam Guardrail Flared End Terminal | 1 | Each |
| 630E2020 | W Beam Guardrail Tangent End Terminal | 1 | Each |
| 630E2030 | W Beam Guardrail Breakaway Cable Terminal | 1 | Each |
| 630E2110 | Beam Guardrail Post and Block | 10 | Each |
| 630E2120 | Beam Guardrail Post and Block, Winter | 5 | Each |
| 630E2205 | Breakaway Cable Terminal End Post | 1 | Each |
| 630E2210 | Breakaway Cable Terminal End Rail | 1 | Each |
| 630E2215 | W Beam Guardrail End Section Buffer | 1 | Each |
| 630E5120 | Reset Thrie Beam Rail | 12.5 | Ft |
| 630E5160 | Reset W Beam Rail | 12.5 | Ft |
| 630E5170 | Reset Double W Beam Rail | 12.5 | Ft |
| 630E5520 | Drive Down Beam Guardrail Post | 3 | Each |
| 630E5550 | Reset Beam Guardrail Post and Block | 5 | Each |
| 634E0010 | Flagging | 3 | Hour |
| 634E0125 | Traffic Control for Guardrail Repair | 6 | Site |
| 634E0420 | Type C Advance Warning Arrow Panel | 1 | Each |

## CONTRACT TIME PROVISIONS

1. The contract will expire on September 30, 2012.

2. At such time as repairs are required, the Contractor will be notified. The Contractor will have 7 calendar days to complete the repairs.

## ESTIMATE OF QUANTITIES, 000P-469, PCN i2ep, (Priority)

| Bid Item Number | Item | Quantity | Unit |
|---|---|---|---|
| 009E0197 | Mobilization 1 | 2 | Each |
| 009E0198 | Mobilization 2 | 2 | Each |
| 009E0199 | Mobilization 3 | 2 | Each |
| 110E0700 | Remove 3 Cable Guardrail | 25 | Ft |
| 110E0730 | Remove Beam Guardrail | 100.0 | Ft |
| 110E0770 | Remove W Beam Guardrail Breakaway Cable Terminal | 1 | Each |
| 110E0800 | Remove W Beam Guardrail End Terminal | 1 | Each |
| 110E6230 | Remove W Beam Guardrail for Reset | 25.0 | Ft |
| 629E0100 | 3 Cable Guardrail | 100 | Ft |
| 629E0300 | 3 Cable Guardrail Slip Base Anchor Assembly | 1 | Each |
| 629E1000 | Repair 3 Cable Guardrail | 300 | Ft |
| 629E1100 | 3 Cable Guardrail End Post | 3 | Each |
| 629E1102 | 3 Cable Guardrail Intermediate Post | 40 | Each |
| 629E1104 | 3 Cable Guardrail Post, Winter | 15 | Each |
| 629E1106 | Drive Down 3 Cable Guardrail Post | 10 | Each |
| 629E1110 | Cable Anchor Bracket | 1 | Each |
| 629E1112 | Cable Splice | 1 | Each |
| 629E1114 | 3 Cable Guardrail J Hook Bolt | 100 | Each |
| 629E1116 | Steel Turnbuckle Cable End Assembly | 1 | Each |
| 629E1118 | Spring Cable End Assembly with Turnbuckle | 2 | Each |
| 629E1120 | W Beam to 3 Cable Transition Bracket | 1 | Each |
| 629E1122 | 3 Cable Guardrail End Post Cap | 5 | Each |
| 630E0200 | Straight Class A Thrie Beam Rail | 12.5 | Ft |
| 630E0210 | Straight Class B Thrie Beam Rail | 12.5 | Ft |
| 630E1150 | Straight Double Class B W Beam Guardrail with Wood Posts | 12.5 | Ft |
| 630E1200 | Straight Class A W Beam Rail | 75.0 | Ft |
| 630E1210 | Straight Class B W Beam Rail | 25.0 | Ft |
| 630E2000 | W Beam to Thrie Beam Guardrail Transition | 1 | Each |
| 630E2015 | W Beam Guardrail Flared End Terminal | 1 | Each |
| 630E2020 | W Beam Guardrail Tangent End Terminal | 1 | Each |
| 630E2030 | W Beam Guardrail Breakaway Cable Terminal | 1 | Each |
| 630E2110 | Beam Guardrail Post and Block | 10 | Each |
| 630E2120 | Beam Guardrail Post and Block, Winter | 5 | Each |
| 630E2205 | Breakaway Cable Terminal End Post | 1 | Each |
| 630E2210 | Breakaway Cable Terminal End Rail | 1 | Each |
| 630E2215 | W Beam Guardrail End Section Buffer | 1 | Each |
| 630E5120 | Reset Thrie Beam Rail | 12.5 | Ft |
| 630E5160 | Reset W Beam Rail | 12.5 | Ft |
| 630E5170 | Reset Double W Beam Rail | 12.5 | Ft |
| 630E5520 | Drive Down Beam Guardrail Post | 3 | Each |
| 630E5550 | Reset Beam Guardrail Post and Block | 5 | Each |
| 634E0010 | Flagging | 3 | Hour |
| 634E0125 | Traffic Control for Guardrail Repair | 6 | Site |
| 634E0420 | Type C Advance Warning Arrow Panel | 1 | Each |

## UTILITIES

The Contractor shall contact the involved utility companies through South Dakota One Call (1-800-781-7474) prior to starting work. It shall be the responsibility of the Contractor to coordinate work with the utility owners to avoid damage to existing facilities.

Utilities are not planned to be affected on this project. If utilities are identified near the improvement area through the SD One Call Process as required by South Dakota Codified Law 49-7A and Administrative Rule Article 20:25, the Contractor shall contact the Project Engineer to determine modifications that will be necessary to avoid utility impacts.

**MOBILIZATION**

If more than one location within an area is to be repaired, the Contractor will be compensated for only one mobilization per area.

Mobilization 1 is the cost of mobilization per each time the Contractor is called in by the Belle Fourche Area Engineer, or his designated representative, to perform guardrail repair within the Belle Fourche Area.

Mobilization 2 is the cost of mobilization per each time the Contractor is called in by the Rapid City Area Engineer, or his designated representative, to perform guardrail repair within the Rapid City Area.

Mobilization 3 is the cost of mobilization per each time the Contractor is called in by the Custer Area Engineer, or his designated representative, to perform guardrail repair within the Custer Area

Mobilization will be paid once each time the Contractor is called to repair guardrail, regardless of the number of sites requiring repair within the project limits.

Guardrail repairs will be limited to all Interstate and State highways within the boundaries of the Rapid City Region. Maintenance maps for priority and non-priority routes are available at the Rapid City Region office.

**GENERAL MAINTENANCE OF TRAFFIC**

Traffic control shall be maintained in accordance with the Manual on Uniform Traffic Control Devices (MUTCD), Section 634 of the Standard Specifications and these plans.

The Contractor shall be required to have a person available 24 hours/day, 7 days/week to maintain traffic control devices. The name and cellular telephone number shall be provided to the Project Engineer and each Area Office.

The bid item “Traffic Control for Guardrail Repair” shall include all necessary traffic control devices as required by these plans and shall be measured and paid and the contract unit price per “site”. The Contractor shall be compensated each time they are required to mobilize to a “site” for guardrail repair. If the Contractor relocates the traffic control devices to a different location during the same mobilization, additional compensation will not be made and it shall be considered the same “site”.

Equipment will be confined to the shoulder, a driving lane closed to traffic, or a passing lane closed to traffic. Closure of both driving and passing lanes simultaneously will not be permitted.

The Contractor shall not cross interstate medians to travel between work sites in opposite interstate lanes. Contractor employees will not be allowed to use the SDDOT maintenance crossovers.

Work activities shall be conducted during daylight hours only. Traffic shall be returned to the normal driving lanes during non-working hours. Storage of vehicles and equipment shall be outside the clear zone and as near to the right-of-way as possible.

**GENERAL MAINTENANCE OF TRAFFIC (CONTINUED)**

All equipment and vehicles entering and exiting the work area shall display a flashing amber light visible from all directions at a minimum distance of ¼ mile.

The Contractor shall provide documentation that all breakaway sign supports comply with FHWA NCHRP 350 and/or MASH crash-worthy requirements.

**RESTORATION OF DISTURBED AREAS**

Areas disturbed as a result of the work necessary to repair guardrail shall be reshaped and/or restored to the satisfaction of the Engineer. The disturbed areas shall be tilled to a minimum depth of three inches and seeded with the following seed mix rate:

| Grass Species | Variety | Pure Live Seed (PLS) (Pounds/Acre) |
|---|---|---|
| Western Wheatgrass | Flintlock, Rodan, Rosana | 16 |
| Canada Wildrye | Mandan | 2 |
| | Total: | 18 |

All costs for reshaping, leveling, tilling, and seeding disturbed areas shall be incidental to the various bid items on the project.

**GUARDRAIL**

1. When guardrail adjoining bridge ends is ordered to be repaired, the contractor shall replace with the same size and type as the existing guardrail. Post spacing will be in accordance with current specifications. See Standard Plates for post spacing requirements.

2. When a W Beam guardrail end terminal is replaced, the new end terminal shall be of the same type (flared or tangent) that was originally installed.

3. Beam Guardrail Post and Block, Winter - Includes the additional cost for removal and installation of a Beam Guardrail Wood Post and Block when there is at least one foot of solid frozen ground at the work site. This bid item shall be an additional payment. (i.e. the Contractor will be paid once for the respective Beam Guardrail Post and Block bid item and once for Beam Guardrail Post and Block, Winter for each post when the Engineer determines winter conditions apply).

4. 3 Cable Guardrail Post, Winter - Includes the additional costs for removal and installation of a 3 Cable I Beam Steel and 3 Cable Flanged Channel Post when there is in excess of one foot of solid frozen ground at the work site. This bid item shall be an additional payment. (i.e. the Contractor will be paid once for the respective 3 Cable Guardrail Post bid item and once for 3 Cable Guardrail Post, Winter for each post when the Engineer determines winter conditions apply).

5. All reset portions of W & Thrie Beam Guardrail sections shall include the removal of wood guardrail posts and resetting these posts to the proper alignment with the Steel beam Guardrail. Payment for this work will be the same for frozen or unfrozen ground.

**GUARDRAIL (CONTINUED)**

6. Repair 3 Cable Guardrail – Includes all costs for replacing and repairing damaged cable, realigning posts, and the tensioning of the three cable guardrail. Payment for this item is applicable only when the cable is replaced, broken cable repaired, or the existing cable rail required realigning and retensioning.

7. "3 Cable Guardrail Intermediate Post" includes all costs to furnish and install either I Beam or Flanged type of posts. The post for this item shall be furnished and installed consistent with the type of posts presently in place at the proposed repair site.

8. "Beam Guardrail Post and Block" shall include all costs to furnish and install the appropriate size wood block. The Engineer shall designate the proper post length of six, six and one-half, or seven feet as needed to fit the repair situation.

9. W Beam Guardrail Breakaway Cable Terminal will be repaired only when they are behind 3 Cable Guardrail. W Beam Guardrail Breakaway Cable Terminal - Includes the costs of removing damaged components of the BCT System, furnishing and installing new Wood Breakaway End Posts (2), W Beam End Section (Buffer) 11” ± radius, related items and all hardware to attach same. Any other BCT items that are required will be paid for at invoice cost plus shipping, taxes and ten percent for profit.

10. W Beam Guardrail BCT’s or MELT’s that are damaged and are not behind 3 Cable guardrail will be replaced with a new W Beam Guardrail End Terminal. Approved products are available at the following web address. http://apps.sd.gov/Applications/HC54ApprovedProducts/main.asp

11. The Contractor may be required to furnish some items that are not listed in the Contract Proposal. The Contractor shall furnish the invoice and will be paid invoice cost plus shipping, handling, taxes and 10 percent for profit. The Contractor is required to receive prior approval of the Engineer before making these purchases. Installation cost for these items shall be incidental to the contract unit prices for the various items.

12. The Contractor shall place “State Furnished Asphalt Concrete Cold Mix” around the posts to fill and level any voids created by the driving of the posts through the asphalt. This material will be available at the SDDOT maintenance in Rapid City. The material shall be placed ½” high around the post to force the water to drain away from the post. Cost for this work shall be incidental to the various bid items on the project.

13 All costs to furnish and install new bolts, nuts, washers, nails, misc. shall be incidental to the various bid items on the project. All removed guardrail items that are not reused shall become the property of the Contractor.

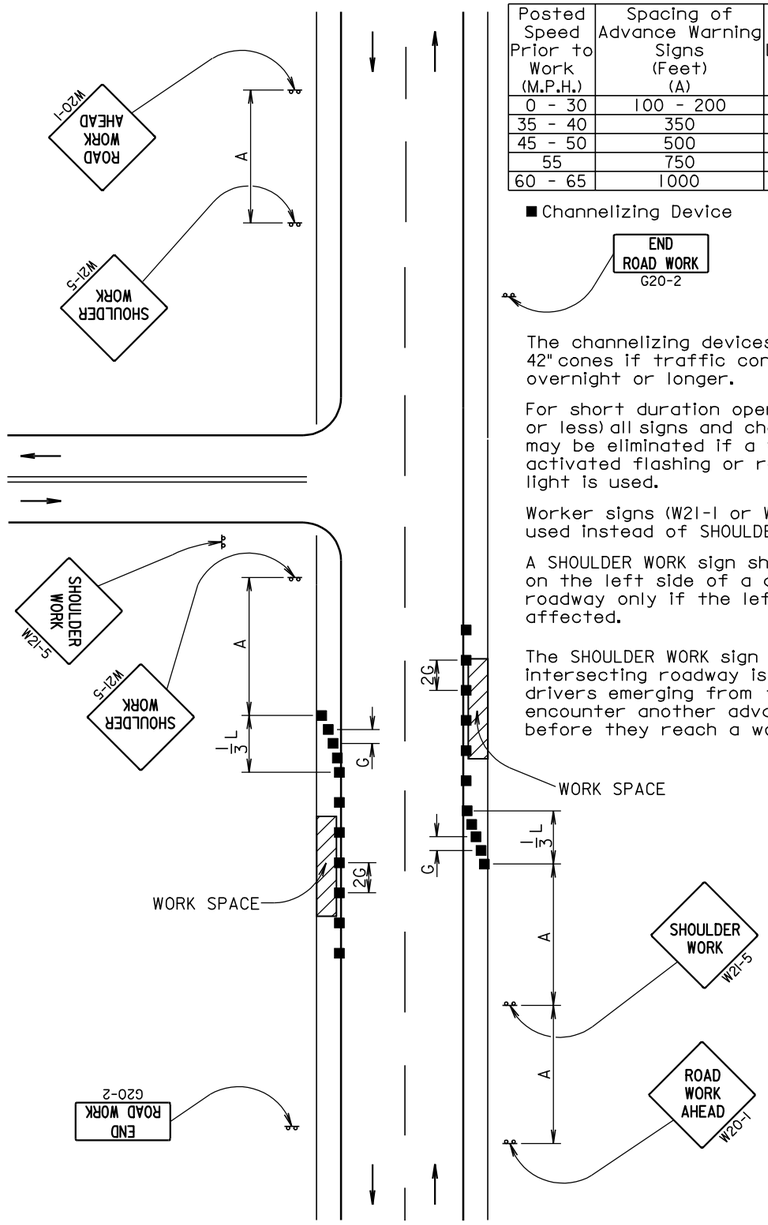


| Posted Speed Prior to Work (M.P.H.) | Spacing of Advance Warning Signs (Feet) (A) | Taper Length (Feet) (L) | Spacing of Channelizing Devices (Feet) (G) |
|---|---|---|---|
| 0 - 30 | 100 - 200 | 180 | 25 |
| 35 - 40 | 350 | 320 | 25 |
| 45 - 50 | 500 | 600 | 50 |
| 55 | 750 | 660 | 50 |
| 60 - 65 | 1000 | 780 | 50 |

■ Channelizing Device

END ROAD WORK G20-2

The channelizing devices shall be drums or 42" cones if traffic control must remain overnight or longer.

For short duration operations (1 hour or less) all signs and channelizing devices may be eliminated if a vehicle with an activated flashing or revolving yellow light is used.

Worker signs (W21-1 or W21-1a) may be used instead of SHOULDER WORK signs.

A SHOULDER WORK sign should be placed on the left side of a divided or one-way roadway only if the left shoulder is affected.

The SHOULDER WORK sign on an intersecting roadway is not required if drivers emerging from that roadway will encounter another advance warning sign before they reach a work activity area.

February 14, 2011

Published Date: 3rd Qtr. 2011

SDDOT

**GUIDES FOR TRAFFIC CONTROL DEVICES WORK ON SHOULDERS**

PLATE NUMBER 634.03

Sheet 1 of 1

| Posted Speed Prior to Work (M.P.H.) | Spacing of Advance Warning Signs (Feet) (A) | Spacing of Channelizing Devices (Feet) (G) |
|---|---|---|
| 0 - 30 | 200 | 25 |
| 35 - 40 | 350 | 25 |
| 45 - 50 | 500 | 50 |
| 55 | 750 | 50 |
| 60 - 65 | 1000 | 50 |

Flagger

■ Channelizing Device

For low-volume traffic situations with short work zones on straight roadways where the flagger is visible to road users approaching from both directions, a single flagger may be used.

The ROAD WORK AHEAD and the END ROAD WORK signs may be omitted for short duration operations (1 hour or less).

For tack and/or flush seal operations, when flaggers are not being used, the FRESH OIL sign (W21-2) shall be displayed in advance of the liquid asphalt areas.

Flashing warning lights and/or flags may be used to call attention to the advance warning signs.

The channelizing devices shall be drums or 42" cones.

Channelizing devices are not required along the centerline adjacent to work area when pilot cars are utilized for escorting traffic through the work area.

END ROAD WORK G20-2

Channelizing devices and flaggers shall be used at intersecting roads to control intersecting road traffic as required.

The buffer space should be extended so that the two-way traffic taper is placed before a horizontal or vertical curve to provide adequate sight distance for the flagger and queue of stopped vehicles.

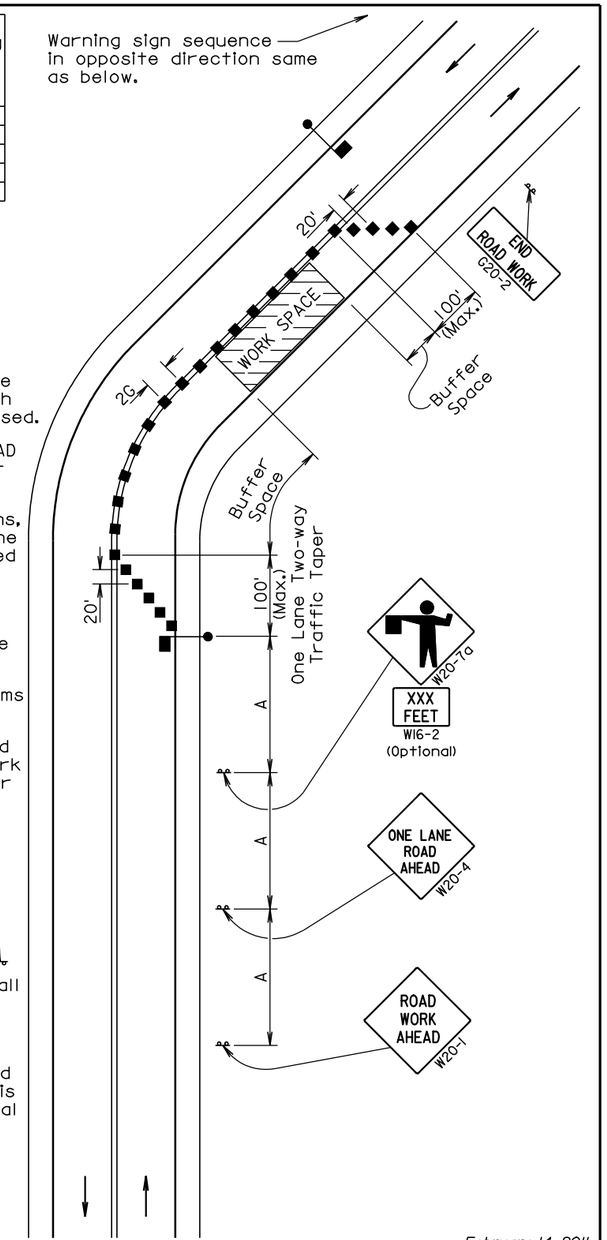


February 14, 2011

Published Date: 3rd Qtr. 2011

SDDOT

**GUIDES FOR TRAFFIC CONTROL DEVICES LANE CLOSURE WITH FLAGGER PROVIDED**

PLATE NUMBER 634.23

Sheet 1 of 1

Username - trrcil951

| Posted Speed Prior to Work (M.P.H.) | Spacing of Advance Warning Signs (Feet) (A) (B) (C) | Taper Length (Feet) (L) | Spacing of Channelizing Devices (Feet) (G) |
|---|---|---|---|
| 0 - 30 | 200 | 180 | 25 |
| 35 - 40 | 350 | 320 | 25 |
| 45 - 50 | 500 | 600 | 50 |
| 55 | 750 | 660 | 50 |
| 60 - 65 | 1000 | 780 | 50 |

■ Channelizing Device

The channelizing devices shall be drums or 42" cones if traffic control must remain overnight or longer. During daylight hours, 42" cones may be used in lieu of drums along the centerline.

Longitudinal dimensions may be adjusted to fit project conditions such as horizontal curves, vertical curves, and other site restrictions.

Four inch white temporary pavement marking shall be used if traffic control must remain overnight or longer.

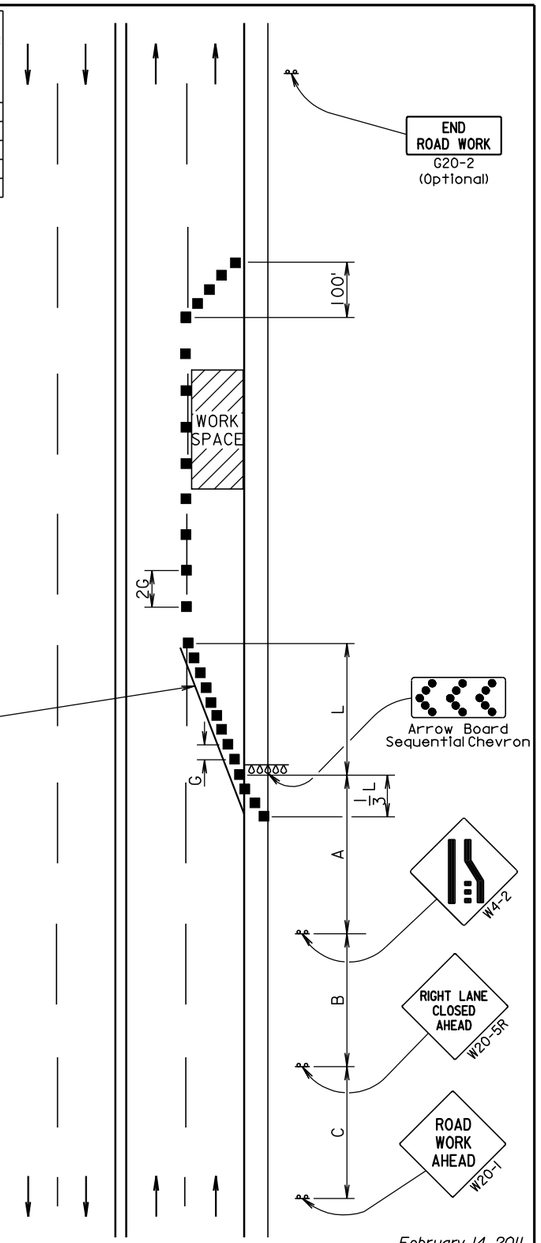


February 14, 2011

Published Date: 3rd Qtr. 2011

SDDOT

**GUIDES FOR TRAFFIC CONTROL DEVICES**
**4-LANE UNDIVIDED, RIGHT LANE CLOSED**

PLATE NUMBER 634.47

Sheet 1 of 1

# WITHOUT BARRIER

| Posted Speed Prior to Work (M.P.H.) | Spacing of Advance Warning Signs (Feet) (A) (B) (C) | Taper Length (Feet) (L) |
|---|---|---|
| 0 - 30 | 200 | 180 |
| 35 - 40 | 350 | 320 |
| 45 - 50 | 500 | 600 |
| 55 | 750 | 660 |
| 60 - 65 | 1000 | 780 |
| | | |
| | (A) (B) (C) | |
| 70 - 75 | 1000 1600 2600 | 900 |

| Posted Speed Prior to Work (M.P.H.) | Length of Longitudinal Buffer Space (Feet) |
|---|---|
| 20 | 35 |
| 25 | 55 |
| 30 | 85 |
| 35 | 120 |
| 40 | 170 |
| 45 | 220 |
| 50 | 280 |
| 55 | 335 |
| 60 | 415 |
| 65 | 485 |
| 70 | 535 |
| 75 | 585 |

| Posted Speed Prior to Work (M.P.H.) | Spacing of Channelizing Devices (Feet) (G) |
|---|---|
| 0 - 30 | 25 |
| 35 - 40 | 25 |
| 45 - 50 | 50 |
| 55 | 50 |
| 60 - 65 | 50 |
| 75 | 50 |

*Shall be used for overnight and long term operations.

This procedure also applies when work is being performed in the lane adjacent to the median on a divided highway. Under these conditions, LEFT LANE CLOSED signs and the corresponding LANE REDUCTION symbol signs shall be used.

■ Channelizing Device

Drums or Type II Barricades shall be used if required overnight.

42" cones may be used along centerline

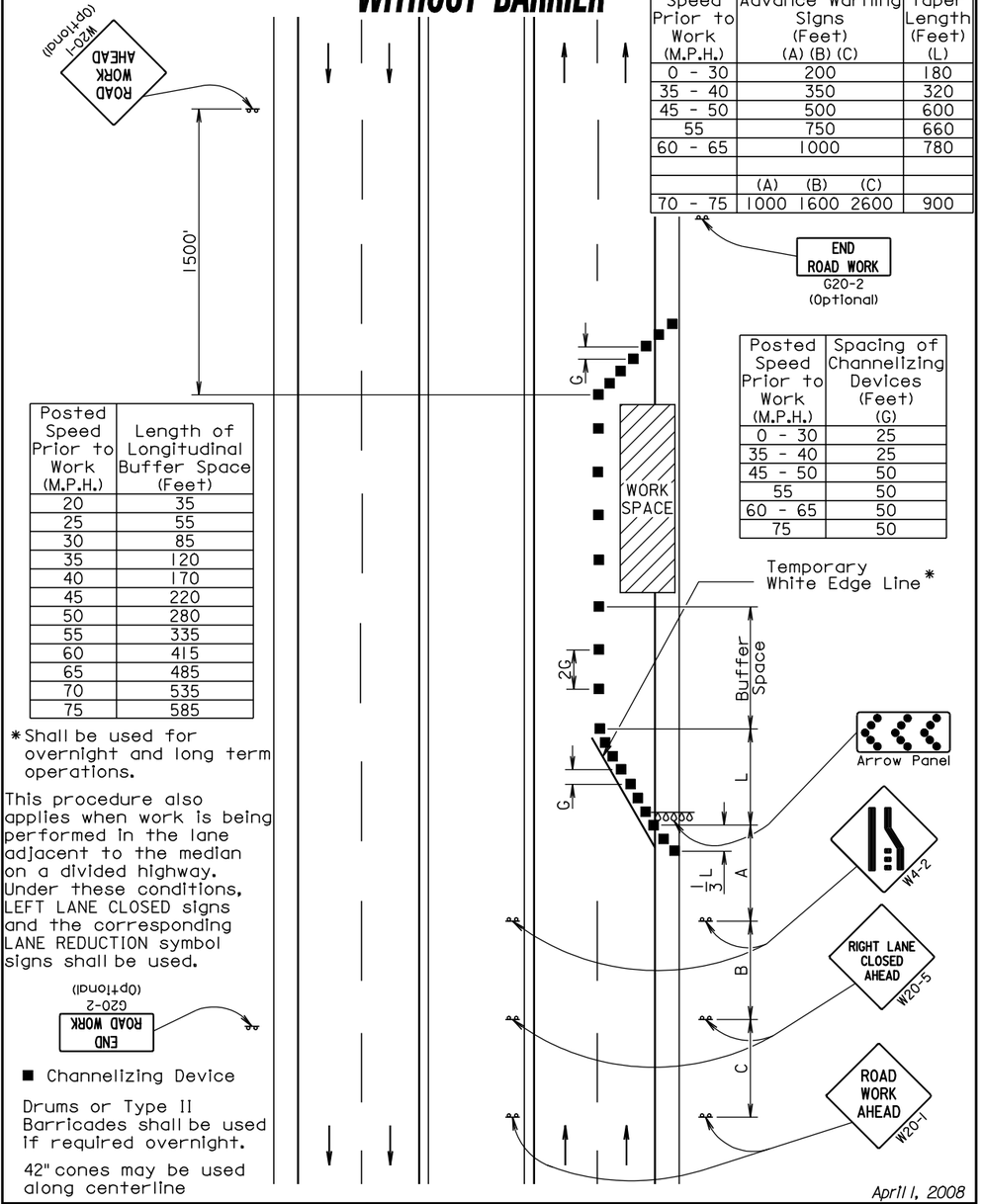


April 1, 2008

Published Date: 3rd Qtr. 2011

SDDOT

**GUIDES FOR TRAFFIC CONTROL DEVICES**
**LANE CLOSURE WITHOUT BARRIER**

PLATE NUMBER 634.64

Sheet 1 of 1

Username - trrcll951

Published Date: 3rd Qtr. 2011

SDDOT

3 CABLE GUARDRAIL

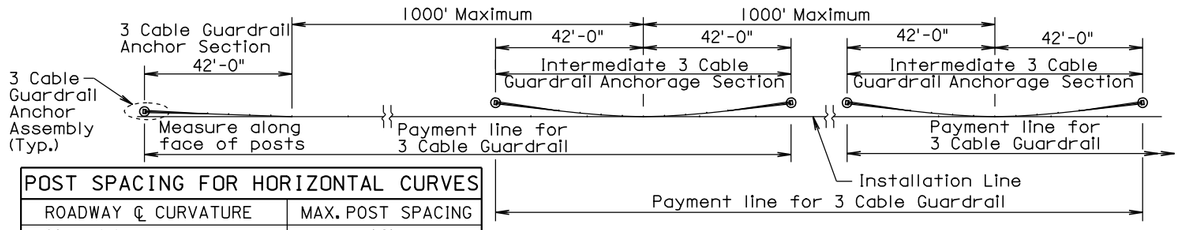


PLAN

| POST SPACING FOR HORIZONTAL CURVES | |
|---|---|
| ROADWAY ℄ CURVATURE | MAX. POST SPACING |
| 8° and Less | 16' |
| Greater than 8° to 13° | 12' |
| Greater than 13° | NOT ALLOWED |

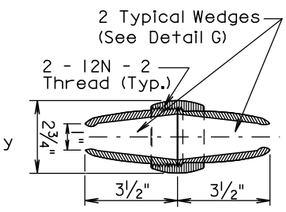


CABLE SPLICE

**GENERAL NOTES:**

Either flanged channel steel posts or S3x5.7 steel I beam posts shall be used, but post type shall be consistent thoughout the project. The S3x5.7 Steel I Beam post shall be used for the end posts when the flanged channel steel post is used as line posts.

All costs associated with furnishing and constructing the 3 cable guardrail anchor assembly including the concrete anchor, cable anchor bracket, compensating device, steel turnbuckle cable assembly, and necessary hardware shall be incidental to the contract unit price per Each for "3 Cable Guardrail Anchor Assembly".

All costs associated with furnishing and constructing the 3 cable guardrail including posts, cable, cable splices, and hardware shall be incidental to the contract unit price per Ft for "3 Cable Guardrail".

The following table and criteria shall apply to the arrangement of the Spring Cable End Assemblies (Compensation Devices) and Turnbuckle Cable End Assemblies:

| LENGTH OF CABLE RUN | CRITERIA FOR ARRANGEMENT OF THE SPRING CABLE END ASSEMBLIES (COMPENSATION DEVICES) AND TURNBUCKLE CABLE END ASSEMBLIES |
|---|---|
| To 500' | Use turnbuckle on the approaching traffic end and compensating device on the other end of each individual cable, except in the W Beam to 3 Cable Transition where all compensating devices shall be provided at the bridge ends. |
| Greater than 500' to 1000' | Use compensating device on each end of each individual cable. |
| Greater than 1000' | Start new run by interlacing at last parallel post as shown above. |

All Compensating Devices shall be attached to the cable anchor bracket when one end of the run is attached to a bridge.

Compensating Devices must have a spring rate of 450 ± 50 Lbs. per inch and shall have a total available travel of 6" minimum.

The cable shall be retensioned after the initial 2 week pretension period in accordance with the following table:

| Temperature Range (Deg.) | 120 to 110 | 109 to 100 | 99 to 90 | 89 to 80 | 79 to 70 | 69 to 60 | 59 to 50 | 49 to 40 | 39 to 30 | 29 to 20 | 19 to 10 | 9 to 0 | -1 to -10 | -11 to -20 |
|---|---|---|---|---|---|---|---|---|---|---|---|---|---|---|
| Spring Compression (In.) | 1 | 1¼ | 1½ | 1¾ | 2 | 2¼ | 2½ | 2¾ | 3 | 3¼ | 3½ | 3¾ | 4 | 4¼ |

December 23, 2010

PLATE NUMBER 629.01

Sheet 1 of 6

Published Date: 3rd Qtr. 2011

SDDOT

3 CABLE GUARDRAIL

TYPICAL INTERMEDIATE ANCHORAGE SECTION

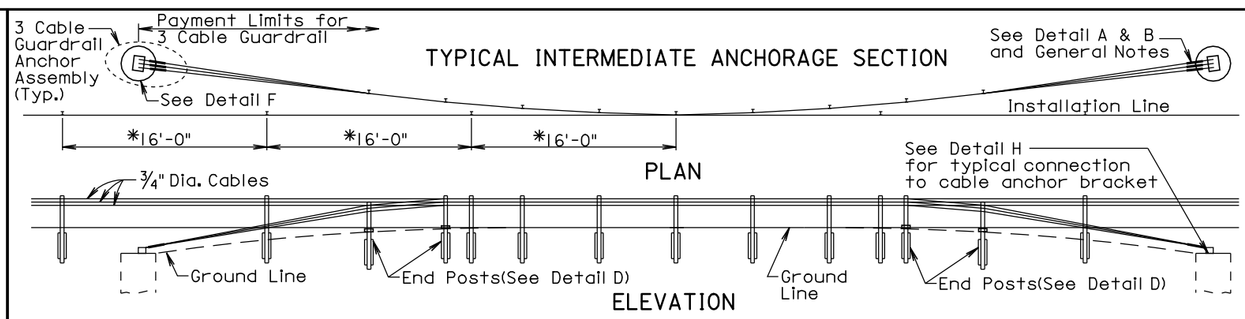


TYPICAL 3 CABLE GUARDRAIL ANCHOR SECTIONS

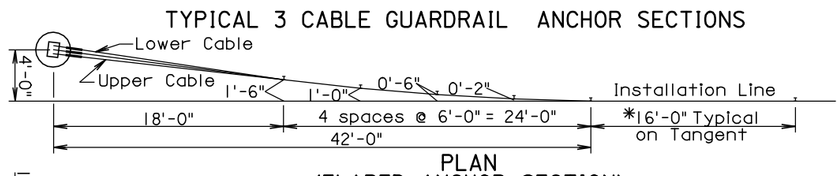


PLAN (FLARED ANCHOR SECTION)

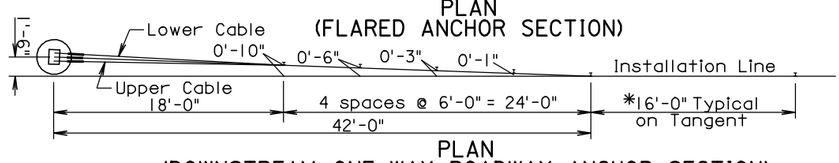


PLAN (DOWNSTREAM ONE WAY ROADWAY ANCHOR SECTION)

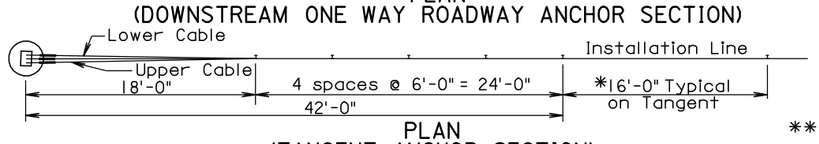


PLAN (TANGENT ANCHOR SECTION)

* See Table on Sheet 1 for post spacing on horizontal curves.

** See Standard Plate 630.98

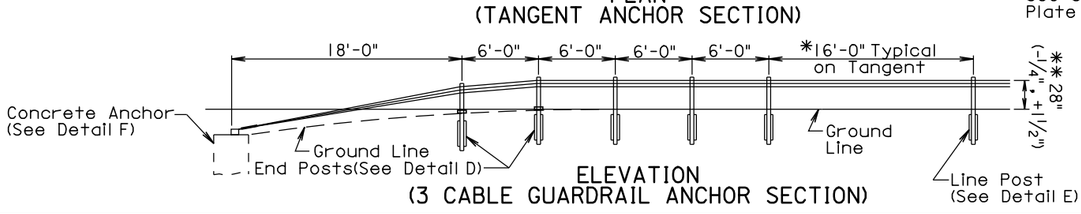


ELEVATION (3 CABLE GUARDRAIL ANCHOR SECTION)

December 23, 2010

PLATE NUMBER 629.01

Sheet 2 of 6

Plotting Date: 04-OCT-2011

| STATE OF SOUTH DAKOTA | PROJECT 0001-469 000N-469 000P-469 | SHEET 06 | TOTAL SHEETS 29 |
|---|---|---|---|

Username - trrcl1951

Published Date: 3rd Qtr. 2011

SDDOT

3 CABLE GUARDRAIL

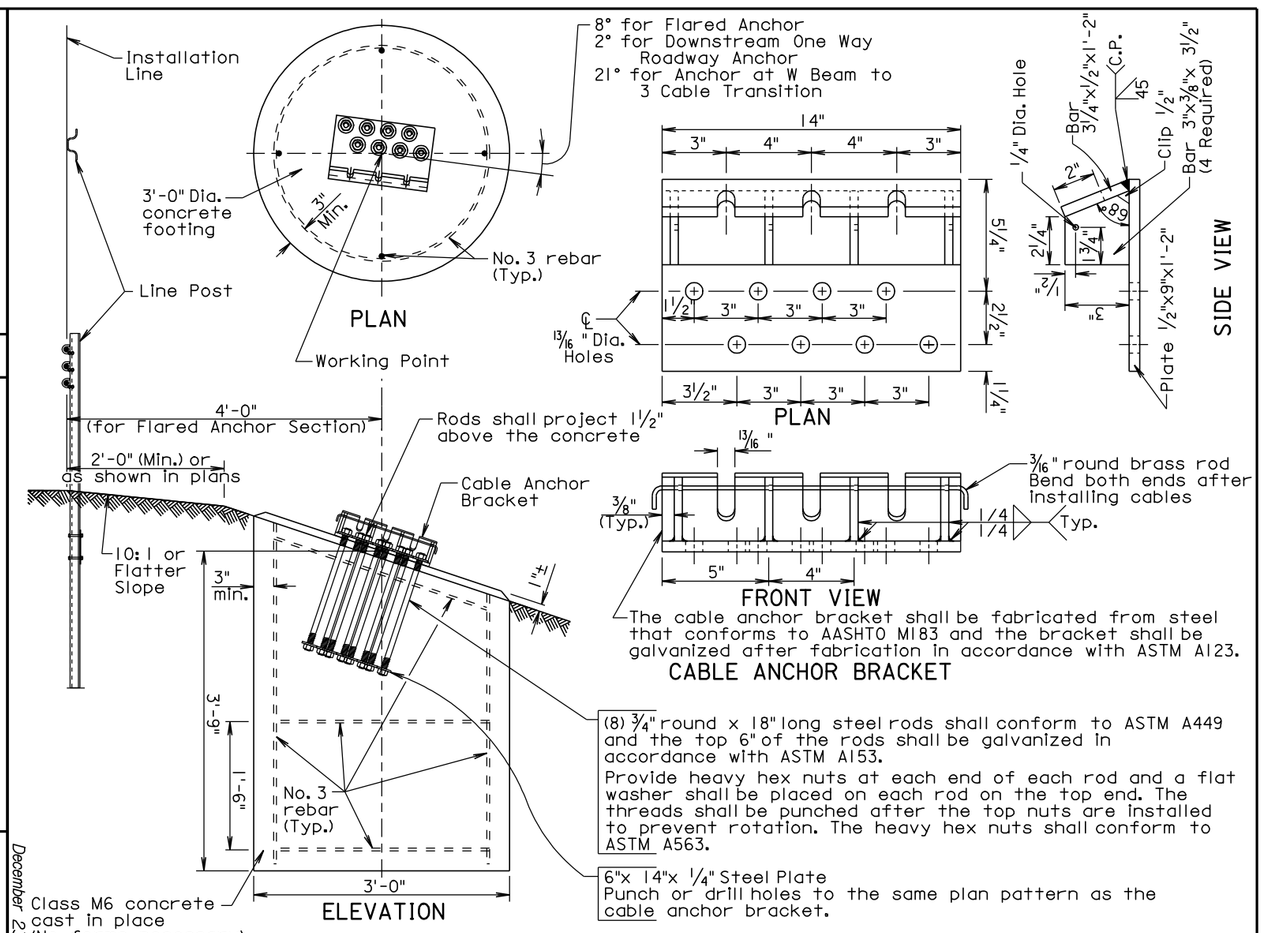


DETAIL F
(CONCRETE ANCHOR AND CABLE ANCHOR BRACKET)

December 23, 2010

PLATE NUMBER 629.01

Sheet 3 of 6

Published Date: 3rd Qtr. 2011

SDDOT

3 CABLE GUARDRAIL

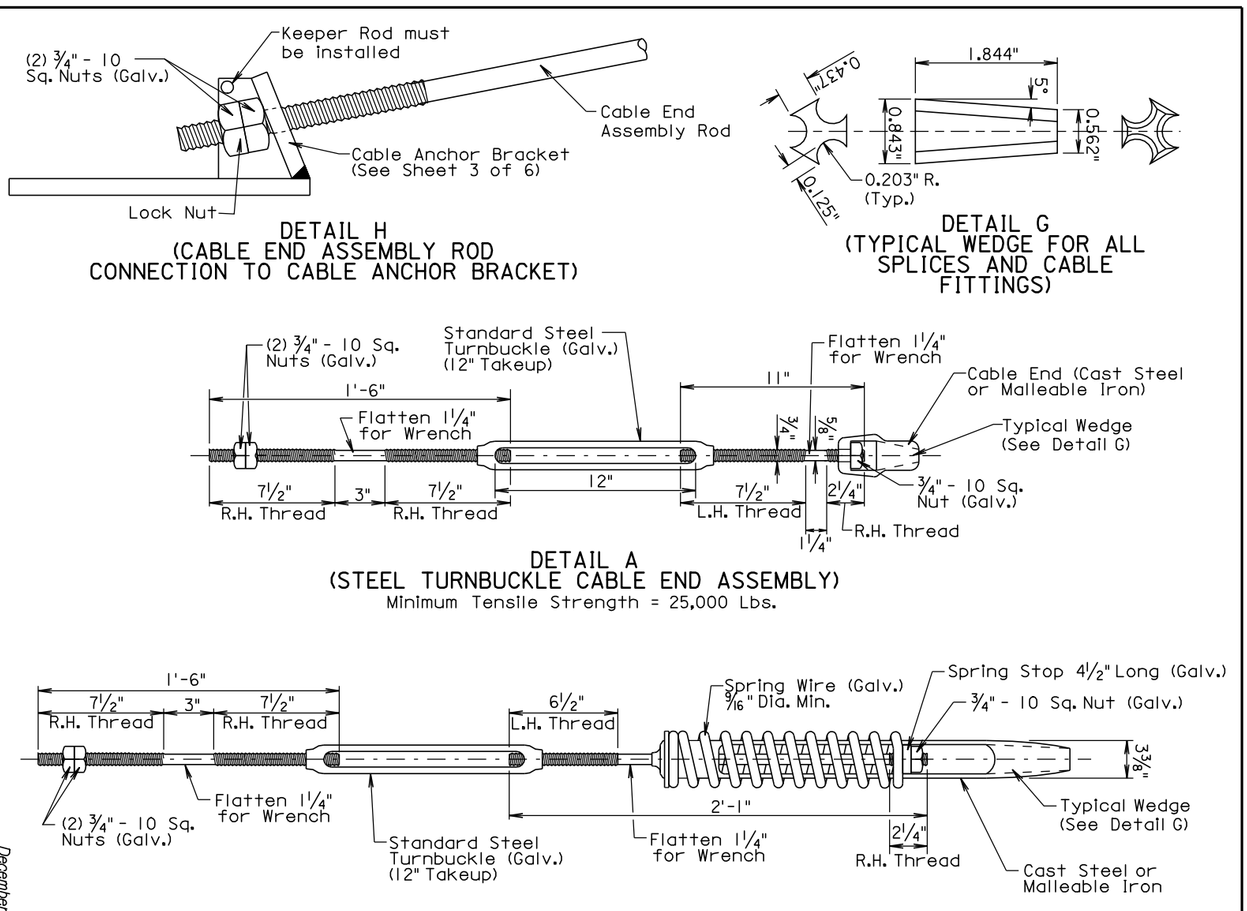


December 23, 2010

PLATE NUMBER 629.01

Sheet 4 of 6

| STATE OF SOUTH DAKOTA | PROJECT | SHEET | TOTAL SHEETS |
|---|---|---|---|
| | 0001-469<br>000N-469<br>000P-469 | 07 | 29 |

Plotting Date: 04-OCT-2011

Published Date: 3rd Qtr. 2011

S D D T O T

3 CABLE GUARDRAIL

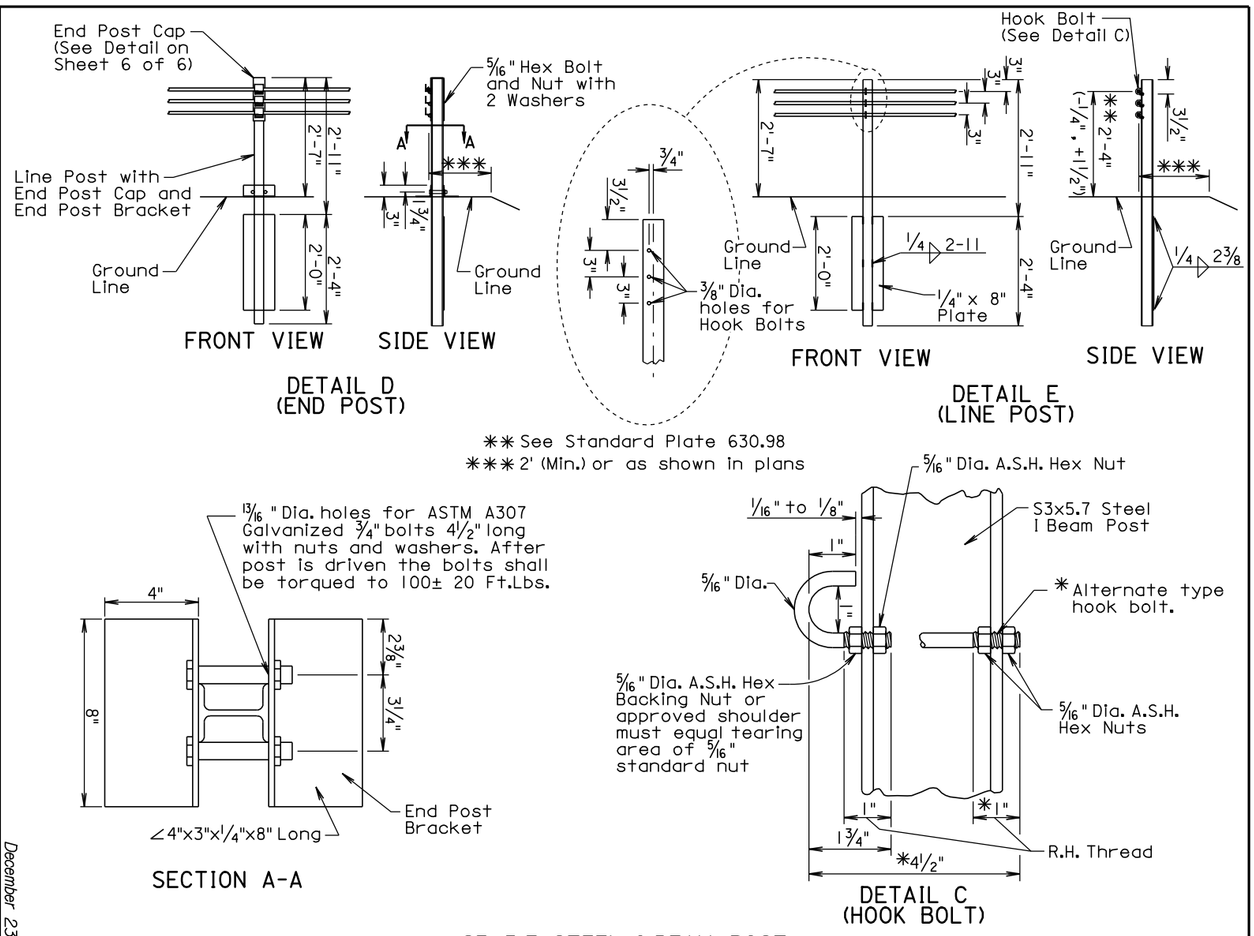


December 23, 2010

PLATE NUMBER 629.01

Sheet 5 of 6

Published Date: 3rd Qtr. 2011

S D D T O T

3 CABLE GUARDRAIL

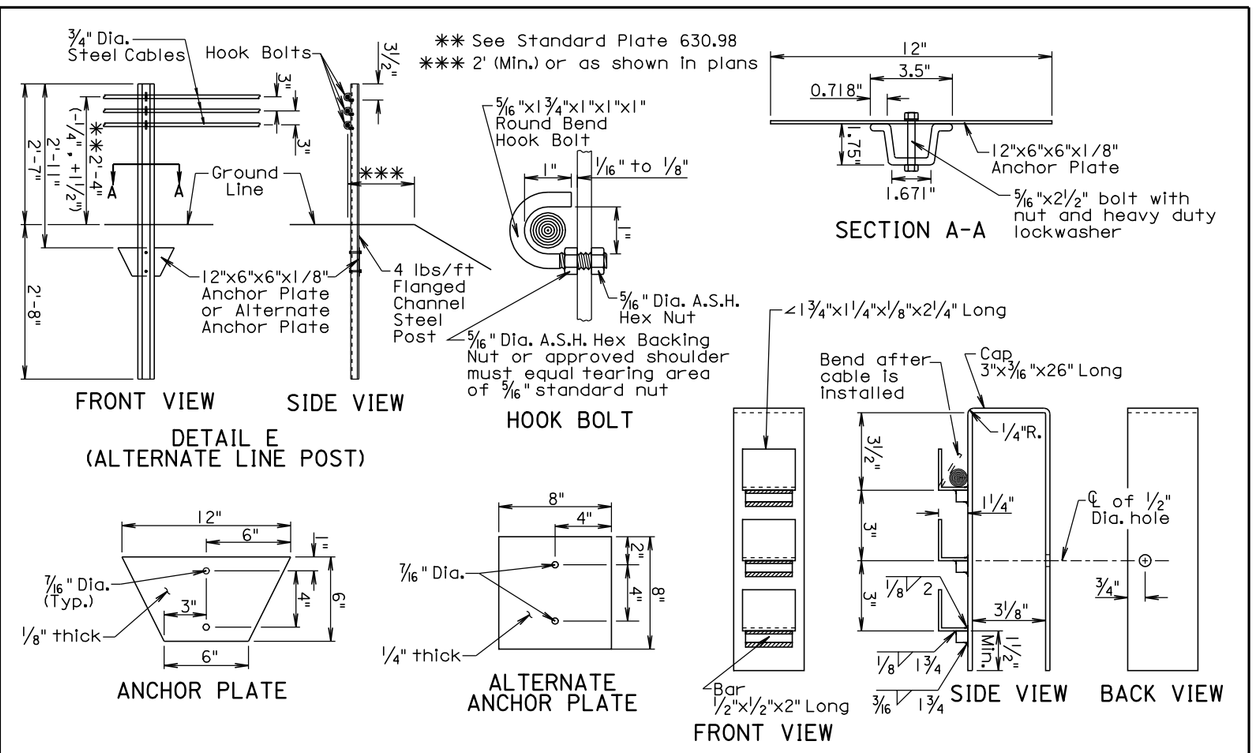


GENERAL NOTES:

Flanged channel steel posts shall be produced from high strength steel in accordance with ASTM A499 Grade 60.
Anchor plate shall be carbon steel sheet.
Alternate anchor plate shall be ASTM A36 steel.
Bolt shall be in conformance with ASTM A354 Grade BD or BC. Nut shall be in conformance with ASTM A563 Grade DH.
Bolt shall be Cadmium plated per ASTM A165-80 Type OS except using clear chromate.
Finish for the post and anchor plate shall be a high quality dark green outdoor acrylic enamel.
Alternate anchor plate may be unfinished.

December 23, 2010

PLATE NUMBER 629.01

Sheet 6 of 6

STATE OF SOUTH DAKOTA

PROJECT 0001-469 0000N-469 0000P-469

SHEET 08

TOTAL SHEETS 29

Plotting Date: 04-OCT-2011

Published Date: 3rd Qtr. 2011

SDDOT

# 3 CABLE GUARDRAIL POST SPACING FOR DEFLECTION CONTROL

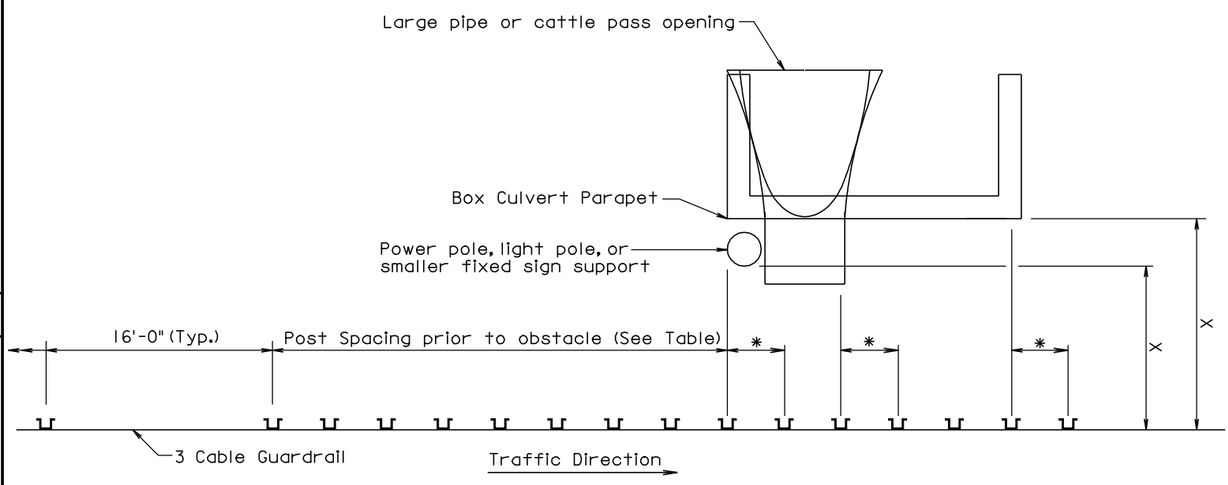


* Post spacings for control of deflection shall continue to one post past the obstacle for one way traffic. Post spacings for control of deflection shall be provided on both sides of the obstacle for two way traffic.

| X (Ft) | POST SPACING PRIOR TO OBSTACLE |
|---|---|
| 7.0 to 7.9 | 8 @ 4'-0" |
| 8.0 to 9.4 | 6 @ 8'-0" |
| 9.5 to 10.9 | 4 @ 12'-0" |
| 11.0 and Greater | 16'-0" (Typ.) |

**GENERAL NOTE:**

For illustrational purposes, the 3 cable guardrail posts and post spacings shown on this standard plate depict the situation when there is a box culvert 7' to 7.9' away from the 3 cable guardrail and the traffic is one way.

March 31, 2000

PLATE NUMBER 629.02

Sheet 1 of 1

Published Date: 3rd Qtr. 2011

SDDOT

# W BEAM TO 3 CABLE TRANSITION

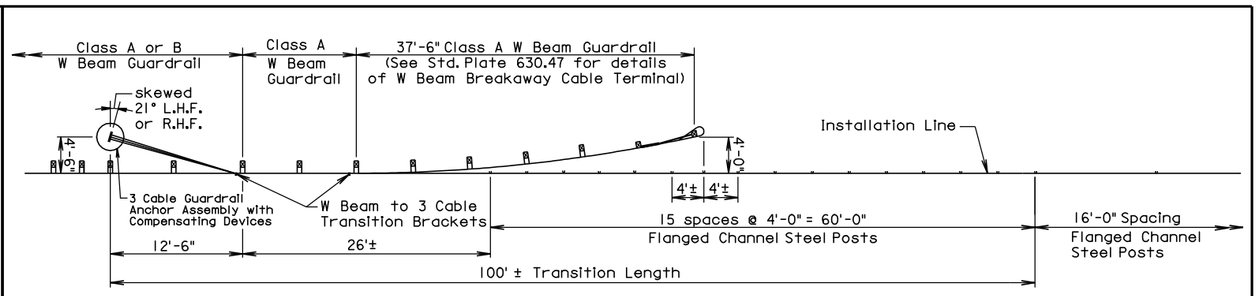


PLAN

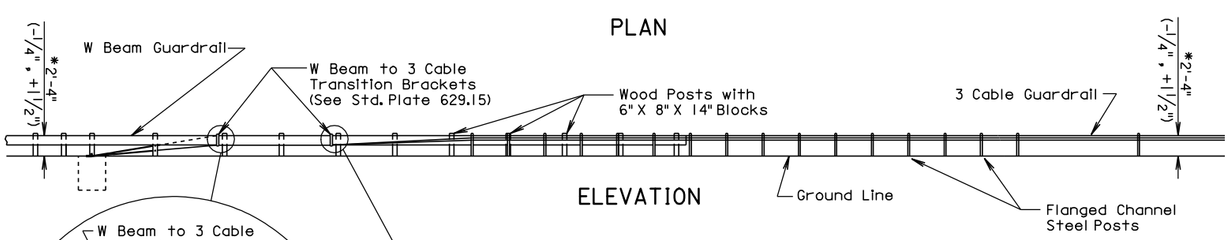


ELEVATION

* See Standard Plate 630.98

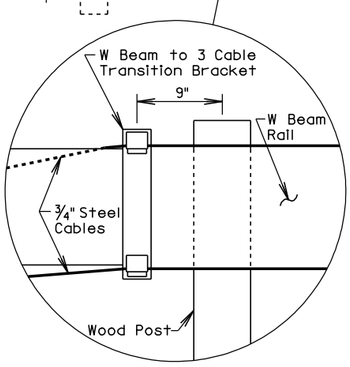


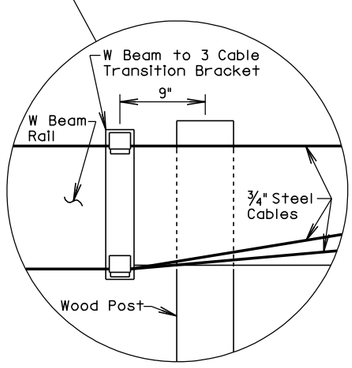


**GENERAL NOTES:**

Flanged channel steel posts are shown on this standard plate, however, S3 X 5.7 steel I beam posts may be substituted for the flanged channel steel posts.

All costs associated with furnishing and installing the W Beam to 3 Cable Transition Bracket shall be incidental to the contract unit price per Ft. for "3 Cable Guardrail", "Reset 3 Cable Guardrail", or "Reset 3 Cable Guardrail, Cable Only".

See Standard Plates 630.31, 630.32, and 630.33 for details and payment information for W Beam Guardrail.

See Standard Plate 629.01 for details and payment information for 3 Cable Guardrail.

December 23, 2010

PLATE NUMBER 629.05

Sheet 1 of 1

Plotting Date: 04-OCT-2011

| STATE OF SOUTH DAKOTA | PROJECT | SHEET | TOTAL SHEETS |
|---|---|---|---|
| | 0001-469<br>000N-469<br>000P-469 | 09 | 29 |

Published Date: 3rd Qtr. 2011

SDDOT

# 3 CABLE GUARDRAIL SLIP BASE ANCHOR ASSEMBLY

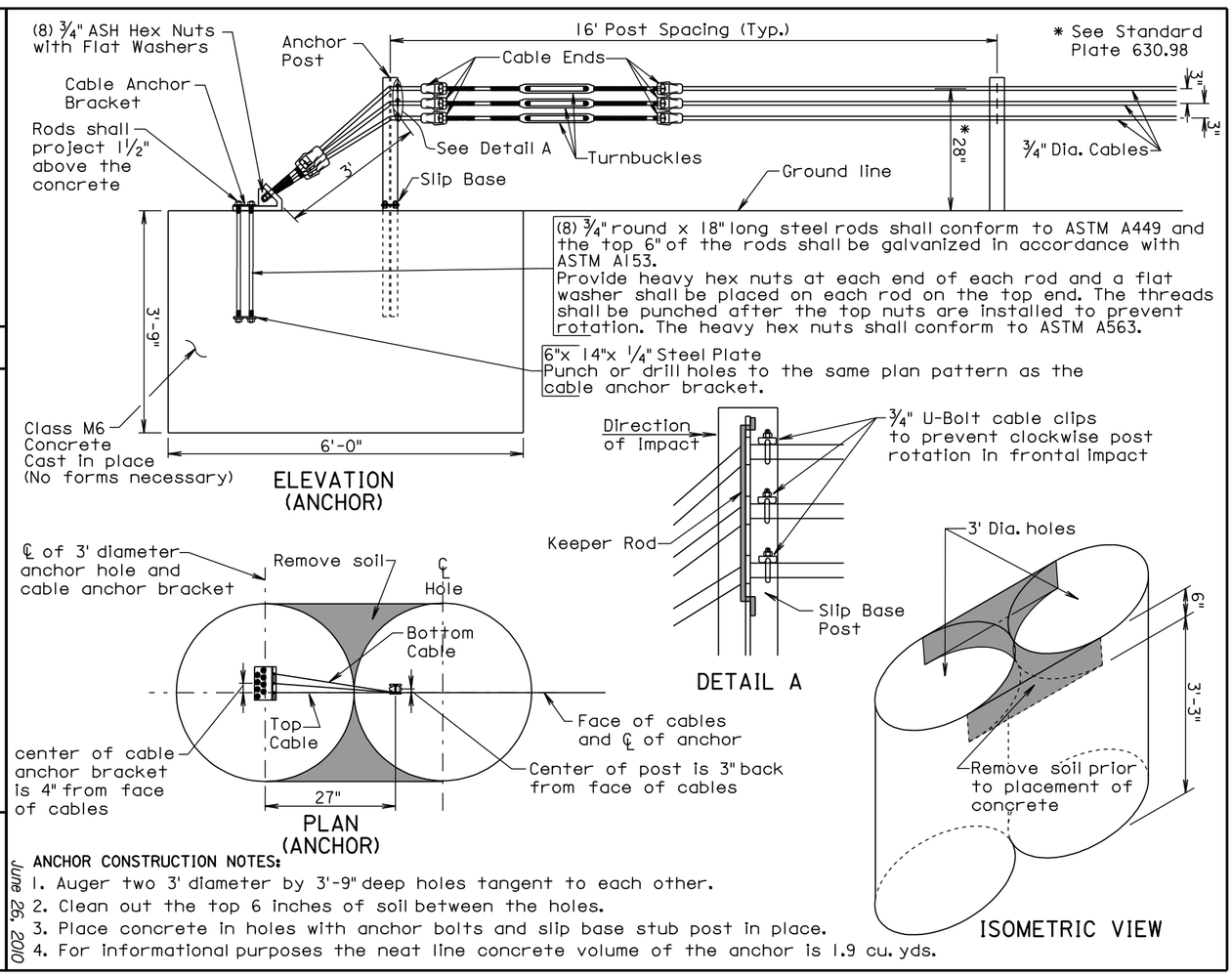


**ANCHOR CONSTRUCTION NOTES:**

1. Auger two 3' diameter by 3'-9" deep holes tangent to each other.
2. Clean out the top 6 inches of soil between the holes.
3. Place concrete in holes with anchor bolts and slip base stub post in place.
4. For informational purposes the neat line concrete volume of the anchor is 1.9 cu. yds.

PLATE NUMBER 629.10

Sheet 1 of 3

June 26, 2010

Published Date: 3rd Qtr. 2011

SDDOT

# 3 CABLE GUARDRAIL SLIP BASE ANCHOR ASSEMBLY

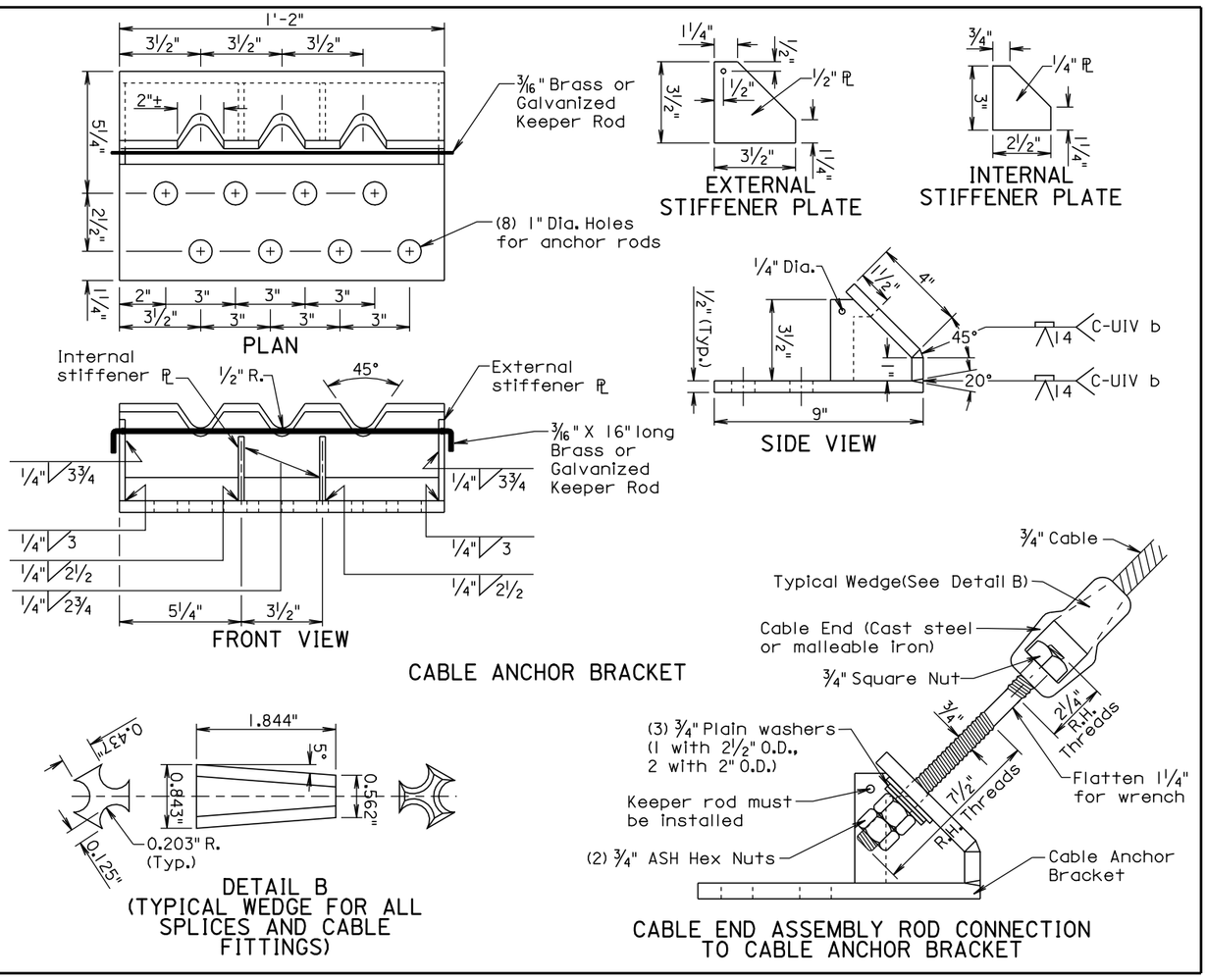


PLATE NUMBER 629.10

Sheet 2 of 3

June 26, 2010

Plotting Date: 04-OCT-2011

| STATE OF SOUTH DAKOTA | PROJECT | SHEET | TOTAL SHEETS |
|---|---|---|---|
| | 0001-469<br>000N-469<br>000P-469 | 10 | 29 |

Username - trrcl1951

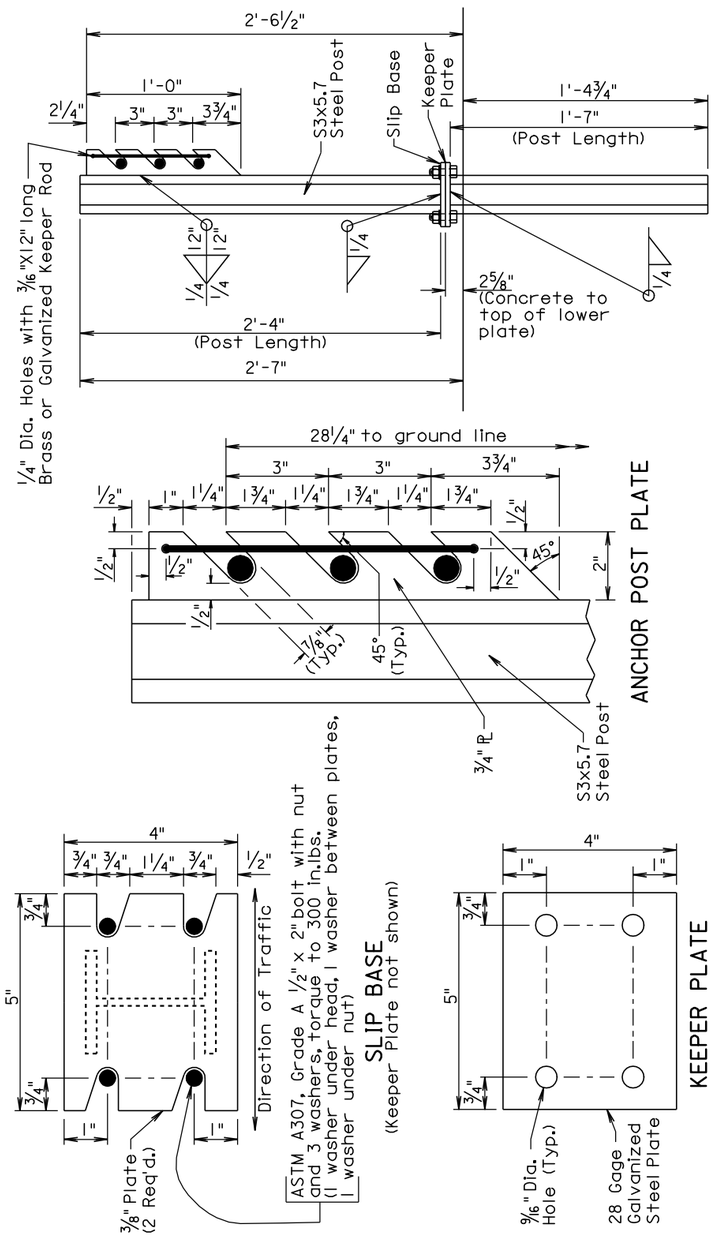


GENERAL NOTES:

Anchor post shall be a S3x5.7 rolled steel section. Post and plates shall conform to ASTM A36 and shall be galvanized in accordance with ASTM A123.

¾" round wire cable shall consist of three strands (7 wires per strand) and have a minimum tensile strength of 25,000 pounds.

Cast steel elements shall conform to AASHTO M103 (ASTM 27-73) grade U-60-30.

All costs associated with furnishing and constructing the 3 cable guardrail slip base anchor assembly including the concrete anchor, cable anchor bracket, anchor bolts, plates, slip base stub post, anchor post, steel turnbuckles, cable ends, U-bolt cable clips, and necessary hardware shall be incidental to the contract unit price per each for "3 Cable Guardrail Slip Base Anchor Assembly".

June 26, 2010

Published Date: 3rd Qtr. 2011

SDDOT

**3 CABLE GUARDRAIL SLIP BASE ANCHOR ASSEMBLY**

PLATE NUMBER 629.10

Sheet 3 of 3

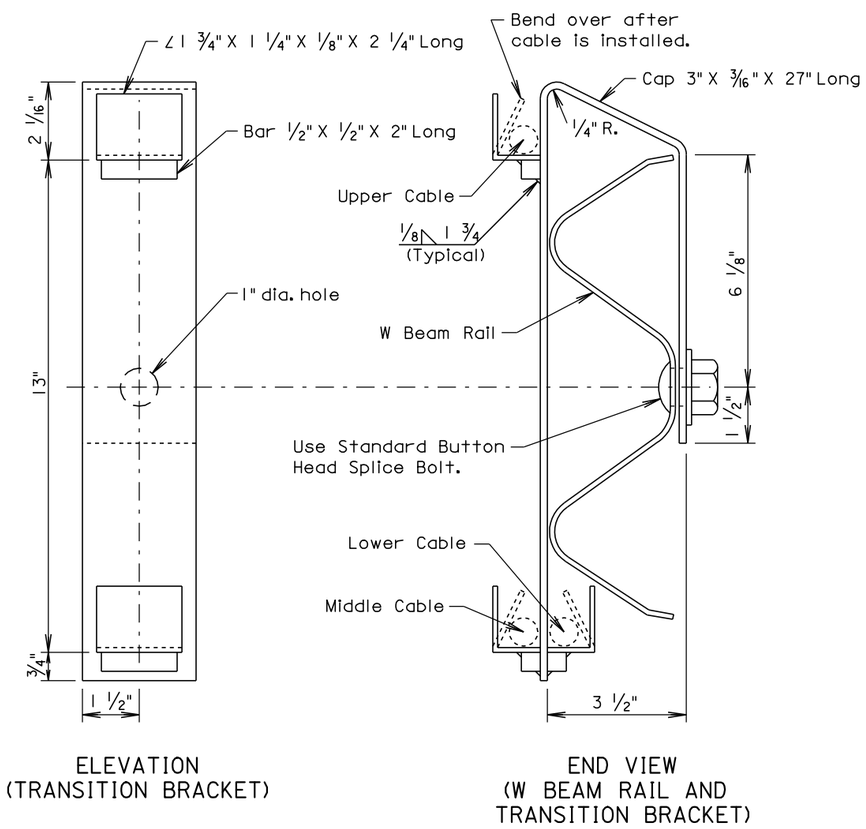


GENERAL NOTES:

Steel used in the fabrication of the bracket shall conform to ASTM A36 and the bracket shall be galvanized after fabrication in accordance with ASTM A123.

March 31, 2000

Published Date: 3rd Qtr. 2011

SDDOT

**W BEAM TO 3 CABLE TRANSITION BRACKET**

PLATE NUMBER 629.15

Sheet 1 of 1

Username - trrcll951

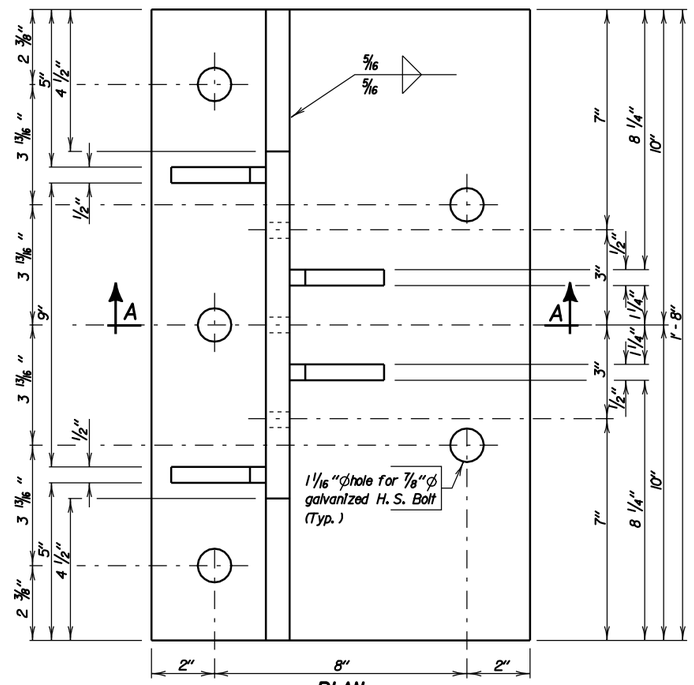


PLAN

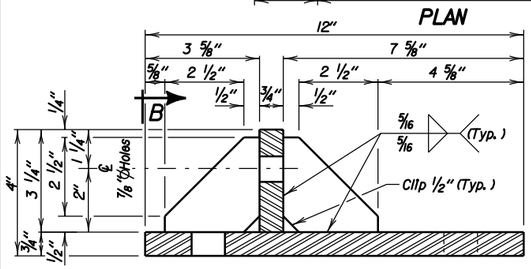


SEC. A - A

## GENERAL NOTES:

1. All steel shall conform to ASTM A709 Grade 36.
2. Welding and weld inspection shall be in conformance with AWS D1.1 (Current Year) Structural Welding Code - Steel.
3. After fabrication, galvanize in accordance with AASHTO M111 ( ASTM A123 ).
4. All Costs associated with furnishing and installing the 3 cable guardrail connection assembly shall be incidental to the contract unit price for the bid items "Class A45 Concrete, Bridge Deck", "Class A45 Concrete, Bridge Repair", or " 3 Cable Guardrail", as applicable.

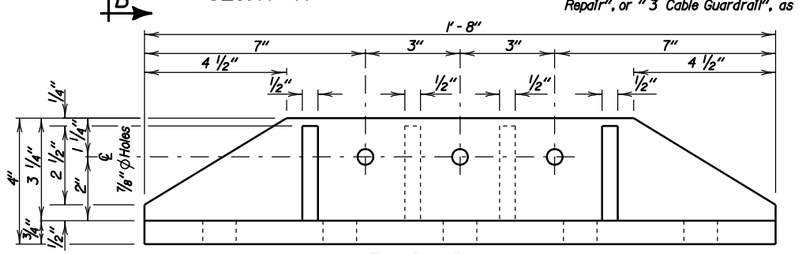


VIEW B - B

December 23, 2004

| Published Date: 3rd Qtr. 2011 | SDDOT | 3 CABLE GUARDRAIL CONNECTION ASSEMBLY | PLATE NUMBER 629.30 |
|---|---|---|---|
| | | | Sheet 1 of 1 |

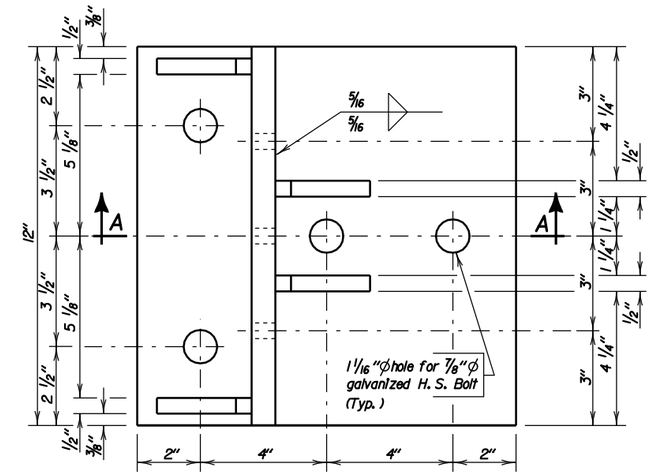


PLAN

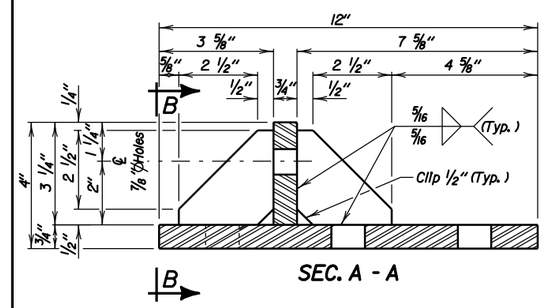


SEC. A - A

## GENERAL NOTES:

1. All steel shall conform to ASTM A709 Grade 36.
2. Welding and weld inspection shall be in conformance with AWS D1.1 (Current Year) Structural Welding Code - Steel.
3. After fabrication, galvanize in accordance with AASHTO M111 ( ASTM A123 ).
4. When required, provide 7/8"ϕx 2 1/2" high strength cap screws with heavy hex heads and plate washers. Cap screws shall conform to the requirements of ASTM A325 or A449. Washers shall be made of steel and meet the dimensional requirements of ANSI B27.2 Type A Plain Washers. Bolts and washers shall be galvanized in accordance with ASTM A153.
5. All Costs associated with furnishing and installing the 3 cable guardrail connection assembly shall be incidental to the contract unit price for the bid items "Class A45 Concrete, Bridge Deck", "Class A45 Concrete, Bridge Repair", or " 3 Cable Guardrail", as applicable.

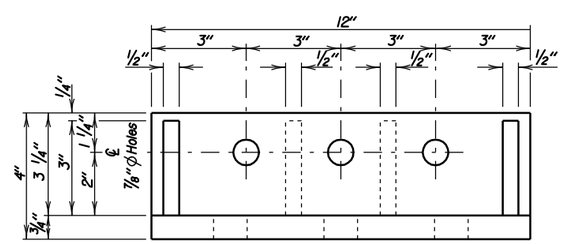


VIEW B - B

December 23, 2004

| Published Date: 3rd Qtr. 2011 | SDDOT | 3 CABLE GUARDRAIL CONNECTION ASSEMBLY | PLATE NUMBER 629.31 |
|---|---|---|---|
| | | | Sheet 1 of 1 |

Username - trrcll951

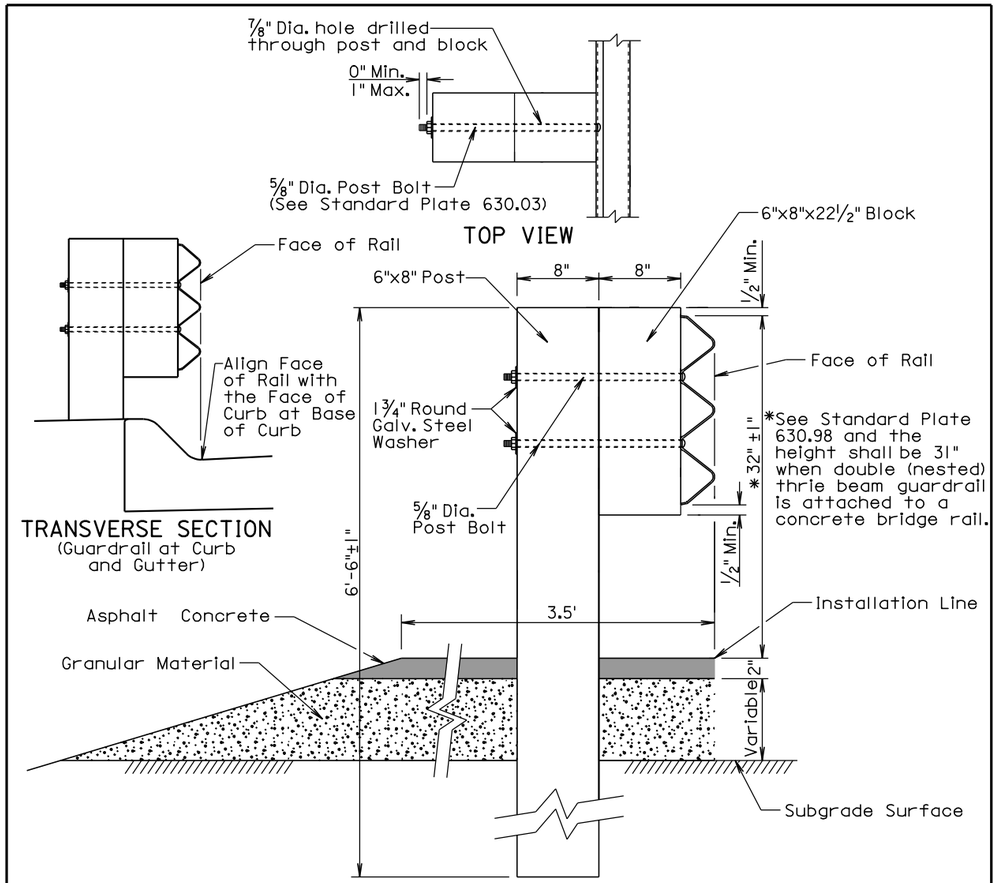


TRANSVERSE SECTION

**GENERAL NOTES:**

Asphalt concrete shall be the same type used elsewhere on the project or shall be as specified in the plans. If asphalt concrete is not specified in the plans, the asphalt concrete shall conform to the SD Standard Specifications for "Asphalt Concrete Composite." For informational purposes, the Rate of Materials for the 3.5' wide section of asphalt concrete as shown above shall be 4.80 Tons per Station.

Granular material shall be the same type used elsewhere on the project or shall be as specified in the plans. If granular material type is not specified in the plans, the material shall conform to the SD Standard Specifications for "Base Course". The granular material shall be placed the same thickness as the mainline surfacing or as specified in the plans.

Surfacing and embankment quantities will be paid for separately and will NOT be incidental to the "Thrie Beam Guardrail" bid item.

The cross slope for the surfacing and subgrade surface shall be as specified in the plans (See Typical Sections and/or Cross Sections).

The top of posts and top of block shall have a true square cut. The top of post and top of block shall be flush.

December 23, 2010

| Published Date: 3rd Qtr. 2011 | SDDOT | THRIE BEAM GUARDRAIL POST INSTALLATION | PLATE NUMBER 630.01 |
|---|---|---|---|
| | | | Sheet 1 of 1 |

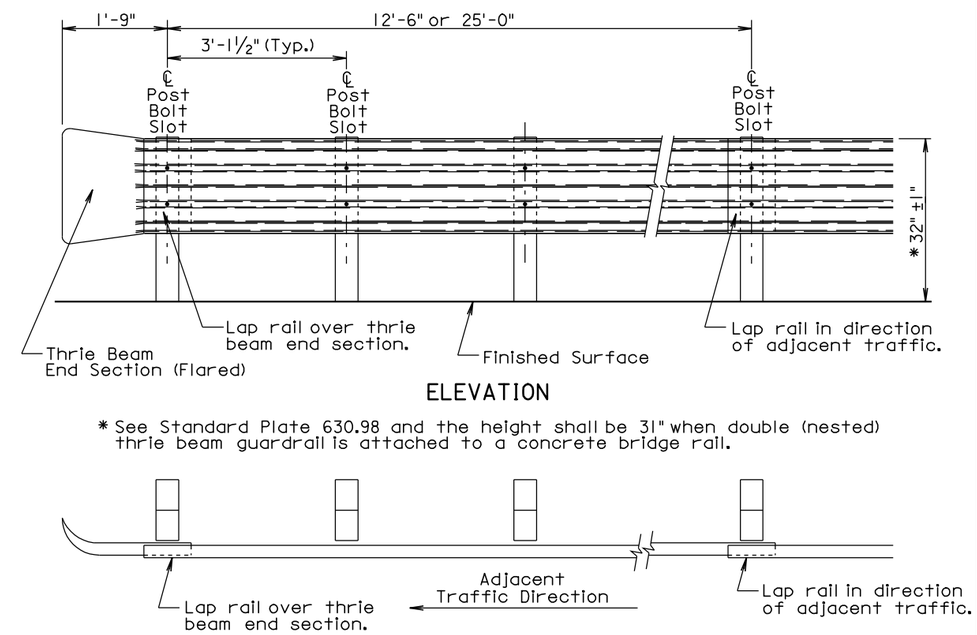


| THRIE BEAM GUARDRAIL DEFLECTION CRITERIA | |
|---|---|
| POST SPACING | MAXIMUM DEFLECTION |
| 6'-3" | 2'-6" |
| 3'-1 1/2" | 1'-9" |

For Informational Purposes Only

**GENERAL NOTES:**

All thrie beam rail shall be Type 1.

There will be no separate payment for furnishing and installing Thrie Beam End Sections (Flared) and Thrie Beam Terminal Connectors. All costs for the Thrie Beam End Sections (Flared) and Thrie Beam Terminal Connectors shall be incidental to the contract unit price per foot for the respective "Thrie Beam Guardrail" bid item.

Thrie beam rail section lengths may be 12'-6" and/or 25'-0". The combination of section lengths used shall be compatible with the total length of rail per site as shown in the plans.

Thrie Beam End Sections (Flared) shall only be used in a one way traffic situation. See Standard Plate 630.80 for Thrie Beam End Section (Flared) in the Beam Guardrail Trailing End Terminal.

All costs for constructing thrie beam guardrail including labor, equipment, and materials including all posts, blocks, steel beam rail, and hardware shall be incidental to the contract unit price per foot for the respective "Thrie Beam Guardrail" bid item.

Surfacing and embankment quantities will be paid for separately and will NOT be incidental to the "Thrie Beam Guardrail" bid item.

December 23, 2010

| Published Date: 3rd Qtr. 2011 | SDDOT | THRIE BEAM GUARDRAIL INSTALLATION | PLATE NUMBER 630.02 |
|---|---|---|---|
| | | | Sheet 1 of 1 |

Username - trrcll951

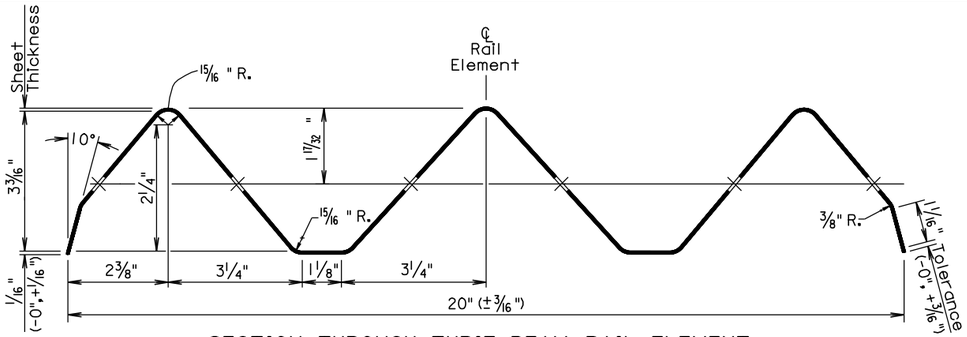


SECTION THROUGH THRIE BEAM RAIL ELEMENT

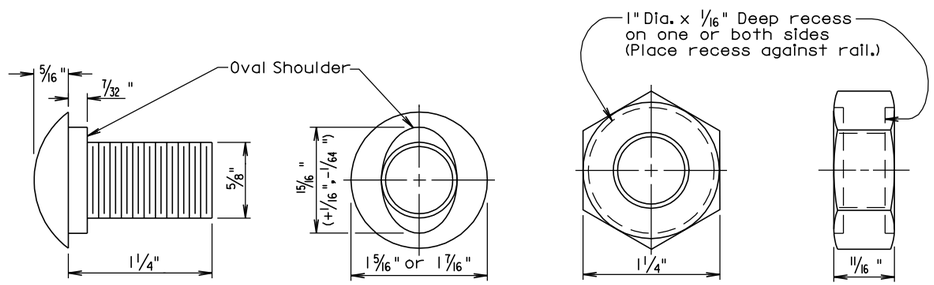


The Post Bolt is similar except the post bolt is 18" long.

SPLICE BOLT
(5/8" BUTTON HEAD BOLT AND RECESS NUT)

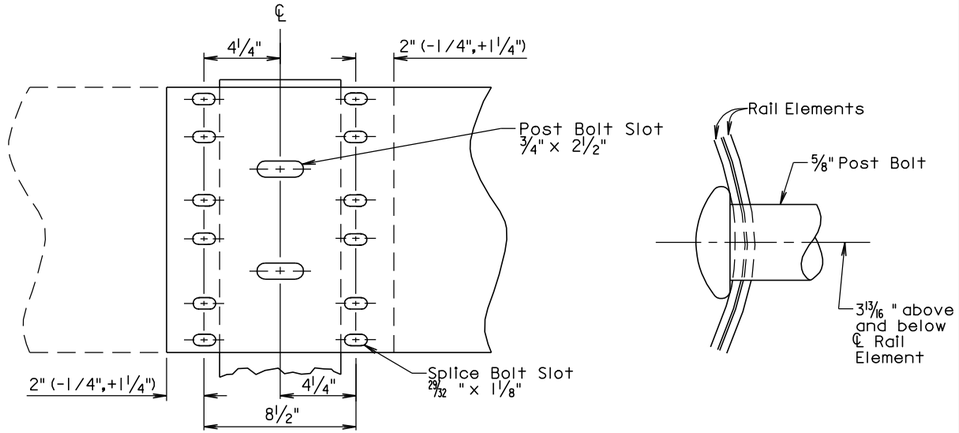


Lap in direction of traffic.

RAIL SPLICE

March 31, 2000

Published Date: 3rd Qtr. 2011

SDDOT

THRIE BEAM RAIL, RAIL SPLICE, AND HARDWARE

PLATE NUMBER 630.03

Sheet 1 of 1

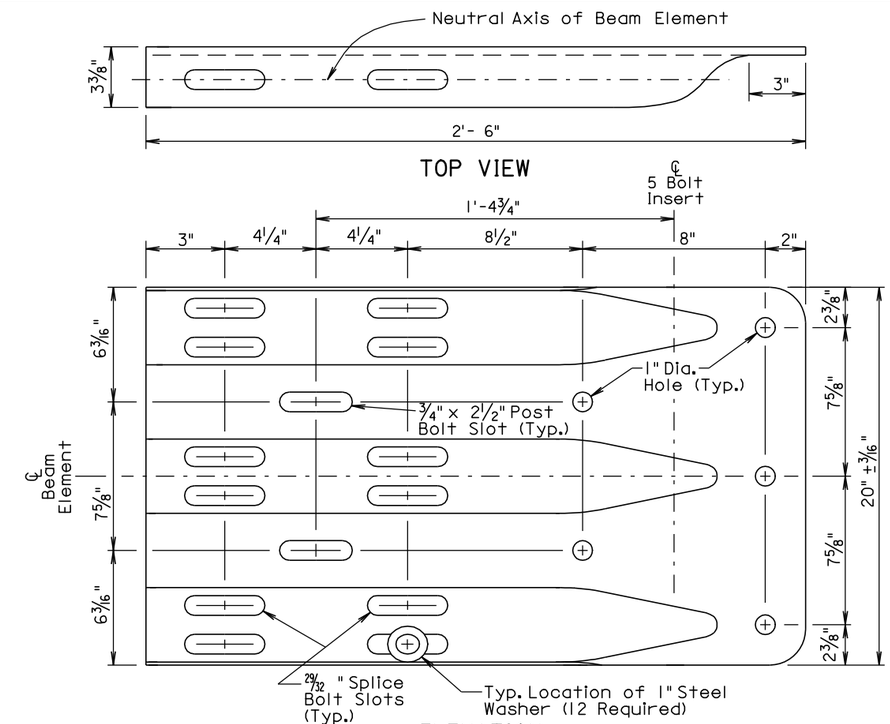


ELEVATION
THRIE BEAM TERMINAL CONNECTOR

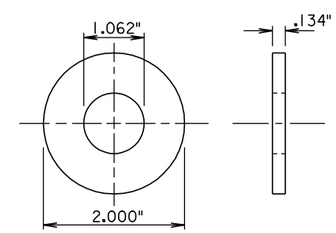


1" STEEL WASHER

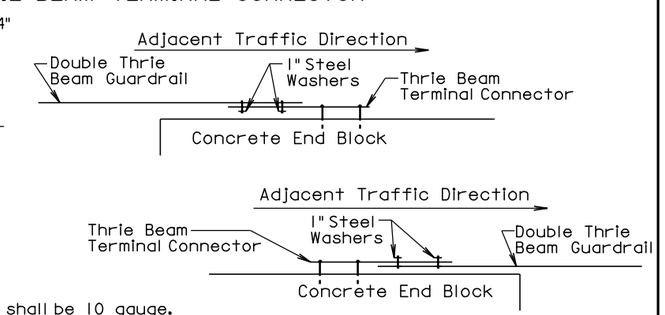


GENERAL NOTES:

Thrie Beam Terminal Connectors shall be 10 gauge.

When the thrie beam terminal connector is used to connect the rail to the bridge, 1" steel washers shall be used at the lap splice and the washers shall be in direct contact with the 3" slots of the thrie beam terminal connector. See the drawings above for the typical locations of the 1" steel washers.

There will be no separate payment for furnishing and installing the Thrie Beam Terminal Connector. All costs for the Thrie Beam Terminal Connector shall be incidental to the contract unit price per foot for the respective "Thrie Beam Guardrail" bid item.

September 14, 2001

Published Date: 3rd Qtr. 2011

SDDOT

THRIE BEAM TERMINAL CONNECTOR AND 1" STEEL WASHER

PLATE NUMBER 630.05

Sheet 1 of 1

Username - trrcll951

POST SPACING ARRANGEMENT FOR THRIE BEAM GUARDRAIL AT BRIDGE END

December 23, 2002

Published Date: 3rd Qtr. 2011

SDDOT

**POST SPACING ARRANGEMENT FOR THRIE BEAM GUARDRAIL AT BRIDGE END**

PLATE NUMBER 630.15

Sheet 1 of 1




POST SPACING ARRANGEMENT FOR THRIE BEAM GUARDRAIL AT BRIDGE END

March 31, 2000

Published Date: 3rd Qtr. 2011

SDDOT

**POST SPACING ARRANGEMENT FOR THRIE BEAM GUARDRAIL AT BRIDGE END (BRIDGE GUARDRAIL DESIGN 1T)**

PLATE NUMBER 630.20

Sheet 1 of 1

Username - trrcll951

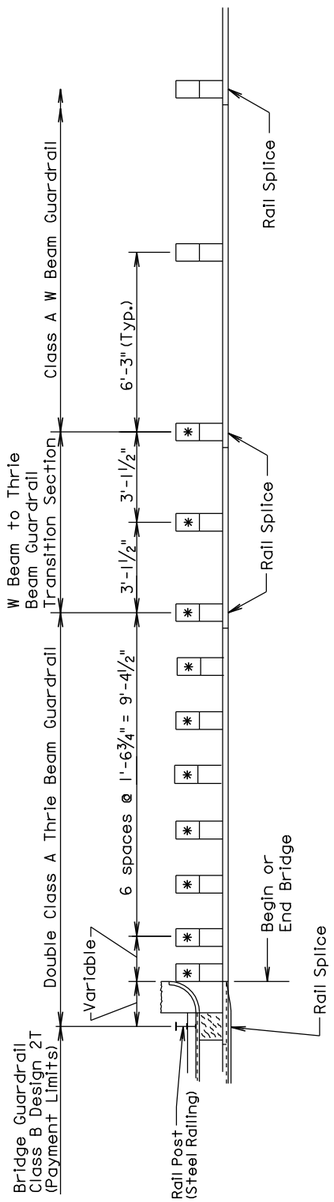


* 6" x 8" x 7' posts shall be used at these locations.

POST SPACING ARRANGEMENT FOR THRIE BEAM GUARDRAIL AT BRIDGE END

December 23, 2002

Published Date: 3rd Qtr. 2011

SDDOT

**POST SPACING ARRANGEMENT FOR THRIE BEAM GUARDRAIL AT BRIDGE END (BRIDGE GUARDRAIL DESIGN 2T)**

PLATE NUMBER 630.21

Sheet 1 of 1

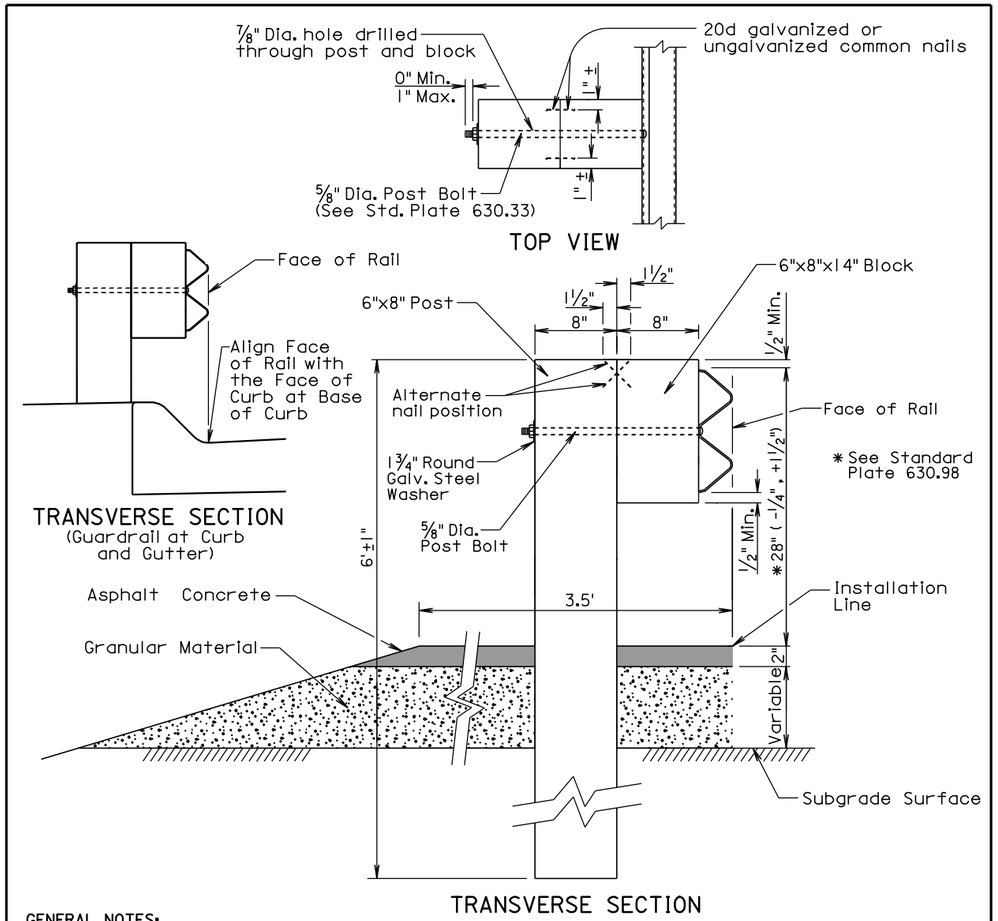


GENERAL NOTES:

Asphalt concrete shall be the same type used elsewhere on the project or shall be as specified in the plans. If asphalt concrete is not specified in the plans, the asphalt concrete shall conform to the SD Standard Specifications for "Asphalt Concrete Composite." For informational purposes, the Rate of Materials for the 3.5' wide section of asphalt concrete as shown above shall be 4.80 Tons per Station.

Granular material shall be the same type used elsewhere on the project or shall be as specified in the plans. If granular material type is not specified in the plans, the material shall conform to the SD Standard Specifications for "Base Course". The granular material shall be placed the same thickness as the mainline surfacing or as specified in the plans.

Surfacing and embankment quantities will be paid for separately and will NOT be incidental to the "W Beam Guardrail" bid item.

The cross slope for the surfacing and subgrade surface shall be as specified in the plans (See Typical Sections and/or Cross Sections).

The top of posts and top of block shall have a true square cut. The top of post and top of block shall be flush.

December 23, 2010

Published Date: 3rd Qtr. 2011

SDDOT

**W BEAM GUARDRAIL POST INSTALLATION**

PLATE NUMBER 630.31

Sheet 1 of 1

Username - trrcll951

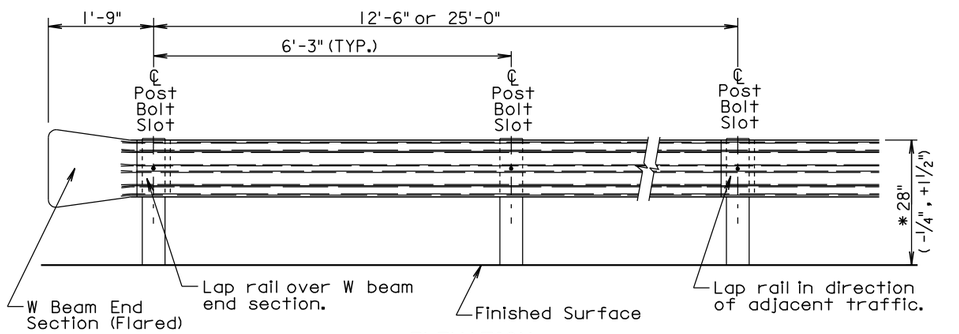


ELEVATION

*See Standard Plate 630.98

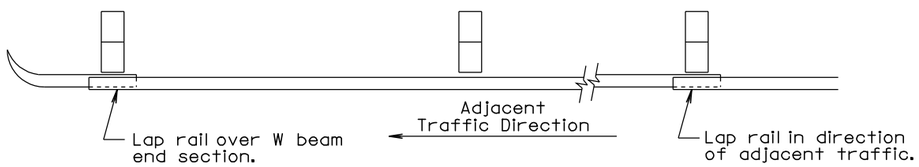


PLAN

| W BEAM GUARDRAIL DEFLECTION CRITERIA | |
|---|---|
| POST SPACING | MAXIMUM DEFLECTION |
| 6'-3" | 3'-3" |
| 3'-1 1/2" | 2'-0" |

For Informational Purposes Only

**GENERAL NOTES:**

All W beam rail shall be Type 1.

There will be no separate payment for furnishing and installing W Beam End Sections (Flared) and W Beam Terminal Connectors. All costs for the W Beam End Sections (Flared) and W Beam Terminal Connectors shall be incidental to the contract unit price per foot for the respective "W Beam Guardrail" bid item.

W beam rail section lengths may be 12'-6" and/or 25'-0". The combination of section lengths used shall be compatible with the total length of rail per site as shown in the plans.

W Beam End Sections (Flared) shall only be used in a one way traffic situation. See Standard Plate 630.80 for W Beam End Section (Flared) in the Beam Guardrail Trailing End Terminal.

All costs for constructing W beam guardrail including labor, equipment, and materials including all posts, blocks, steel beam rail, and hardware shall be incidental to the contract unit price per foot for the respective "W Beam Guardrail" bid item.

Surfacing and embankment quantities will be paid for separately and will NOT be incidental to the "W Beam Guardrail" bid item.

*December 23, 2010*

| Published Date: 3rd Qtr. 2011 | SDDOT | W BEAM GUARDRAIL INSTALLATION | PLATE NUMBER 630.32 |
|---|---|---|---|
| | | | Sheet 1 of 1 |

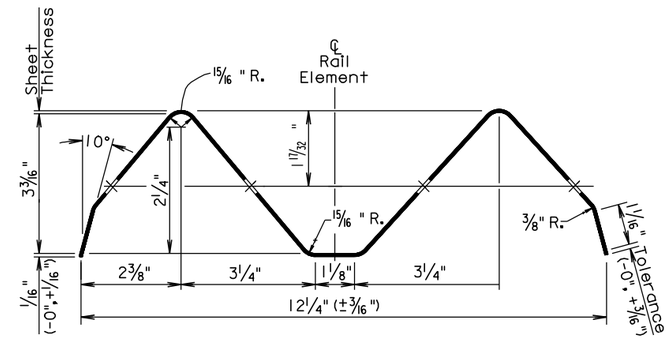


SECTION THROUGH W BEAM RAIL ELEMENT

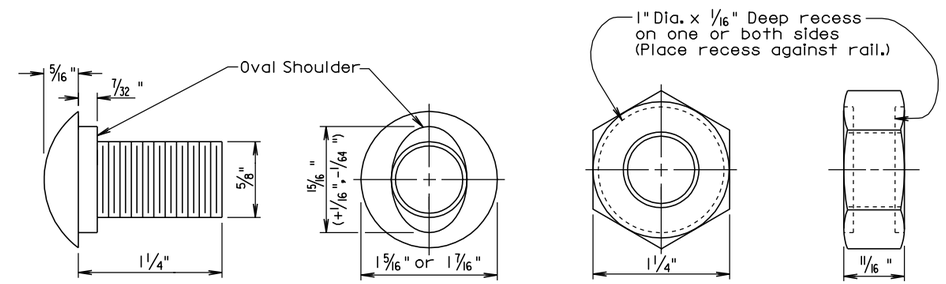


The Post Bolt is similar except the post bolt is 18" long.

SPLICE BOLT
(5/8" BUTTON HEAD BOLT AND RECESS NUT)

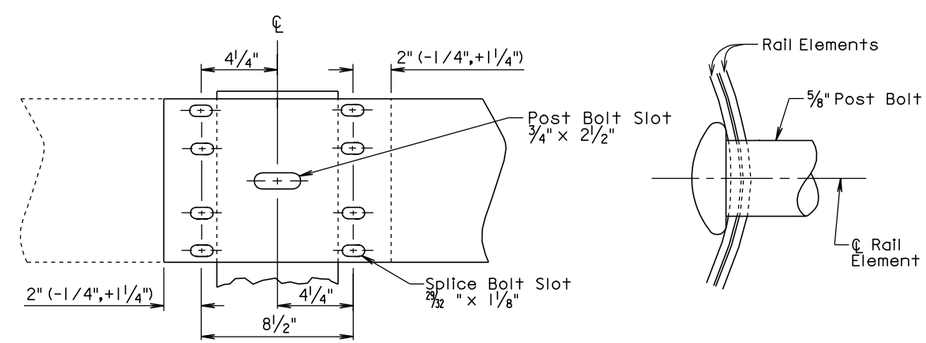


Lap in direction of traffic.

RAIL SPLICE

*December 23, 2004*

| Published Date: 3rd Qtr. 2011 | SDDOT | W BEAM RAIL, RAIL SPLICE, AND HARDWARE | PLATE NUMBER 630.33 |
|---|---|---|---|
| | | | Sheet 1 of 1 |

Username - trrcil951

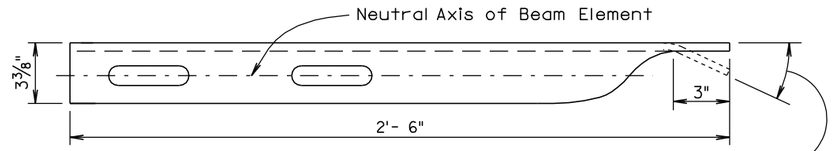


An extra hole and an approximate 26° bend shall be required only for the Breakaway Cable Terminal. The Modified W Beam Terminal Connector placement detail is shown on Standard Plate 630.47.

TOP VIEW

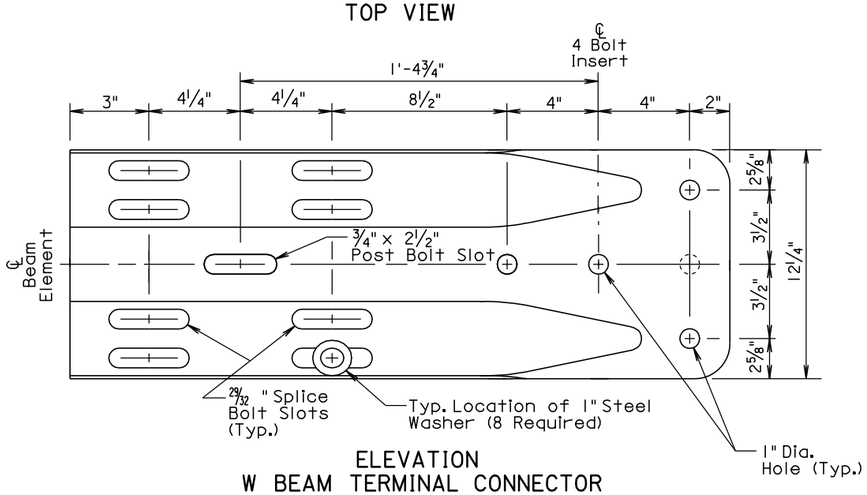


ELEVATION
W BEAM TERMINAL CONNECTOR

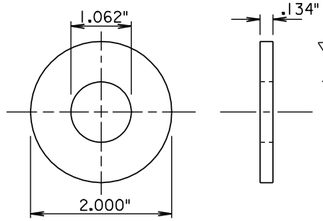


1" STEEL WASHER

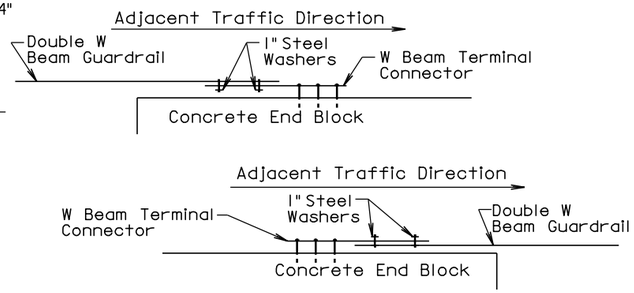


**GENERAL NOTES:**

W Beam Terminal Connectors shall be 10 gauge.

When the W beam terminal connector is used to connect the rail to the bridge, 1" steel washers shall be used at the lap splice and the washers shall be in direct contact with the 3" slots of the W beam terminal connector. See the drawings above for the typical locations of the 1" steel washers.

There will be no separate payment for furnishing and installing the W Beam Terminal Connector. All costs for the W Beam Terminal Connector shall be incidental to the contract unit price per foot for the respective "W Beam Guardrail" bid item.

September 14, 2001

Published Date: 3rd Qtr. 2011

SDDOT

**W BEAM TERMINAL CONNECTOR AND 1" STEEL WASHER**

PLATE NUMBER 630.35

Sheet 1 of 1

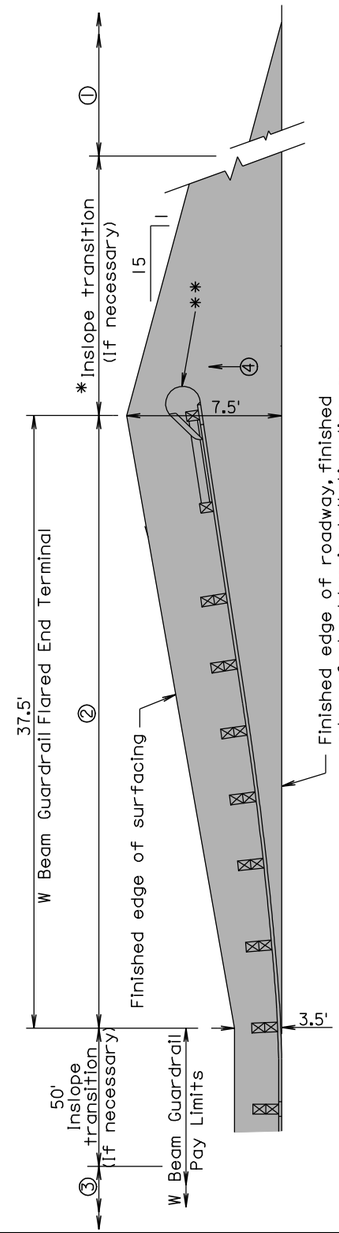


PLAN

① Same inslope as mainline inslope
② 4:1 inslope
③ 2:1 inslope or flatter, or inslope as specified in plans
④ Same slope as roadway cross slope

* The length of inslope transition varies with the amount of change between inslopes. The length of the transition shall change 100' for every whole number change in the inslope. For Example: If the inslope changes from a 5:1 to a 4:1 the length of the inslope transition would be 100'. If the inslope changes from a 6:1 to a 4:1 the length of the inslope transition would be 200'.

**GENERAL NOTES:**

The W beam guardrail flared end terminal shall be installed according to the manufacturer's installation instructions.

** An adhesive object marker shall be placed on the end section buffer or extruder after placement of the end section buffer or extruder. The adhesive object marker dimensions may be 16" x 16" or other variation due to the shape of the end section buffer or extruder. A minimum of 256 square inches of object marker reflective sheeting area is required. The reflective sheeting shall be fluorescent yellow super or very high intensity. All costs for furnishing and installing the adhesive object marker shall be incidental to various contract items.

Asphalt concrete shall be the same type used elsewhere on the project or shall be as specified in the plans. If asphalt concrete is not specified in the plans, the asphalt concrete shall conform to the SD Standard Specifications for "Asphalt Concrete Composite."

Granular material shall be the same type used elsewhere on the project or shall be as specified in the plans. If granular material type is not specified in the plans, the material shall conform to the SD Standard Specifications for "Base Course". The granular material shall be placed the same thickness as the mainline surfacing or as specified in the plans.

September 6, 2009

Published Date: 3rd Qtr. 2011

SDDOT

**EMBANKMENT AND SURFACING FOR W BEAM GUARDRAIL FLARED END TERMINAL**

PLATE NUMBER 630.45

Sheet 1 of 1

Published Date: 3rd Qtr. 2011

SDDOT

# EMBANKMENT AND SURFACING FOR W BEAM GUARDRAIL TANGENT END TERMINAL

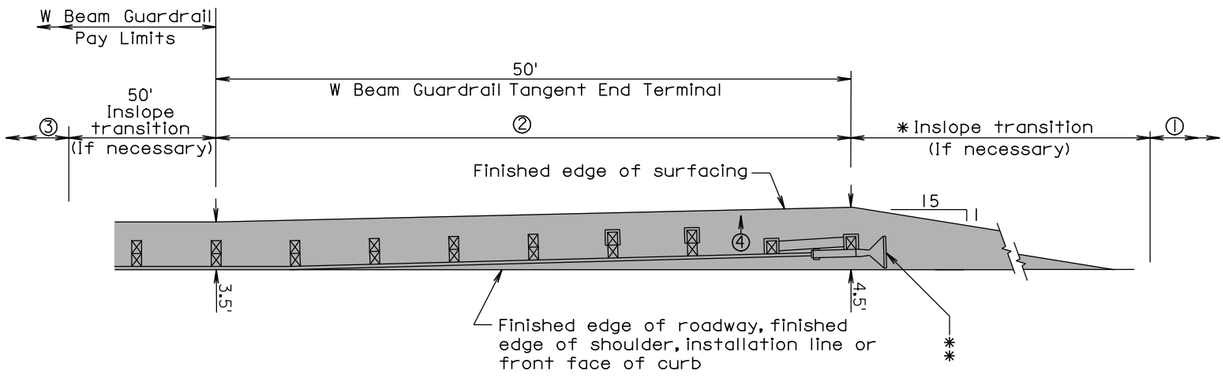


PLAN

2" Asphalt concrete surfacing with variable thickness granular material

① Same inslope as mainline inslope

② 4:1 inslope

③ 2:1 inslope or flatter, or inslope as specified in plans

④ Same slope as roadway cross slope

✱ The length of inslope transition varies with the amount of change between inslopes. The length of the transition shall change 100' for every whole number change in the inslope. For Example: If the inslope changes from a 5:1 to a 4:1 the length of the inslope transition would be 100'. If the inslope changes from a 6:1 to a 4:1 the length of the inslope transition would be 200'.

**GENERAL NOTES:**

The W beam guardrail tangent end terminal shall be installed according to the manufacturer's installation instructions.

✱✱An adhesive object marker shall be placed on the end section buffer or extruder after placement of the end section buffer or extruder. The adhesive object marker dimensions may be 16" x 16" or other variation due to the shape of the end section buffer or extruder. A minimum of 256 square inches of object marker reflective sheeting area is required. The reflective sheeting shall be fluorescent yellow super or very high intensity. All costs for furnishing and installing the adhesive object marker shall be incidental to various contract items.

Asphalt concrete shall be the same type used elsewhere on the project or shall be as specified in the plans. If asphalt concrete is not specified in the plans, the asphalt concrete shall conform to the SD Standard Specifications for "Asphalt Concrete Composite."

Granular material shall be the same type used elsewhere on the project or shall be as specified in the plans. If granular material type is not specified in the plans, the material shall conform to the SD Standard Specifications for "Base Course". The granular material shall be placed the same thickness as the mainline surfacing or as specified in the plans.

September 6, 2009

PLATE NUMBER 630.46

Sheet 1 of 1

Published Date: 3rd Qtr. 2011

SDDOT

# W BEAM GUARDRAIL BREAKAWAY CABLE TERMINAL

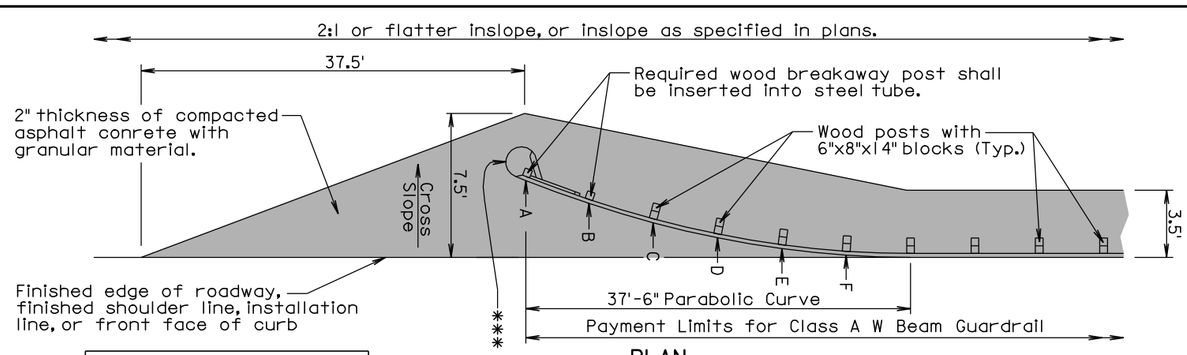


PLAN

| OFFSETS FOR BREAKAWAY CABLE TERMINAL | |
|---|---|
| POST | OFFSET |
| A | 4.00' |
| B | 2.79' |
| C | 1.79' |
| D | 1.01' |
| E | 0.45' |
| F | 0.11' |

Offsets shall be measured from the installation line to the face of the W beam guardrail.

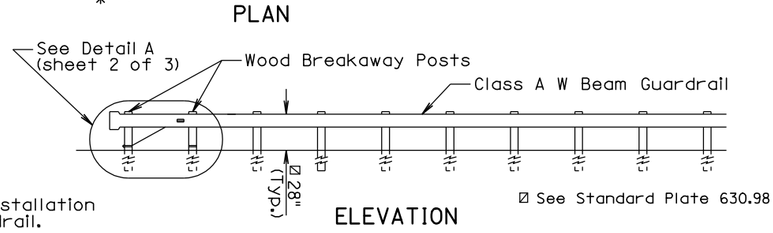


ELEVATION

Ø See Standard Plate 630.98

**GENERAL NOTES:**

The finished embankment surfacing cross slope shall match the roadway cross slope; however, if a steeper cross slope is necessary the steepest allowable cross slope is 10:1.

Asphalt concrete shall be the same type used elsewhere on the project or shall be as specified in the plans. If asphalt concrete is not specified in the plans, the asphalt concrete shall conform to the SD Standard Specifications for "Asphalt Concrete Composite."

Granular material shall be the same type used elsewhere on the project or shall be as specified in the plans. If granular material type is not specified in the plans, the material shall conform to the SD Standard Specifications for "Base Course". The granular material shall be placed the same thickness as the mainline surfacing or as specified in the plans.

✱✱✱An adhesive object marker shall be placed on the end section buffer after placement of the end section buffer. The adhesive object marker dimensions may be 16" x 16" or other variation due to the shape of the end section buffer. A minimum of 256 square inches of object marker reflective sheeting area is required. The reflective sheeting shall be fluorescent yellow super or very high intensity. All costs for furnishing and installing the adhesive object marker shall be incidental to various contract items.

Costs for constructing the W Beam Guardrail Breakaway Cable Terminal including labor, equipment, and materials including the anchor bracket, cable assembly, steel tubes, soil plates, bearing plate, pipe sleeve, W beam end section(buffer), modified W beam terminal connector, and all necessary hardware shall be incidental to the contract unit price per each for "W Beam Guardrail Breakaway Cable Terminal".

June 26, 2010

PLATE NUMBER 630.47

Sheet 1 of 3

Plotting Date: 04-OCT-2011

| STATE OF SOUTH DAKOTA | PROJECT | SHEET | TOTAL SHEETS |
|---|---|---|---|
| | 0001-469<br>000N-469<br>000P-469 | 19 | 29 |

Username - trrcl1951

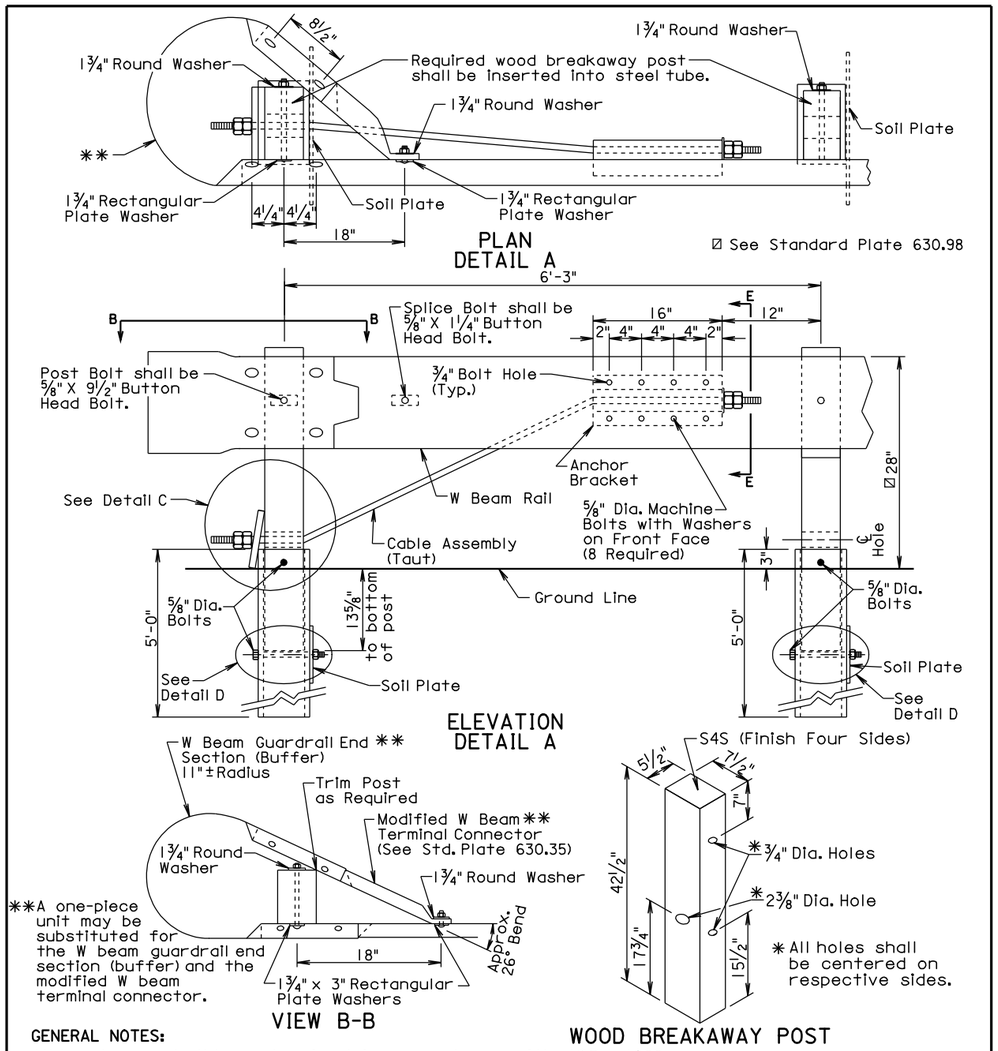


GENERAL NOTES:

All hardware shall be galvanized in accordance with ASTM A153.

The steel tubes shall meet the requirements of ASTM Specification A500, Grade B, and shall be galvanized after fabrication in accordance with the requirements of AASHTO Specification M111.

The anchor bracket, soil plate, and bearing plate shall be fabricated from steel that meets ASTM A36 Specifications. They shall be galvanized after fabrication in accordance with ASTM A123.

The W Beam End Section (Buffer) shall be 12 gage galvanized steel.

The cable shall be ¾", Type II, with Class A coating in conformance with AASHTO M30.

June 26, 2010

| Published Date: 3rd Qtr. 2011 | SDDOT | W BEAM GUARDRAIL BREAKAWAY CABLE TERMINAL | PLATE NUMBER 630.47 |
|---|---|---|---|
| | | | Sheet 2 of 3 |

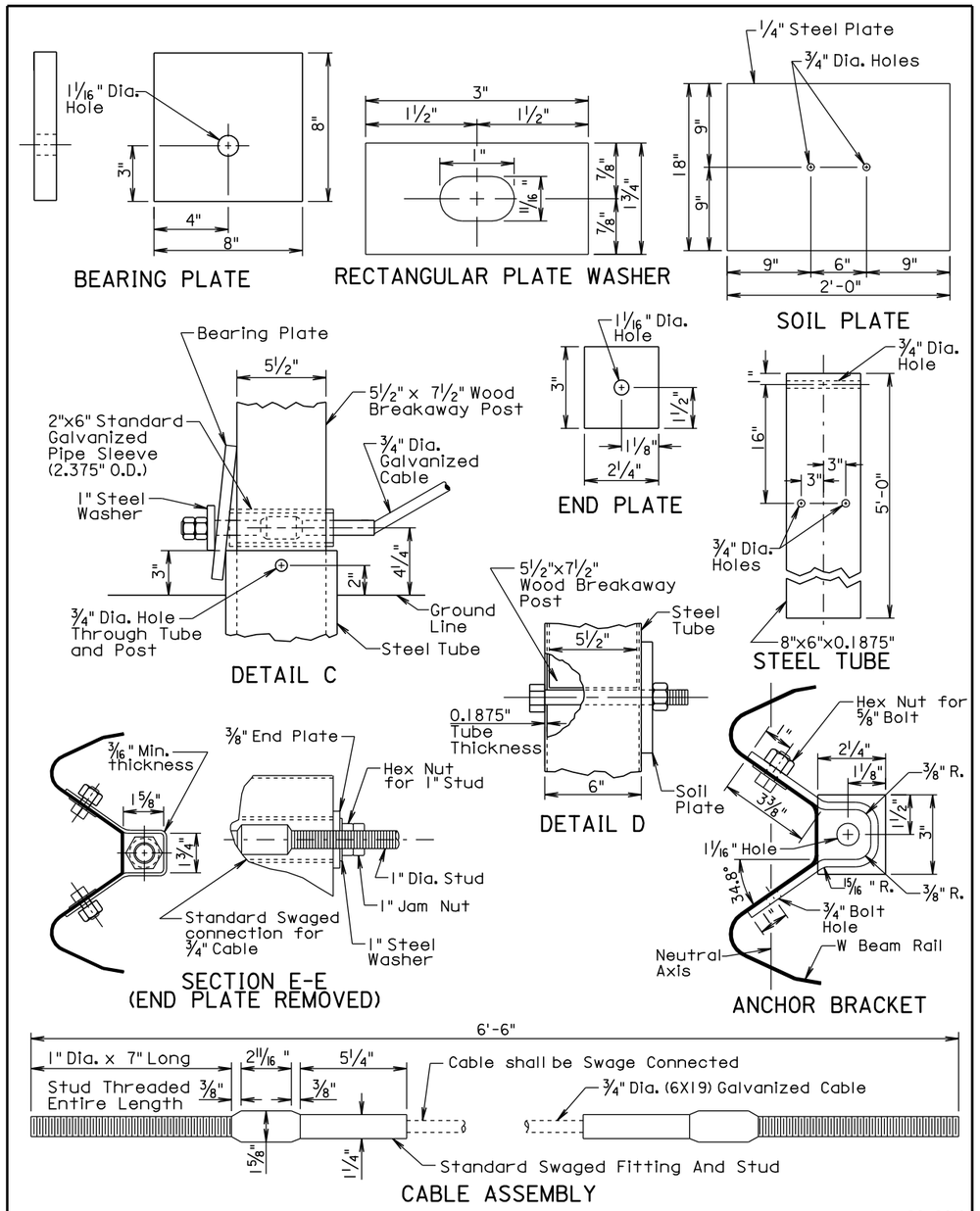


June 26, 2010

| Published Date: 3rd Qtr. 2011 | SDDOT | W BEAM GUARDRAIL BREAKAWAY CABLE TERMINAL | PLATE NUMBER 630.47 |
|---|---|---|---|
| | | | Sheet 3 of 3 |

Username - trrcll951

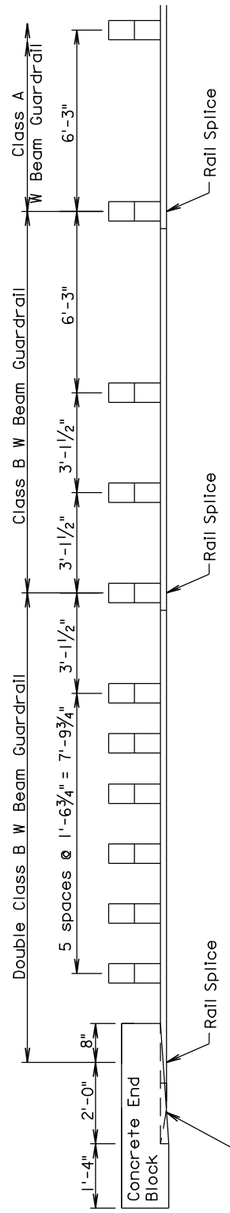


POST SPACING ARRANGEMENT FOR W BEAM GUARDRAIL AT BRIDGE END

March 31, 2000

Published Date: 3rd Qtr. 2011

SDDOT

**POST SPACING ARRANGEMENT FOR W BEAM GUARDRAIL AT BRIDGE END**

PLATE NUMBER 630.50

Sheet 1 of 1

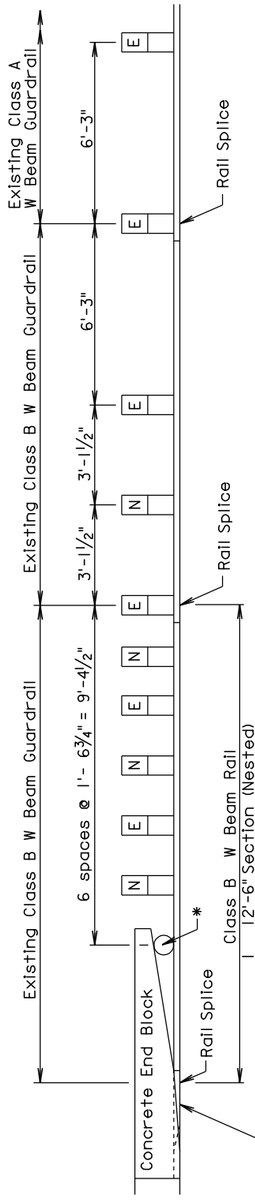


N = New post and block
E = Existing post and block

* Remove and discard the in place tapered block and ⅝" threaded bolt. Install at the same location a 6" I.D. x 9" long schedule 40 galvanized pipe. Fasten to nested rails with 2" button head bolt with nut, rectangular plate washer, and ⅝" bolt washer.

* All costs incurred to remove the block and furnish and install the pipe shall be incidental to the contract unit price per foot for "Straight Class B W Beam Rail".

POST SPACING ARRANGEMENT FOR W BEAM GUARDRAIL AT BRIDGE END (W BEAM RETROFIT)

March 31, 2000

Published Date: 3rd Qtr. 2011

SDDOT

**POST SPACING ARRANGEMENT FOR W BEAM GUARDRAIL AT BRIDGE END (W BEAM RETROFIT)**

PLATE NUMBER 630.55

Sheet 1 of 1

Username - trrcll951

Published Date: 3rd Qtr. 2011

SDDOT

POST SPACING ARRANGEMENT FOR W BEAM GUARDRAIL AT BRIDGE END (W BEAM RETROFIT)

PLATE NUMBER 630.56

Sheet 1 of 1

March 31, 2000

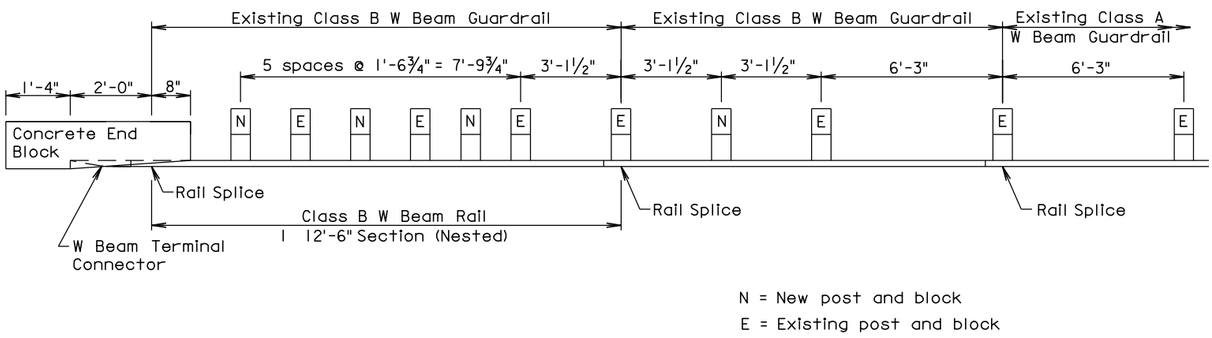


POST SPACING ARRANGEMENT FOR W BEAM GUARDRAIL AT BRIDGE END
(W BEAM RETROFIT)

Published Date: 3rd Qtr. 2011

SDDOT

POST SPACING ARRANGEMENT FOR W BEAM GUARDRAIL AT BRIDGE END (W BEAM RETROFIT)

PLATE NUMBER 630.57

Sheet 1 of 1

March 31, 2000

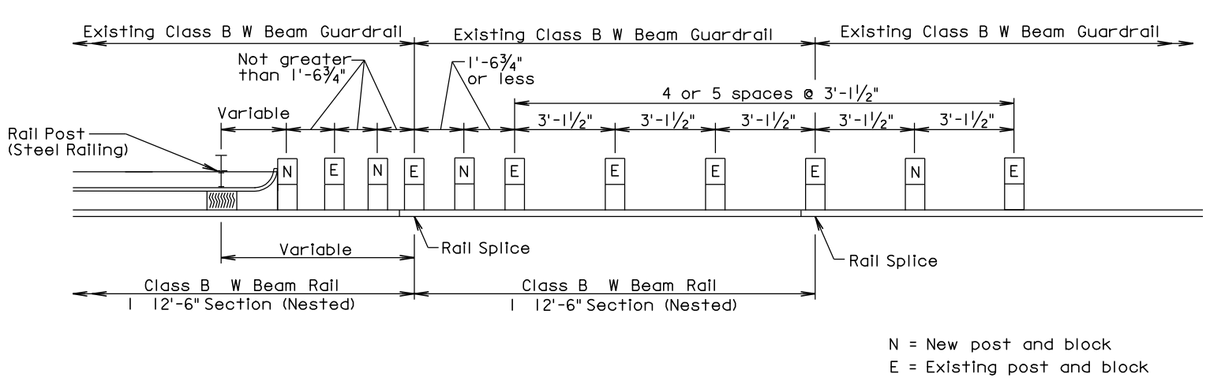


POST SPACING ARRANGEMENT FOR W BEAM GUARDRAIL AT BRIDGE END
(W BEAM RETROFIT)

Plotting Date: 04-OCT-2011

| STATE OF SOUTH DAKOTA | PROJECT | SHEET | TOTAL SHEETS |
|---|---|---|---|
| | 0001-469<br>000N-469<br>000P-469 | 22 | 29 |

Username - trrcl1951

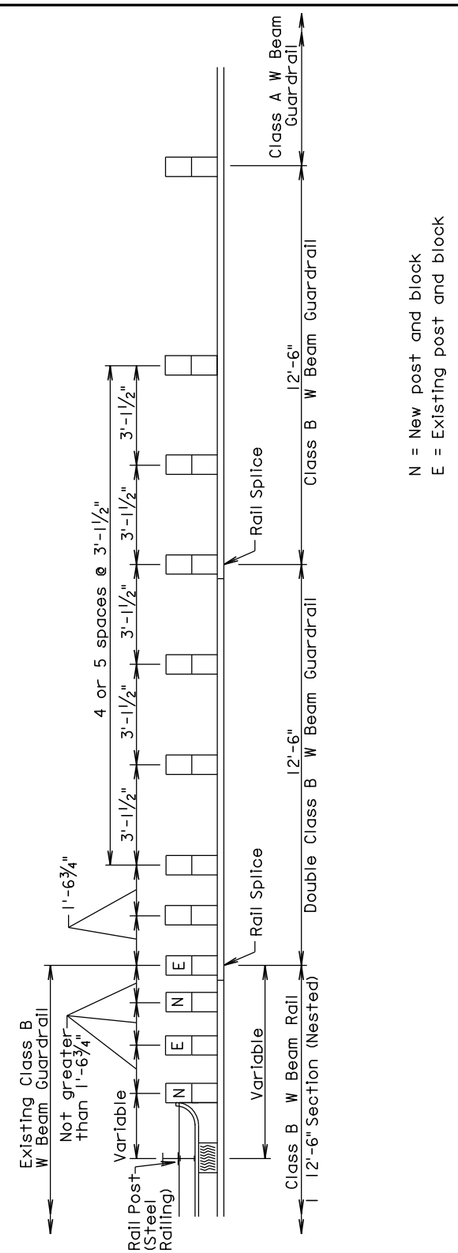


N = New post and block
E = Existing post and block

POST SPACING ARRANGEMENT FOR W BEAM GUARDRAIL AT BRIDGE END
(W BEAM REALIGNMENT)

March 31, 2000

Published Date: 3rd Qtr. 2011

SDDOT

**POST SPACING ARRANGEMENT FOR W BEAM GUARDRAIL AT BRIDGE END (W BEAM REALIGNMENT)**

PLATE NUMBER 630.58

Sheet 1 of 1

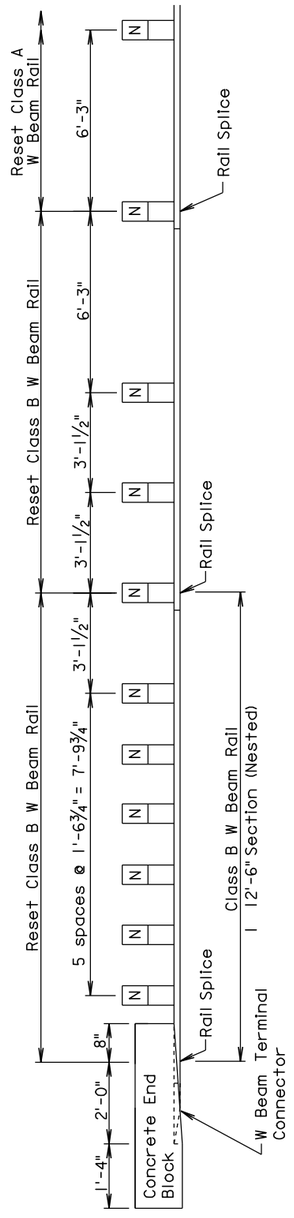


N = New post and block

POST SPACING ARRANGEMENT FOR W BEAM GUARDRAIL AT BRIDGE END
(W BEAM RESET AND RETROFIT)

March 31, 2000

Published Date: 3rd Qtr. 2011

SDDOT

**POST SPACING ARRANGEMENT FOR W BEAM GUARDRAIL AT BRIDGE END (W BEAM RESET AND RETROFIT)**

PLATE NUMBER 630.59

Sheet 1 of 1

Username - trrcll951

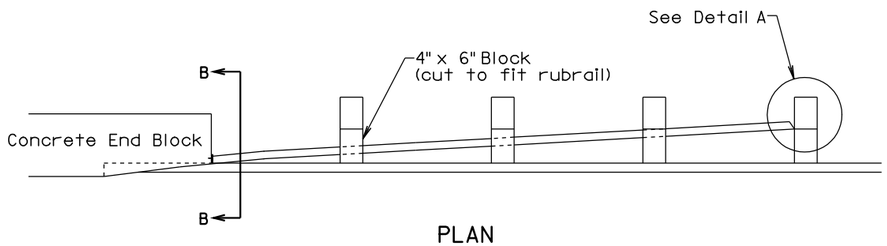


PLAN

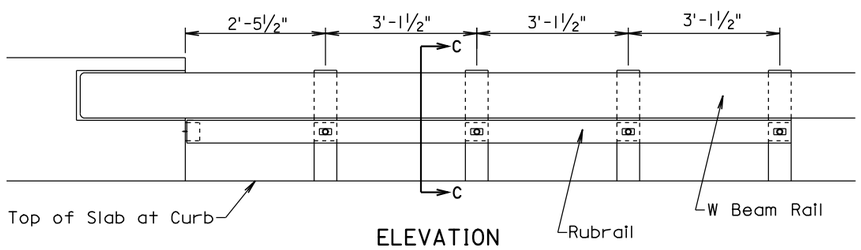


ELEVATION

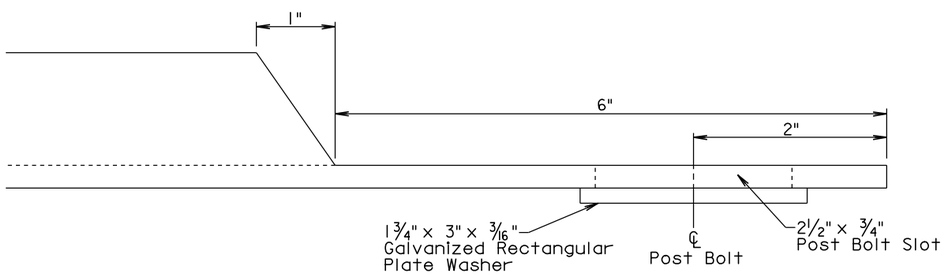


DETAIL A
(Post, Block, and Post Bolt not shown)

**GENERAL NOTES:**

The steel shall be in conformance with ASTM A 36 and shall be galvanized after fabrication in conformance with ASTM A 123. If pre-galvanized steel members are used, all cuts and welds shall be coated with an approved galvanizing paint.

Offset blocks shall be in conformance with section 630 of the Standard Specifications.

All hardware shall be in conformance with the requirements of AASHTO M 180.

*March 31, 2000*



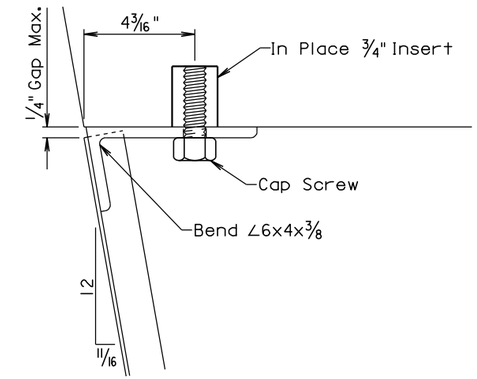


SECTION A-A

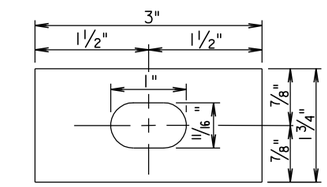


RECTANGULAR PLATE WASHER

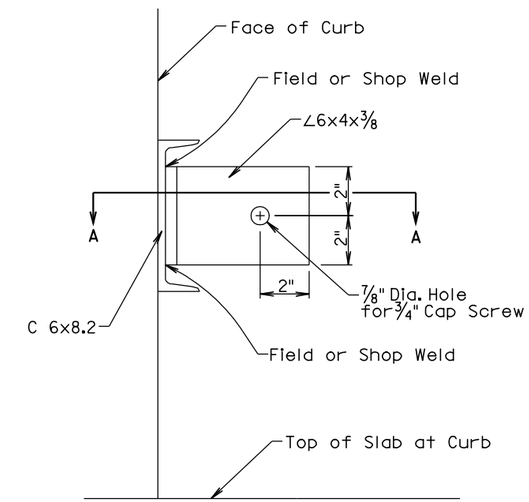


SECTION B-B

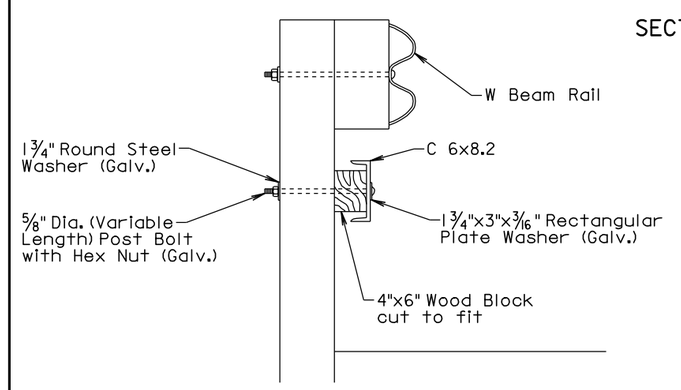


SECTION C-C

*March 31, 2000*




Username - trrcll951

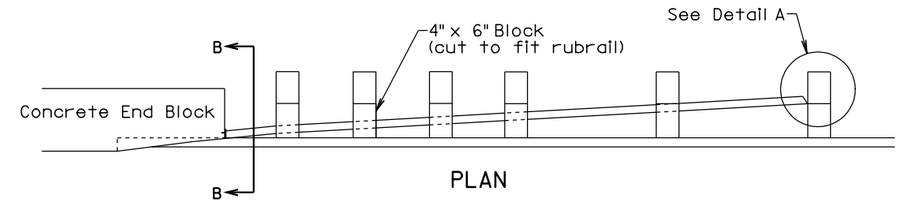


PLAN

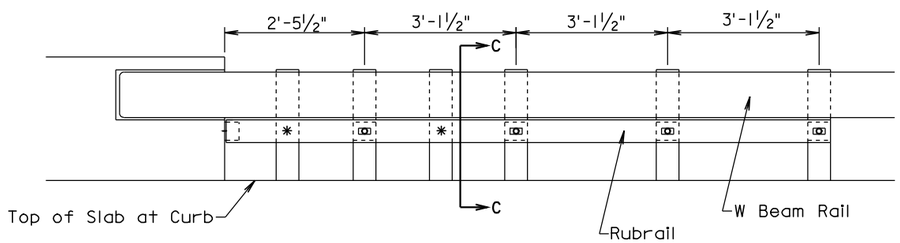


* Rubrail does not have to be attached to these posts.

ELEVATION

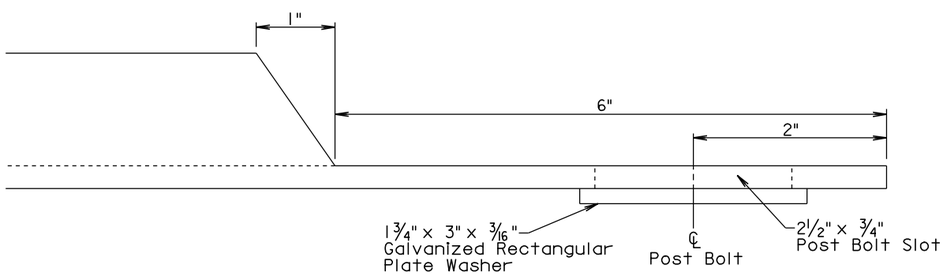


DETAIL A

(Post, Block, and Post Bolt not shown)

**GENERAL NOTES:**

The steel shall be in conformance with ASTM A 36 and shall be galvanized after fabrication in conformance with ASTM A 123. If pre-galvanized steel members are used, all cuts and welds shall be coated with an approved galvanizing paint.

Offset blocks shall be in conformance with section 630 of the Standard Specifications.

All hardware shall be in conformance with the requirements of AASHTO M 180.

The wedge type anchor bolt, nut, and washer shall be hot dipped galvanized or made of a corrosion resistent material. The wedge type anchor shall be capable of sustaining an ultimate load in tension or shear of 17,000 pounds when the anchor is set in 4,500 psi compressive strength concrete. The anchor shall be installed according to the manufacturer's recommendations. The Contractor shall obtain certification from the manufacturer that the anchor meets the tensile and shear requirements and shall submit the certification to the Engineer. The cost for furnishing and installing the wedge type anchor, nut, and washer shall be incidental to the contract unit price per foot for "Rubrail".

March 31, 2000

| Published Date: 3rd Qtr. 2011 | SDDOT | RUBRAIL AT BRIDGE END (W BEAM RETROFIT AND DRILLED IN ANCHOR) | PLATE NUMBER 630.76 |
|---|---|---|---|
| | | | Sheet 1 of 2 |

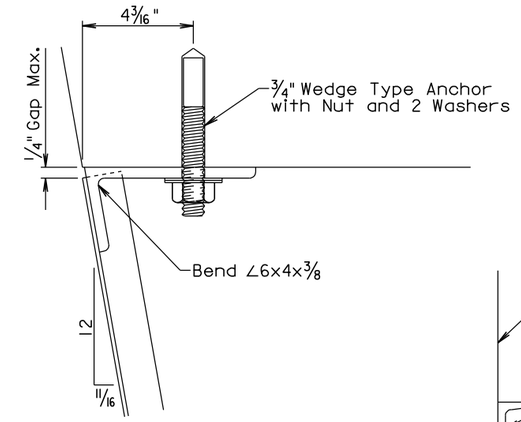


SECTION A-A

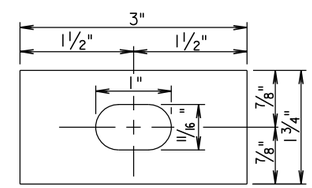


RECTANGULAR PLATE WASHER

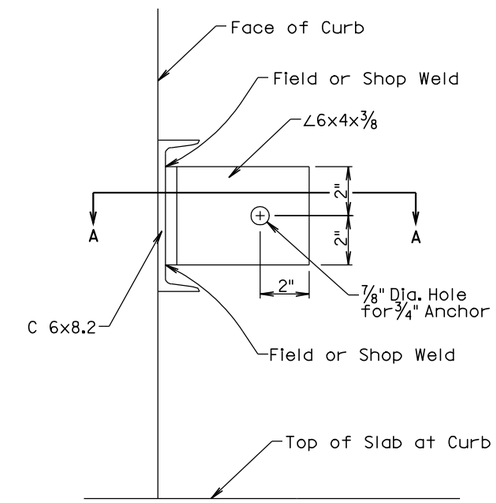


SECTION B-B

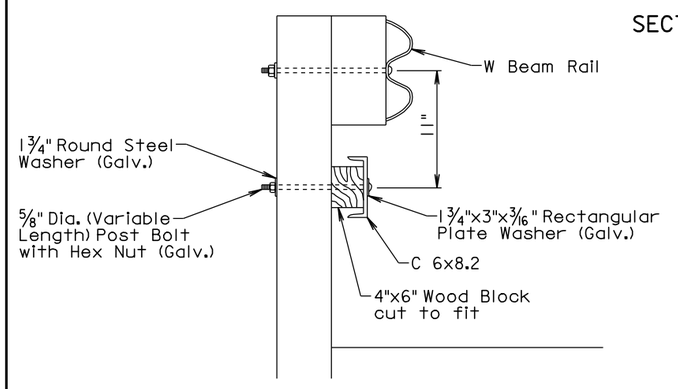


SECTION C-C

March 31, 2000

| Published Date: 3rd Qtr. 2011 | SDDOT | RUBRAIL AT BRIDGE END (W BEAM RETROFIT AND DRILLED IN ANCHOR) | PLATE NUMBER 630.76 |
|---|---|---|---|
| | | | Sheet 2 of 2 |

Username - trrcll951

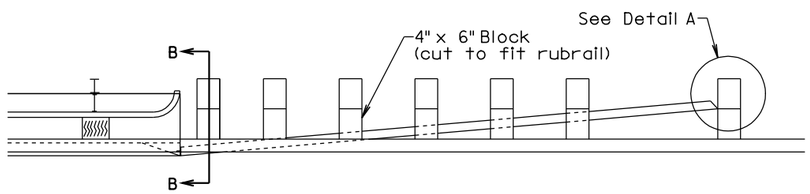


PLAN

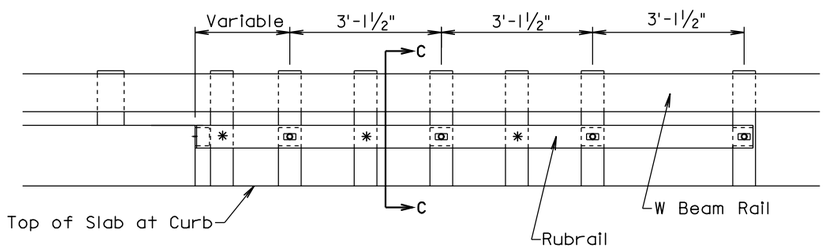


*Rubrail does not have to be attached to these posts.

ELEVATION

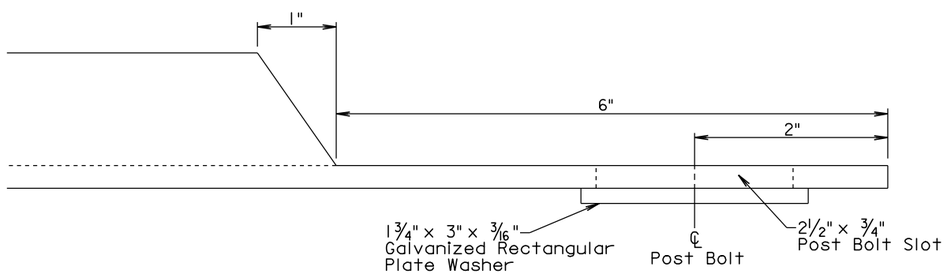


DETAIL A

(Post, Block, and Post Bolt not shown)

**GENERAL NOTES:**

The steel shall be in conformance with ASTM A 36 and shall be galvanized after fabrication in conformance with ASTM A 123. If pre-galvanized steel members are used, all cuts and welds shall be coated with an approved galvanizing paint.

Offset blocks shall be in conformance with section 630 of the Standard Specifications.

All hardware shall be in conformance with the requirements of AASHTO M 180.

*March 31, 2000*

| Published Date: 3rd Qtr. 2011 | SDDOT | RUBRAIL AT BRIDGE END (W BEAM RETROFIT AND CAST IN INSERT) | PLATE NUMBER 630.77 |
|---|---|---|---|
| | | | Sheet 1 of 2 |

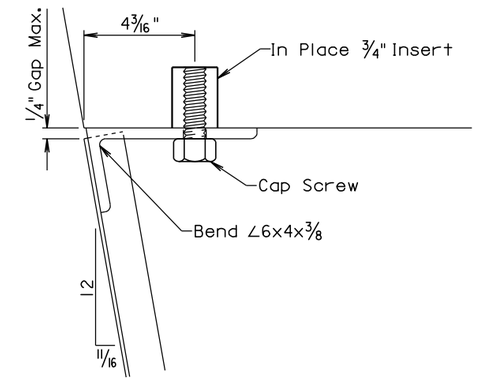


SECTION A-A

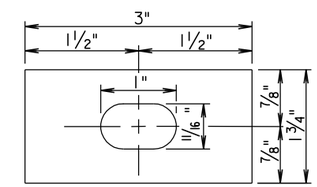


RECTANGULAR PLATE WASHER

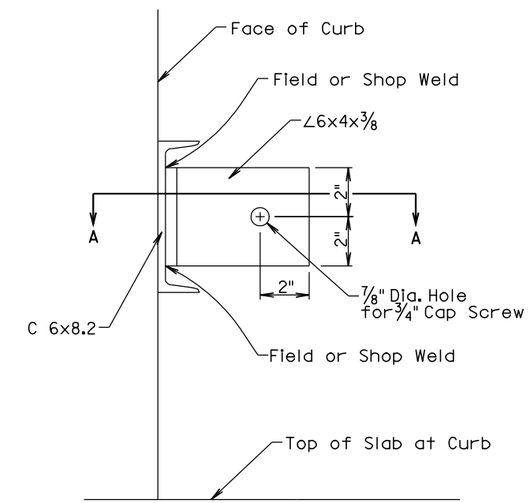


SECTION B-B

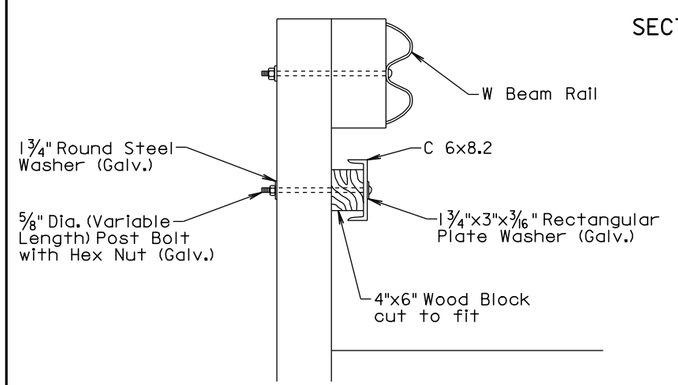


SECTION C-C

*March 31, 2000*

| Published Date: 3rd Qtr. 2011 | SDDOT | RUBRAIL AT BRIDGE END (W BEAM RETROFIT AND CAST IN INSERT) | PLATE NUMBER 630.77 |
|---|---|---|---|
| | | | Sheet 2 of 2 |

Username - trrcll951

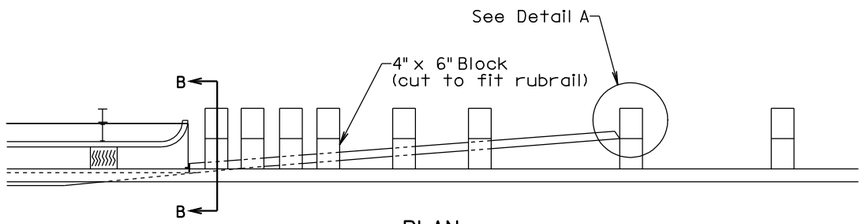


PLAN

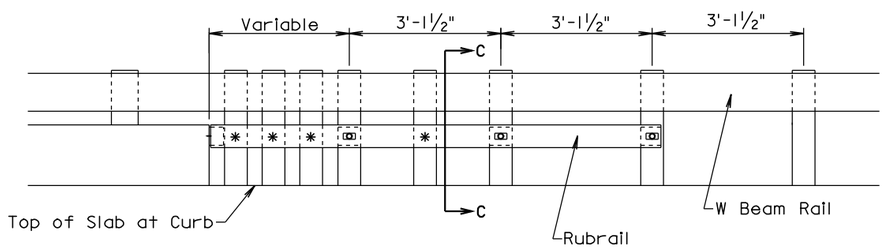


*Rubrail does not have to be attached to these posts.

ELEVATION

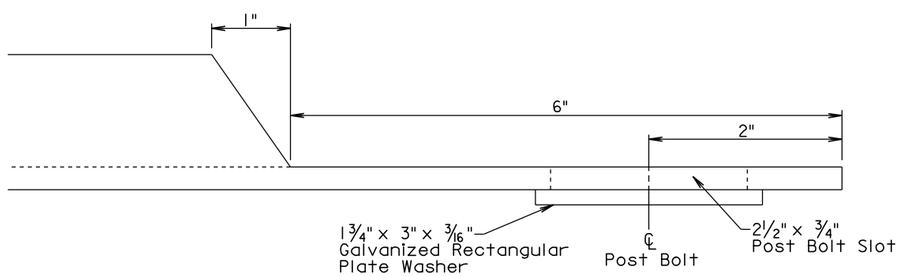


DETAIL A

(Post, Block, and Post Bolt not shown)

**GENERAL NOTES:**

The steel shall be in conformance with ASTM A 36 and shall be galvanized after fabrication in conformance with ASTM A 123. If pre-galvanized steel members are used, all cuts and welds shall be coated with an approved galvanizing paint.

Offset blocks shall be in conformance with section 630 of the Standard Specifications.

All hardware shall be in conformance with the requirements of AASHTO M 180.

March 31, 2000

| Published Date: 3rd Qtr. 2011 | SDDOT | RUBRAIL AT BRIDGE END (W BEAM RETROFIT AND DRILLED IN ANCHOR) | PLATE NUMBER 630.78 |
|---|---|---|---|
| | | | Sheet 1 of 2 |

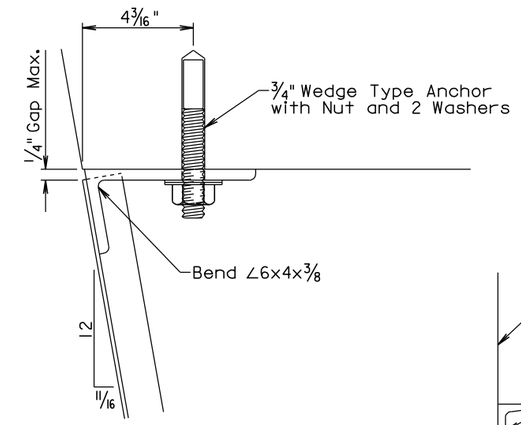


SECTION A-A

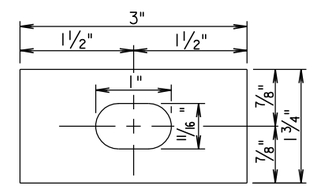


RECTANGULAR PLATE WASHER

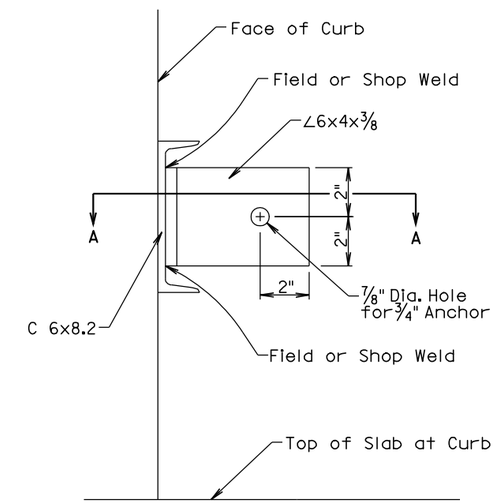


SECTION B-B

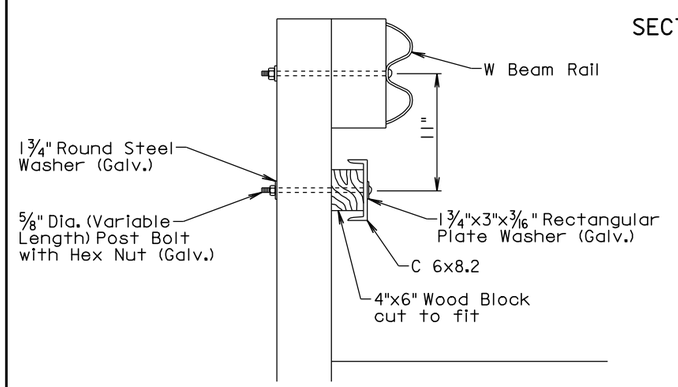


SECTION C-C

March 31, 2000

| Published Date: 3rd Qtr. 2011 | SDDOT | RUBRAIL AT BRIDGE END (W BEAM RETROFIT AND DRILLED IN ANCHOR) | PLATE NUMBER 630.78 |
|---|---|---|---|
| | | | Sheet 2 of 2 |

Username - trrcll951

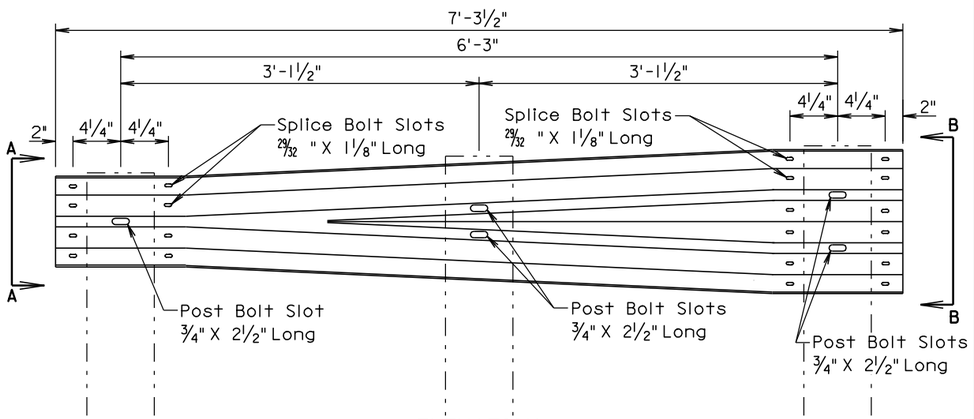


ELEVATION

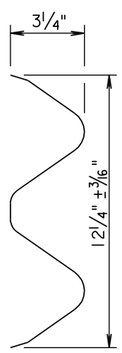


VIEW A-A

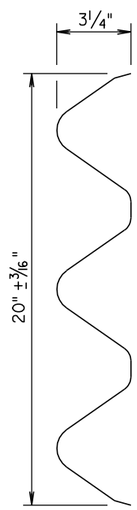


VIEW B-B

**GENERAL NOTE:**

All costs for constructing the W Beam to Thrie Beam Guardrail Transition including labor, equipment, and materials including two posts, two blocks, W beam to thrie beam transition section, and hardware shall be incidental to the contract unit price per each for "W Beam to Thrie Beam Guardrail Transition".

March 31, 2000

| Published Date: 3rd Qtr. 2011 | SDDOT | W BEAM TO THRIE BEAM GUARDRAIL TRANSITION SECTION | PLATE NUMBER 630.82 |
|---|---|---|---|
| | | | Sheet 1 of 1 |

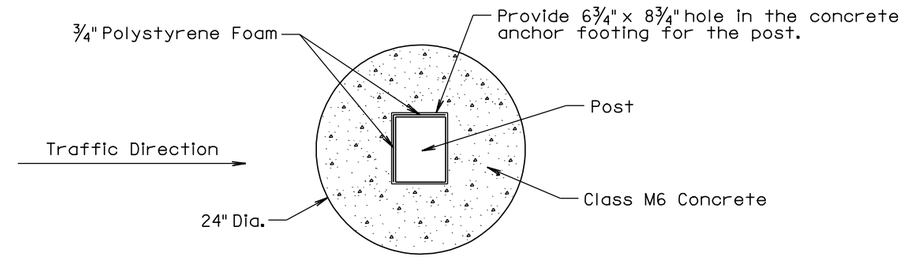


PLAN
(PREFERRED 24" DIA. ROUND
CONCRETE ANCHOR FOOTING)

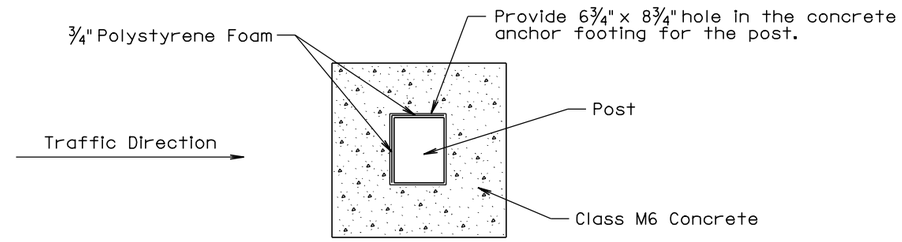


PLAN
(20" x 20" SQUARE
CONCRETE ANCHOR FOOTING)

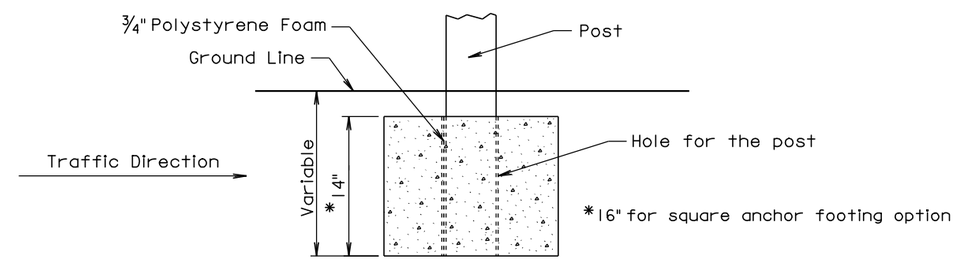


ELEVATION

**GENERAL NOTES:**

In areas where the required guardrail wood post depth is not obtainable, shorter posts may be used and shall be anchored in concrete in accordance with the details shown on this standard plate.

A 20" x 20" square concrete anchor footing may be used in lieu of the 24" diameter round anchor footing.

Forms for the concrete anchor footing hole is not required.

Concrete for the concrete anchor footing shall be Class M6.

Three quarter inch polystyrene foam shall be attached to two sides of the posts. See details above for placement position of the polystyrene foam.

There will be no separate payment for furnishing and installing the concrete anchor footing for short guardail post. All costs for concrete anchor footings shall be incidental to the contract unit price per foot for the respective "Thrie Beam or W Beam Guardrail" bid item.

March 31, 2000

| Published Date: 3rd Qtr. 2011 | SDDOT | CONCRETE ANCHOR FOOTING FOR SHORT GUARDRAIL POST | PLATE NUMBER 630.84 |
|---|---|---|---|
| | | | Sheet 1 of 1 |

Username - trrcll951

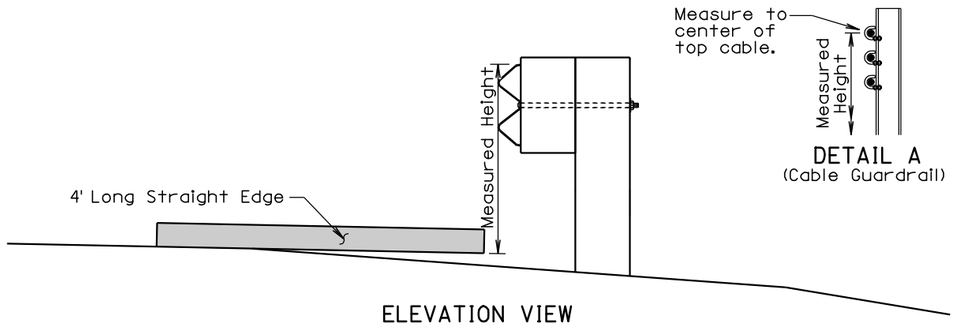


ELEVATION VIEW
(Guardrail Adjacent to Differential Slopes)

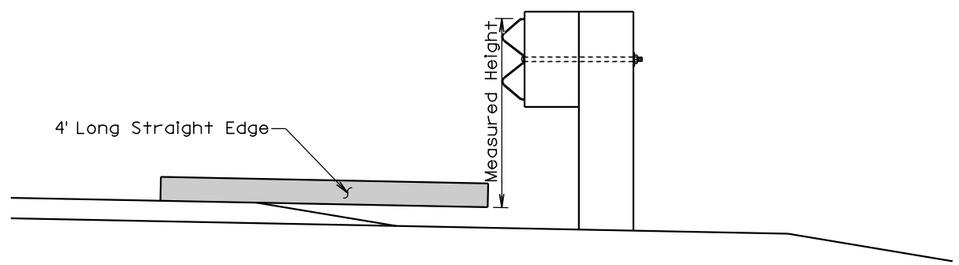


ELEVATION VIEW
(Guardrail Adjacent to Differential Surfacing Elevations)

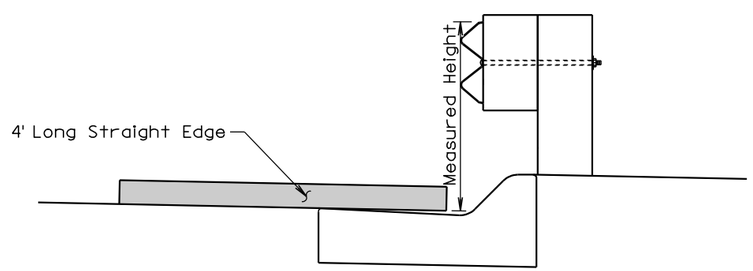


ELEVATION VIEW
(Guardrail at Curb and Gutter)

**GENERAL NOTES:**

The W Beam guardrail shown is for illustrative purpose. The guardrail height for all types of guardrail systems shall be measured in accordance with this standard plate.

When measuring height of cable guardrail or cable barrier the height shall be measured to the center of the top cable. See Detail A.

*June 26, 2010*

| | | | |
|---|---|---|---|
| Published Date: 3rd Qtr. 2011 | SDDOT | MEASURING GUARDRAIL HEIGHT | PLATE NUMBER 630.98<br>Sheet 1 of 1 |

Username - trrcll951