STATE OF SOUTH DAKOTA	PROJECT	SHEET	TOTAL SHEETS
	024E-452 024W-452	1	17

Plotting Date: 05/09/2013

STATE OF SOUTH DAKOTA
DEPARTMENT OF TRANSPORTATION
PLANS FOR PROPOSED

PROJECT 0240E-452 & 0240W-452 SD HIGHWAY 240 PENNINGTON COUNTY

REPLACE CURB AND GUTTER
PCN i2vg & i2vh

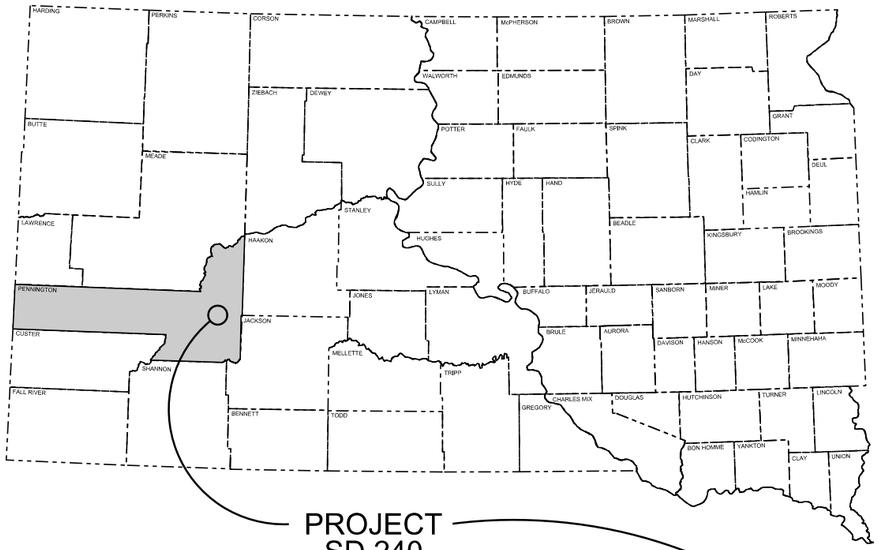

INDEX OF SHEETS

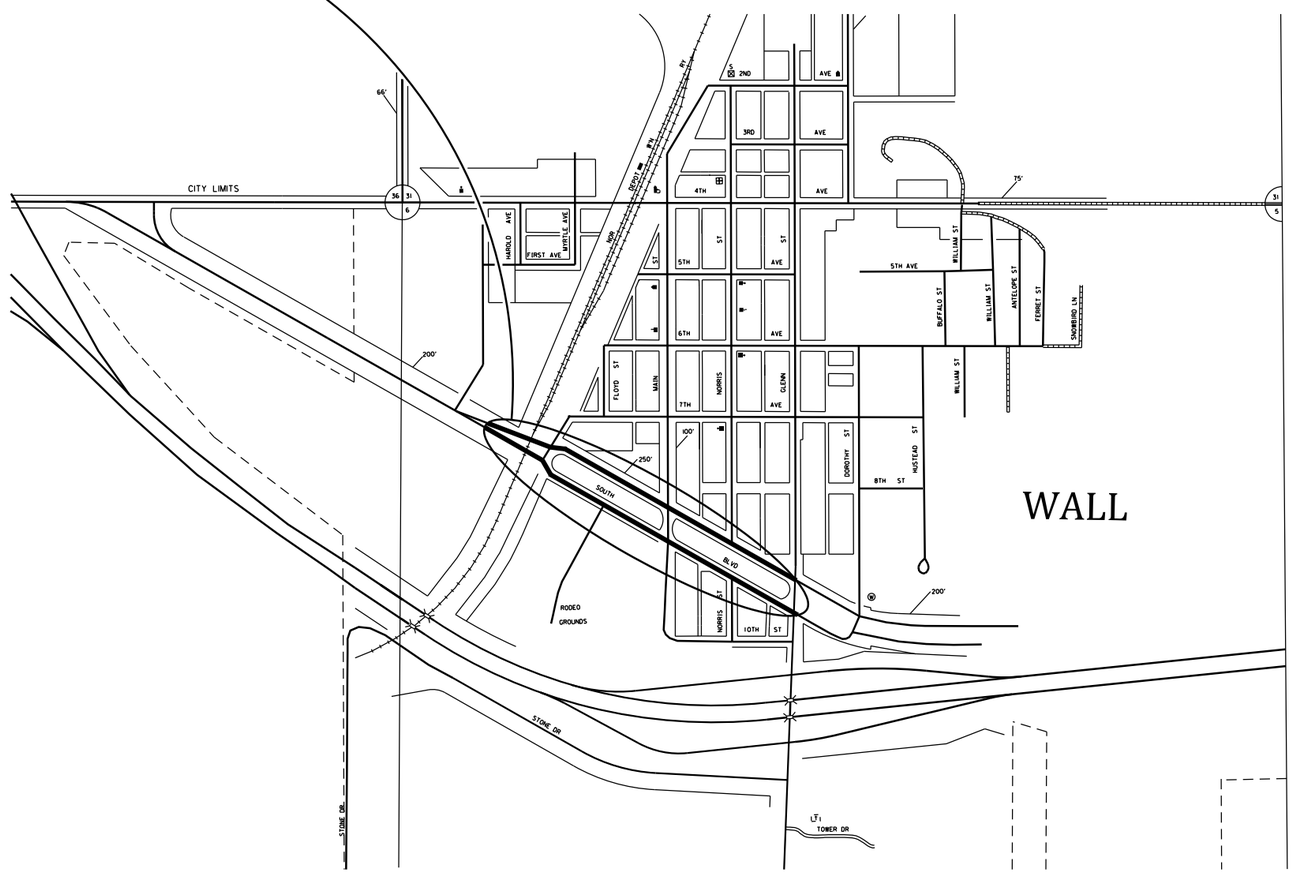

DESIGN DESIGNATION

ADT (2012)	902
ADT (2032)	1510
DHV	181
D	52%
T DHV	1.6%
T ADT	3.5%
V	25 mph

STORM WATER PERMIT

No Storm Water Permit Required

Plot Scale - 1:200

trrc12608

File - ...\Title.dgn

ESTIMATE OF QUANTITIES

Project No. 0240E-442 – PCN I2VG

Bid Item Number	Item	Quantity	Unit
009E0010	Mobilization	Lump Sum	LS
110E0300	Remove Concrete Curb and Gutter	774	Ft
110E1010	Remove Asphalt Concrete Pavement	98.4	SqYd
110E1400	Remove Pavement Marking, 4" or Equivalent	600	Ft
120E0010	Unclassified Excavation	159	CuYd
120E6200	Water for Granular Material	3.6	MGal
230E0100	Remove and Replace Topsoil	Lump Sum	LS
260E1010	Base Course	183.0	Ton
320E1200	Asphalt Concrete Composite	96.7	Ton
632E1320	2.0"x2.0" Perforated Tube Post	36.0	Ft
632E3205	Flat Aluminum Sign, Nonremovable Copy Super/Very High Intensity	27.0	SqFt
633E0010	Cold Applied Plastic Pavement Marking, 4"	300	Ft
633E0020	Cold Applied Plastic Pavement Marking, 8"	236	Ft
633E1400	Pavement Marking Paint, 4" White	500	Ft
633E1405	Pavement Marking Paint, 4" Yellow	500	Ft
633E5000	Grooving for Cold Applied Plastic Pavement Marking, 4"	300	Ft
633E5005	Grooving for Cold Applied Plastic Pavement Marking, 8"	236	Ft
634E0010	Flagging	100	Hour
634E0100	Traffic Control	527	Unit
634E0120	Traffic Control, Miscellaneous	Lump Sum	LS
650E0080	Type B68 Concrete Curb and Gutter	753	Ft
734E0010	Erosion Control	Lump Sum	LS

Project No. 0240W-442 – I2VH

Bid Item Number	Item	Quantity	Unit
009E0010	Mobilization	Lump Sum	LS
110E0300	Remove Concrete Curb and Gutter	827	Ft
110E0320	Remove Concrete Gutter	196	Ft
110E1010	Remove Asphalt Concrete Pavement	151.3	SqYd
120E0010	Unclassified Excavation	132	CuYd
120E6200	Water for Granular Material	2.0	MGal
230E0100	Remove and Replace Topsoil	Lump Sum	LS
260E1010	Base Course	111.7	Ton
320E1200	Asphalt Concrete Composite	68.5	Ton
633E0010	Cold Applied Plastic Pavement Marking, 4"	49	Ft
633E1400	Pavement Marking Paint, 4" White	500	Ft
633E1405	Pavement Marking Paint, 4" Yellow	500	Ft
633E5000	Grooving for Cold Applied Plastic Pavement Marking, 4"	40	Ft
634E0010	Flagging	100	Hour
634E0100	Traffic Control	561	Unit
634E0120	Traffic Control, Miscellaneous	Lump Sum	LS
650E0080	Type B68 Concrete Curb and Gutter	808	Ft
650E4680	Type P8 Concrete Gutter	196	Ft
734E0010	Erosion Control	Lump Sum	LS

SPECIFICATIONS

Standard Specifications for Roads & Bridges, 2004 Edition and Required Provisions, Supplemental Specifications and/or Special Provisions as included in the Proposal.

SEQUENCE OF OPERATIONS

1. Set up traffic control.
2. Sawcut curb and gutter and asphalt surfacing,
3. Remove asphalt and concrete.
4. Excavate for new asphalt and curb & gutter.
5. Place base course.
6. Install curb and gutter.
7. Place new asphalt concrete composite.
8. Complete new pavement marking and signing.
9. Remove traffic control.

UTILITIES

Utilities are not planned to be affected on this project. If utilities are identified near the improvement area through the SD One Call Process as required by South Dakota Codified Law 49-7A and Administrative Rule Article 20:25, the contractor shall contact the project engineer to determine modifications that will be necessary to avoid utility impacts.

Any damage to a utility will be the Contractor's responsibility to repair.

Utilities, if identified within the limits of the proposed construction, shall be adjusted by the owner as addressed in SDCL 31-26-23 unless otherwise indicated in these plans.

WATER SOURCE

The Contractor shall not withdraw water with equipment previously used outside the State of South Dakota without prior approval from the DOT Environmental Office.

The DOT Environmental Office contact is the Environmental Project Scientist, 605-773-3268. The WATER SOURCE plan note does not relieve the Contractor of his/her responsibility to obtain the necessary permits from other agencies such as the Department of Environment and Natural Resources (DENR) and the United States Army Corps of Engineers (COE).

WORK AFFECTING WATERWAYS

Storm Water

At a minimum and regardless of project size, appropriate erosion and sediment control measures must be installed to control the discharge of pollutants from the construction site.

HISTORICAL PRESERVATION OFFICE CLEARANCES

The SDDOT has obtained concurrence with the State Historical Preservation Office (SHPO or THPO) for all work included within the project limits and all designated option borrow sites provided within the plans.

All earth disturbing activities not designated within the plans require review of cultural resources impacts. This work includes, but is not limited to: staging areas, borrow sites, waste disposal sites, and all material processing sites.

The Contractor shall arrange and pay for a cultural resource survey and/or records search. The Contractor has the option to contact the state Archaeological Research Center (ARC) at 605-394-1936 or another qualified archaeologist, to obtain either a records search or a cultural resources survey. A record search might be sufficient for review; however, a cultural resources survey may need to be conducted by a qualified archaeologist.

The Contractor shall provide ARC with the following: a topographical map or aerial view on which the site is clearly outlined, site dimensions, project number, and PCN. If applicable, provide evidence that the site has been previously disturbed by farming, mining, or construction activities with a landowner statement that artifacts have not been found on the site.

The Contractor shall submit the records search or cultural resources survey report and if the location of the site is within the current geographical or historic boundaries of any South Dakota reservation to SDDOT Environmental Engineer, 700 East Broadway Avenue, Pierre, SD 57501-2586 (605-773-3180). SDDOT will submit the information to the appropriate SHPO/THPO. Allow **30 Days** from the date this information is submitted to the Environmental Engineer for SHPO/THPO review.

If evidence for cultural resources is uncovered during project construction activities, then such activities shall cease and the Project Engineer shall be immediately notified. The Project Engineer will contact the SDDOT Environmental Engineer in order to determine an appropriate course of action.

SHPO/THPO review does not relieve the Contractor of the responsibility for obtaining any additional permits and clearances for staging areas, borrow sites, waste disposal sites, or material processing sites that affect wetlands, threatened and endangered species, or waterways. The Contractor shall provide the required permits and clearances to the Project Engineer at the preconstruction meeting.

WASTE DISPOSAL SITE

The Contractor shall furnish a site(s) for the disposal of construction and/or demolition debris generated by this project.

Construction and/or demolition debris may not be disposed of within the State ROW.

The waste disposal site(s) shall be managed and reclaimed in accordance with the following from the General Permit for Highway, Road, and Railway Construction/Demolition Debris Disposal Under the South Dakota Waste Management Program issued by the Department of Environment and Natural Resources.

The waste disposal site(s) shall not be located in a wetland, within 200 feet of surface water, or in an area that adversely affects wildlife, recreation, aesthetic value of an area, or any threatened or endangered species, as approved by the Project Engineer.

If the waste disposal site(s) is located such that it is within view of any ROW, the following additional requirements shall apply:

1. Construction and/or demolition debris consisting of concrete, asphalt concrete, or other similar materials shall be buried in a trench completely separate from wood debris. The final cover over the construction and/or demolition debris shall consist of a minimum of 1 foot of soil capable of supporting vegetation. Waste disposal sites provided outside of the State ROW shall be seeded in accordance with Natural Resources Conservation Service recommendations. The seeding recommendations may be obtained through the appropriate County NRCS Office. The Contractor shall control the access to waste disposal sites not within the State ROW through the use of fences, gates, and placement of a sign or signs at the entrance to the site stating “No Dumping Allowed”.

2. Concrete and asphalt concrete debris may be stockpiled within view of the ROW for a period of time not to exceed the duration of the project. Prior to project completion, the waste shall be removed from view of the ROW or buried and the waste disposal site reclaimed as noted above.

The above requirements will not apply to waste disposal sites that are covered by an individual solid waste permit as specified in SDCL 34A-6-58, SDCL 34A-6-1.13, and ARSD 74:27:10:06.

Failure to comply with the requirements stated above may result in civil penalties in accordance with South Dakota Solid Waste Law, SDCL 34A-6-1.31.

All costs associated with furnishing waste disposal site(s), disposing of waste, maintaining control of access (fence, gates, and signs), and reclamation of the waste disposal site(s) shall be incidental to the various contract items.

SAWING IN EXISTING SURFACING

Where new Portland Cement Concrete Pavement (PCCP) or Asphalt Concrete Composite is placed adjacent to existing PCCP or asphalt pavement, the existing pavement shall be sawed full depth to a true line with a vertical face. The cost for sawing shall be incidental to the various bid items on the project.

UNCLASSIFIED EXCAVATION

The quantity of Unclassified Excavation provided in these plans is for the necessary removal of material other than asphalt concrete or Curb and Gutter. Material shall be removed to a depth of 18 inches below existing surface. A 1-foot width of asphalt surfacing shall be removed in front of and behind the in-place Curb and Gutter where asphalt surfacing is present. Additionally, excavation will be required where new asphalt is to be placed as shown in these plans. Where the Curb and Gutter is adjacent to sidewalk the sidewalk shall not be disturbed. Prior to placement of concrete, expansion joint filler shall be placed against the in-place sidewalk. Where no surfacing is present no more material than that required to provide room for forming the new Curb and Gutter shall be removed.

Plans quantity shall be the basis of payment unless changes are ordered by the Engineer. Any water required for slope shaping shall be incidental to the contract unit price per cubic yard for Unclassified Excavation.

It is estimated that 158.8 CuYd of Unclassified Excavation will be required for PCN I2VG. It is estimated that 132.3 CuYd of Unclassified Excavation will be required for PCN I2VH.

All excess material shall be properly disposed of as per the Waste Disposal Note.

REMOVE AND REPLACE TOPSOIL

Prior to beginning operations, where topsoil will be disturbed behind the Curb and Gutter, a 4” depth of topsoil shall salvaged and stockpiled on the shoulder.

Following completion of operations, topsoil shall be placed back adjacent to the Curb and Gutter.

The estimated amount of topsoil to be removed and replaced for PCN I2VG is 9.6 CuYd. The estimated amount of topsoil to be removed and replaced for PCN I2VH is 9.2 CuYd.

All cost associated with removing and replacing the topsoil along areas to be resurfaced shall be incidental to the lump sum price for Remove and Replace Topsoil.

REMOVAL OF EXISTING ASPHALT CONCRETE PAVEMENT

Where asphalt pavement is adjacent to Curb and Gutter or P Gutter replacement areas, a 1-foot width of asphalt either in front of or behind the Curb and Gutter or P Gutter shall be removed.

Existing asphalt concrete and/or existing asphalt concrete patch work to be removed is included in the quantity for Remove Asphalt Concrete Pavement. The Contractor shall dispose of the concrete pavement and asphalt concrete at a site approved by the Engineer.

TABLE OF ASPHALT CONCRETE PAVEMENT REMOVAL

Location	Station	to	Station	L/R	Quantity (SqYd)
Project No. 0240E-442 I2VG					
	447+60.2		448+70.0	R	13.4
	448+73.8		449+48.3	R	13.6
	449+48.3		455+91.0	R	71.4
				Total:	98.4
Project No. 0240W-442 I2VH					
	447+60.2		448+72.03	L	13.4
	448+73.8		449+22.7	L	12.5
	449+22.7		455+55.7	L	70.3
	457+17.2		458+15.9	L	15.8
	459+05.3		460+06.9	L	22.6
	462+08.5		462+83.6	L	16.7
				Total:	151.3

TABLE OF CONCRETE CURB AND GUTTER REMOVAL

Location	Station	to	Station	L/R	Quantity (Ft)
Project No. 0240E-442 I2VG					
	448+73.8		449+48.3	L/R	131.5
	449+48.3		455+91.0	R	642.7
					774.2
Project No. 0240W-442 I2VH					
	448+73.8		449+22.7	L	114.4
	449+22.7		455+55.7	L	633.0
	457+60.8		458+15.9	L	55.1
	459+05.3		459+20.3	L	15.0
	459+97.3		460+06.9	L	9.6
				Total:	827.1

TABLE OF CONCRETE GUTTER REMOVAL

Location	Station	to	Station	L/R	Quantity (Ft)
Project No. 0240W-442 I2VH					
	457+17.2		457+60.8	L	43.6
	459+20.3		459+97.3	L	77.0
	462+08.5		462+83.6	L	75.1
				Total:	195.7

EXISTING DROP INLETS

The Contractor shall take care not to damage the existing drop inlets.

Any damage to the existing drop inlets shall be repaired by the Contractor at no additional cost to the State.

At the west end of the project the Contractor shall take care to shape the Base Course and place the Asphalt Concrete Composite in such a manner as to provide positive drainage toward the existing drop inlets.

BASE COURSE

Aggregate for Base Course shall conform to the requirements of the Standard Specifications for Base Course, except that Base Course for Backfill shall be compacted to the satisfaction of the Engineer.

Base Course shall be placed to a thickness of 1 foot in areas that are to receive Asphalt Concrete Composite.

Included in the Estimate of Quantities are 183.0 tons of Base Course and 3.6 M. gallons of Water for Granular Material for PCN I2VG. Included in the Estimate of Quantities are 111.7 tons of Base Course and 2.0 M. gallons of Water for Granular Material for PCN I2VH.

ASPHALT CONCRETE COMPOSITE

Mineral aggregate for the Asphalt Concrete Composite shall conform to the requirements of the Standard Specifications for Class E, Type 1.

All other requirements in the Standard Specifications for Asphalt Concrete Composite shall apply.

The asphalt binder used in the mixture shall be PG 64-22, PG 64-28 or PG 64-34 Asphalt Binder.

Asphalt Concrete Composite shall be placed at a depth of 6 inches.

TABLE OF CONCRETE ASPHALT CONCRETE COMPOSITE

Location	Station	to	Station	L/R	Quantity (Ton)
Project No. 0240E-442					
I2VG					
	447+60.2		448+70.0	R	36.7
	448+73.8		449+48.3	L/R	36.2
	449+48.3		455+91.0	R	23.8
				Total:	96.7
Project No. 0240W-442					
I2VH					
	448+72.0		449+22.7	L	26.8
	449+22.7		455+55.7	L	23.4
	457+17.2		458+15.9	L	5.2
	459+05.3		460+06.9	L	7.5
	462+08.5		462+83.6	L	5.6
				Total:	68.5

TABLE OF TYPE B68 CONCRETE CURB AND GUTTER

Location	Station	to	Station	L/R	Quantity (Ft)
Project No. 0240E-442					
I2VG					
	448+73.8		449+48.3	L/R	110.6
	449+48.3		455+91.0	R	642.7
				Total:	753.3
Project No. 0240W-442					
I2VH					
	448+73.8		449+22.7	L	95.5
	449+22.7		455+55.7	L	633.0
	457+60.8		458+15.9	L	55.1
	459+05.3		459+20.3	L	15.0
	459+97.3		460+06.9	L	9.6
				Total:	808.2

TABLE OF TYPE P8 CONCRETE GUTTER

Location	Station	to	Station	L/R	Quantity (Ft)
Project No. 0240W-442					
I2VH					
	457+17.2		457+60.8	L	43.6
	459+20.3		459+97.3	L	77.0
	462+08.5		462+83.6	L	75.1
				Total:	195.7

TRAFFIC CONTROL – GENERAL NOTES

1. Requests to deviate from the sequence of operations shall be submitted in writing to the Engineer for review. Approval of an alternate sequence of operations will only be allowed when the proposed changes meet with the Department's intent for traffic control and sequencing of the work. An alternate sequence shall be submitted for review a minimum of one week prior to potential implementation.

2. Unless otherwise stated in these plans, no work will be allowed during hours of darkness. Hours of darkness are defined, as ½ hour after sunset until ½ hour before sunrise.

3. Storage of vehicles and equipment shall be as near the right-of-way as possible. Contractor's employees should mobilize at a location off the right-of-way and arrive at the work sites in a minimum number of vehicles necessary to perform the work. Indiscriminate driving and parking of vehicles within the right-of-way will not be permitted. Any damage of the vegetation, surfacing, embankment, delineators, and existing signs resulting from such indiscriminate use shall be repaired and/or restored by the Contractor, at no expense to the State, and to the satisfaction of the Engineer.

TRAFFIC CONTROL – GENERAL NOTES (CONTINUED)

4. Existing guide, route, informational logo, regulatory, and warning signs shall be temporarily reset and maintained during construction. Removing, relocating, covering, salvaging and resetting of existing traffic control devices, including delineation, shall be the responsibility of the Contractor. Non-applicable signing shall be covered or removed during periods of inactivity. Periods of inactivity shall be defined as no work taking place for a period of more than 36 hours. The cost of removing or covering non-applicable signs shall be incidental to the contract lump sum price for, Traffic Control, Miscellaneous.

5. Construction signing mounted on portable supports shall not be used for a duration of more than 3 days, unless approved by the Engineer. Construction signing that remains in the same location for more than 3 days shall be mounted on fixed location, ground mounted, breakaway supports.

6. If inappropriate/conflicting pavement markings exist, the markings shall be removed and replaced with applicable temporary pavement markings when the work duration is more than 3 days. When the work duration is less than 3 days, the channelizing devices in the area where the pavement markings conflict shall be placed at a spacing of ½ G. Pavement marking removals shall be paid for at the contract unit price for Remove Pavement Marking, 4" or Equivalent. Temporary Pavement Marking shall be paid for at the contract unit bid price for Temporary Pavement Marking. The additional channelizing devices shall be incidental to the contract lump sum price for Traffic Control, Miscellaneous.

7. The quantity of Signs paid for will be for the greatest number of installations per sign in place at any one time regardless of the number of set-ups on the project.

8. Any delineators and signs damaged or lost shall be replaced by the Contractor at no cost to the State.

9. All materials and equipment shall be stored a minimum distance of 30' from the traveled way during nonworking hours.

10. The Contractor shall provide documentation that all breakaway sign supports comply with FHWA NCHRP 350 or MASH crash-worthy requirements. The Contractor shall provide installation details at the preconstruction meeting for all breakaway sign support assemblies.

11. The Contractor shall be required to have a person available 24 hour/day, 7 days/week to maintain traffic control devices. The name and cellular telephone number of this individual shall be given to the Engineer at the preconstruction meeting.

12. The Contractor or designated traffic control subcontractor shall make night inspections at the initial set up of traffic control and every week thereafter to ensure the adequacy, legibility and reflectivity of each sign and device. A written summary of each inspection shall be given to the Engineer within 24 hours after completion of the inspection. The cost for the nighttime inspection work shall be incidental to the contract lump sum price for Traffic Control, Miscellaneous.

TRAFFIC CONTROL – GENERAL NOTES (CONTINUED)

13. Vehicles working in traffic or alongside traffic shall be equipped with a flashing amber light visible from all directions. The amber light shall be mounted on the uppermost part of the contractor's vehicle. Lights must have peak intensity within the range of 40 to 400 candelas and must flash at 75 ± 15 flashes per minute. Vehicle flasher/hazard lights are not acceptable.

14. All construction operations shall be conducted in the general direction of traffic movement.

15. If there is a discrepancy between the traffic control plans, standard plates, and the MUTCD – whichever is more stringent shall be used.

16. Temporary Road Markers shall be used for lane closure tapers or lane shift tapers. Temporary Road Markers used for tapers and shifts will not be measured for payment and will be incidental to the contract lump sum price for Traffic Control, Miscellaneous.

17. Drums are required in all lane closure tapers.

18. The Contractor shall maintain a minimum of 12' of travel width in each direction during non-working hours. Channelizing devices from the work area shall be shouldered and placed in accordance with Standard Plate 634.03 during non-working hours.

19. The Contractor shall maintain access to businesses at all times during construction.

20. If parking spaces are disrupted during construction the Contractor shall coordinate with the business owner to provide alternative parking.

INVENTORY OF TRAFFIC CONTROL DEVICES

Project No. 0240E-442 – PCN I2VG

SIGN CODE	SIGN SIZE	DESCRIPTION	NUMBER REQUIRED	UNITS PER SIGN	UNITS
G20-2	36" x 18"	END ROAD WORK	5	17	85
W8-6	48" x 48"	TRUCK CROSSING	1	34	34
W20-1	48" x 48"	ROAD WORK AHEAD	5	34	170
W20-4	48" x 48"	ONE LANE ROAD AHEAD	2	34	68
W20-7a	48" x 48"	FLAGGER	2	34	68
W21-5	48" x 48"	SHOULDER WORK	2	34	68
W21-5a	48" x 48"	SHOULDER CLOSED	1	34	34
				TOTAL UNITS	**527**

Project No. 0240E-442 – PCN I2VH

SIGN CODE	SIGN SIZE	DESCRIPTION	NUMBER REQUIRED	UNITS PER SIGN	UNITS
G20-2	36" x 18"	END ROAD WORK	5	17	85
W8-6	48" x 48"	TRUCK CROSSING	1	34	34
W20-1	48" x 48"	ROAD WORK AHEAD	5	34	170
W20-4	48" x 48"	ONE LANE ROAD AHEAD	2	34	68
W20-7a	48" x 48"	FLAGGER	2	34	68
W21-5	48" x 48"	SHOULDER WORK	2	34	68
W21-5a	48" x 48"	SHOULDER CLOSED	2	34	68
				TOTAL UNITS	**561**

PERMANENT SIGNING

The Contractor shall furnish all signs, posts, stiffeners, bases, hardware, and labor for installation of permanent signs in size, type, and quantity as shown in these plans and/or as required by the Engineer.

The Contractor shall provide all labor and equipment necessary to install permanent signing, remove existing signs, and reset existing signs as detailed in these plans and/or as required by the Engineer. Payment for furnishing and installing permanent signs will be paid for the contract unit price for each type of sign based on sheeting requirements per square foot of sign. All signs shall have ASTM D4956-04 Type IX or XI (Super/Very High Intensity) sheeting as noted in these plans. Payment for new signposts, hardware, bases, and labor will be made at the contract unit price per foot for 2.0" x 2.0" perforated tube post. Breakaway post details regarding posts, hardware, and bases shall be followed as per the manufacturer's recommendations. The sign post contract items shall include post bases and all hardware. The lengths of the posts in the sign tables are approximate lengths only. The post lengths shall be verified by the Contractor. The Contractor is urged to cut posts to length on job site after site by site verification of post length.

The Contractor shall use Telespar brand (or equivalent) posts and bases on all new standard highway signs as approved by the Engineer. All post materials shall conform to Section 982 of the Standard Specifications, and be in accordance with ASTM specifications. Signs designated as requiring a shear slip base shall have a 4 foot long base assembly with a shear breakaway base connecting the base to the signpost. The height of the post shall not exceed the minimum height needed by more than 0.5 feet. Any portion that extends above the sign shall be cut off. No separate payment will be made for cutting the post or for that length cut off. All posts and bases shall by accompanied by Certificates of Compliance and shall meet all safety standards as set forth in the current edition of the Manual on Uniform Traffic Control Devices (MUTCD).

The Contractor shall stake the signs and the Engineer will verify the location prior to installation. The lateral distance from the roadway and the height of the sign shall be established by the Contractor according to the Permanent Signing Typicals, as well as the Standard Plates in the plans and the MUTCD.

The Contractor shall coordinate the removal of signs with the Traffic Control sequencing of these plans. Existing signing shall be replaced, left in place, or temporarily covered as needed to safely direct traffic through the project or as directed by the Engineer.

DATE DECAL

The Contractor shall affix a state furnished date decal to each new sign installed. Each decal is an approximately 2" X 2" self-adhesive sticker with removable paper backing and black numerals on a white background. The date decal displays the last two digits of the year the sign was manufactured (as illustrated).

13

DATE DECAL (CONTINUED)

One decal shall be placed in the extreme lower left corner of the back of flat aluminum signs.

Sign supports or other obstructions shall not block the view of the date decal upon completion of the sign installation.

Cost for installing of date decal on new signs shall be incidental to the contract unit price for the various signing bid items.

PERFORATED TUBE POST

Payment for 2.0" x 2.0" perforated tube post shall include all cost for labor, equipment, and materials necessary to complete the following work:

1. Furnish all posts, stiffeners, breakaway bases, soil stabilizers, and hardware.
2. Assembly and installation of breakaway base sign supports as per details shown in these plans.
3. Assembly of sign(s) to sign post as per erection details for Highway Signs as shown in these plans.
4. Installation of signpost and sign(s).

HARDWARE

Aluminum U-Channel stiffeners shall be used on all standard highway signs greater than or equal to 36" in width and shall conform to Alloy 6063-T6 or 6061-T6. The U-Channel shall be 2 inches in width and free of holes. The U-Channel stiffeners shall also be used to connect various signs and perforated tube posts together so that an entire sign can be erected as a single installation. Stiffeners may be fastened to signs by use of 1/4" drive rivets with a minimum of one on each end and one centered between each post. Installation of the stiffeners shall be incidental to other contract items.

A 3/8" diameter straight bolt (Grade 8) shall be used in all breakaway shear bases for the 2.5" perforated tube posts. All other perforated tube signpost base material shall be fastened with 5/16" diameter corner bolts (Grade 2).

All 2.0" perforated tube signposts shall have a soil stabilizer attached to the base. Soil stabilizers shall be MPJ sign wedge style or equivalent.

FURNISH & INSTALL FLAT ALUMINUM SIGNS, NON-REMOVABLE COPY SUPER/VERY HIGH INTENSITY

Measurement of sign areas will include payment for the entire sign blank before trimming for rounded corners. The square unit measurement for each sign shall be as shown in the table of permanent signing. The payment shall include all labor (including installing date decals), equipment, and materials to complete the work, and shall be paid for at the contract unit price per square foot for Flat Aluminum Sign/Non-Removable Copy Super/Very High Intensity.

SHEETING REQUIREMENTS

All legend and border utilizing the color black shall be vinyl or screen printed black, non-reflectorized material. All other legend and border shall be of same type of sheeting as the background of the same sign. All signs shall have micro-cube corner prismatic reflectorized background, Type IX and XI as per AASHTO designation M 268 (ASTM D4956-04).

SIGN LEGEND, BORDER, BACKGROUND, AND MOUNTING

All sign material shall comply with Section 982 of the Standard Specifications.

The sign colors shall be as stipulated in the MUTCD.

EROSION CONTROL

Areas disturbed or damaged shall be seeded, fertilized and mulched.

All permanent seed shall be planted in the topsoil at a depth of ¼" to ½".

All seed broadcast must be raked or dragged in (incorporated) within the top ¼" to ½" of topsoil when possible. Hand raking may be required. This requirement may be waived by the Engineer during construction when raking or dragging is deemed not feasible by conventional methods.

Type F Seed Mixture shall be placed at a rate of 5 Pounds/1000 SqFt.

Type F Permanent Seed Mixture shall consist of the following:

Grass Species	Variety	Pure Live Seed (PLS) (Pounds/1000 SqFt)
Western Wheatgrass	Flintlock, Rodan, Rosana	1.3
Green Needlegrass	Lodorm	0.8
Sideoats Grama	Butte, Killdeer, Pierre, Trailway	0.6
Blue Grama	Bad River, Willis	0.4
Oats or Spring Wheat: April through July; Winter Wheat: August through November		1.9
Total:		5.0

The Contractor shall apply an all-natural slow release fertilizer prior to seeding or placing sod. The all-natural fertilizer shall have a minimum guaranteed analysis of 4-6-4 and be USDA Certified BioBased. It should provide a minimum of 4% (N) nitrogen with a minimum water insoluble nitrogen (WIN) fraction of 3.2%, a minimum of 6% (P_2O_5) available phosphate, a minimum of 4% (K_2O) soluble potash, and a maximum carbon to nitrogen ratio (C:N ratio) of 5:1. The all-natural fertilizer shall be free of weed-seed and pathogens accomplished through thermophilic composting, and not mechanical or chemical sterilization, to assure presence of beneficial soil microbiology. The fertilizer shall have a near neutral pH, a low salt index, a low biological oxygen demand, contain organic humic and fulvic acids, and have high aerobic organism counts. The fertilizer shall also be stable, free of bad odors, and be unattractive as a food source for animals. It should also be in a granular form that is easily spread.

EROSION CONTROL (CONTINUED)

The application rate is 34 pounds per 1,000 square feet.

Fiber mulch shall be applied in a separate operation following permanent seeding.

An additional 2% by weight of tackifier shall be added to the fiber mulch product selected from the list below. If the product selected has guar gum tackifier included, then the additional 2% of tackifier shall be guar gum. If the product selected has synthetic tackifier included, then the additional 2% of tackifier shall be synthetic.

Fiber mulch shall be applied at the rate of 2000 pounds per acre.

The Contractor shall allow the fiber mulch to cure a minimum of 18 hours prior to watering or any storm event to ensure proper cohesion between the soil and fiber particles.

All costs for the additional tackifier added to the fiber mulch including labor, equipment, and materials shall be incidental to the contract lump sum price for Erosion Control.

The fiber mulch used on this project shall be one from the list below:

Product	Manufacturer
Mat-Fiber Plus	Mat, Inc. Floodwood, MN Phone: 1-888-477-3028 www.matinc.biz
Conwed Hydro Mulch 2000	Profile Products LLC Buffalo Grove, IL Phone: 1-800-366-1180 www.conwedfibers.com
EcoFibre Plus Tackifier	Profile Products LLC Buffalo Grove, IL Phone: 1-800-366-1180 www.profile-eco.com
Terra Wood with Tacking Agent 3	Profile Products LLC Buffalo Grove, IL Phone: 1-800-726-6371 www.terra-mulch.com
Bindex Wood WT	American Excelsior Co. Arlington, TX Phone: 1-800-777-7645 www.curlex.com
Second Nature Wood Fiber Mulch Plus	Central Fiber LLC Canton, OH Phone: 1-888-452-2630 www.centralfiber.com

EROSION CONTROL (CONTINUED

Approximately 3581 SqFt will require permanent seeding. The Engineer may adjust this quantity up or down depending on damage to the area surrounding the project.

All costs associated with permanent seeding, fertilizing, and fiber mulching shall be incidental to the contract lump sum for price for Erosion Control.

CURB AND GUTTER LAYOUT

STATE OF SOUTH DAKOTA	PROJECT	SHEET	TOTAL SHEETS
	024E-452 024W-452	7	17

Plotting Date: 05/09/2013

1. 449+48.3 - 64.8' R - Back
   Begin 75' Radius
   Type B68 C&G
   (Match Existing Elevation)

2. 448+73.8 - 3.1' L
   End 75' Radius
   Type B68 C&G
   Begin Straight
   Type B68 C&G
   (Match Existing Elevation)

3. 448+72.7 - 14.9' L
   End Straight
   Type B68 C&G
   Begin 50' Radius
   Type B68 C&G
   (Match Existing Elevation)

4. 449+22.7 - 69.9' L
   End 50' Radius
   Type B68 C&G
   Begin Type B68 C&G
   (Match Existing Elevation)

6. 449+48.3 - 64.8' R - Forward
   Begin Straight
   Type B68 C&G
   (Match Existing Elevation)

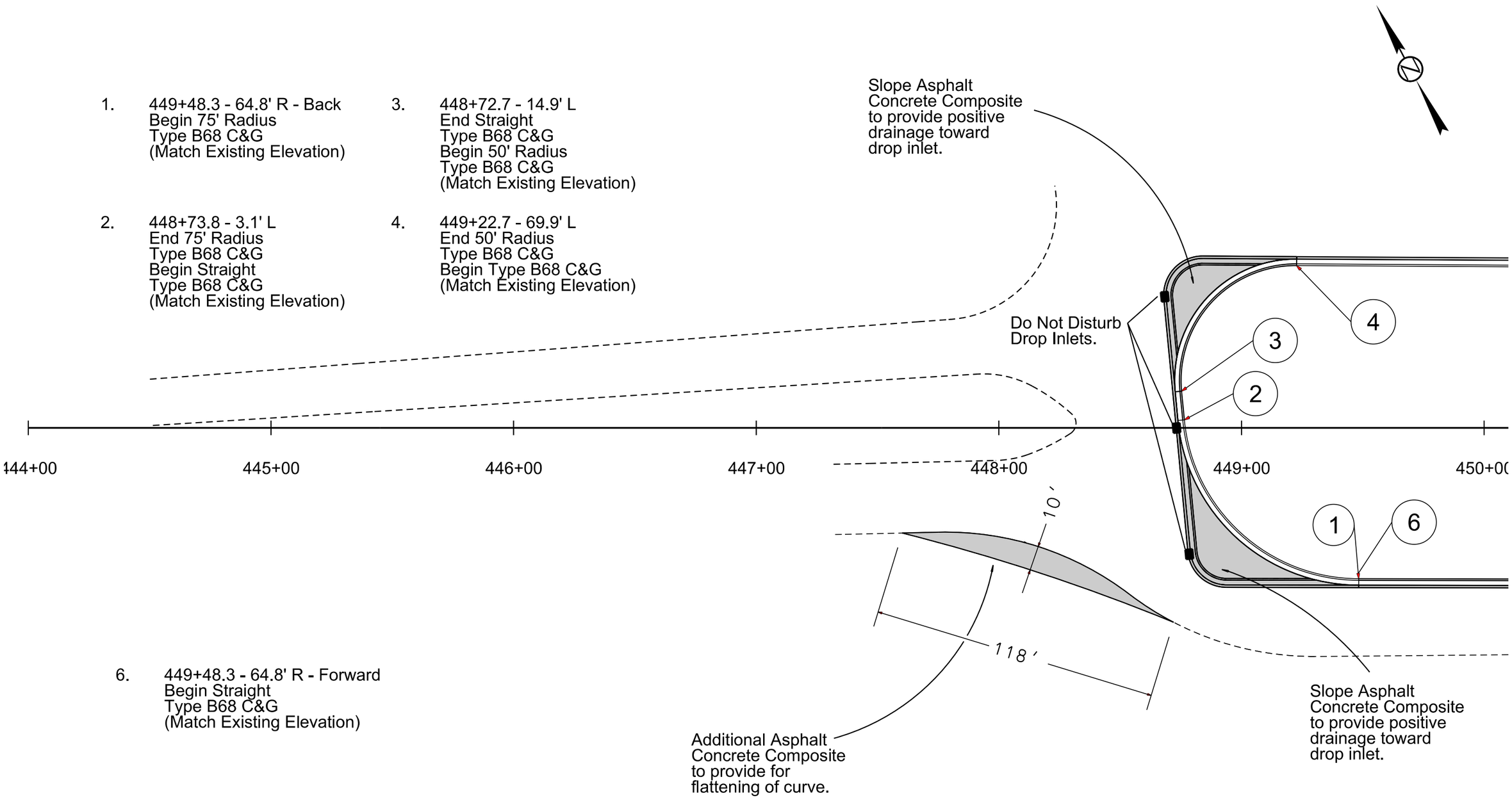

Plot Scale - 1:40

Plotted From - trnc12608

File - ...\plan1.dgn

CURB AND GUTTER LAYOUT

STATE OF SOUTH DAKOTA	PROJECT	SHEET	TOTAL SHEETS
	024E-452 024W-452	8	17

Plotting Date: 05/09/2013

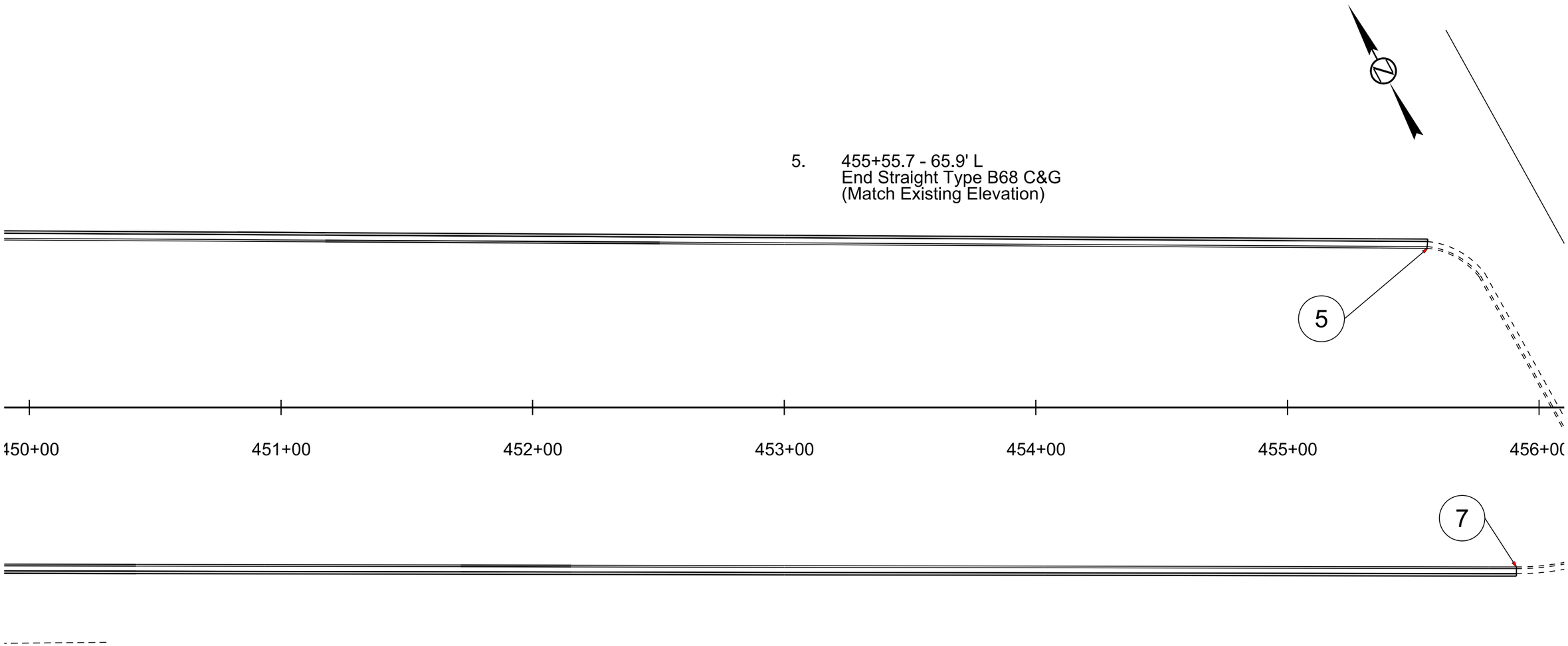

5. 455+55.7 - 65.9' L
End Straight Type B68 C&G
(Match Existing Elevation)

7. 455+91.0 - 66.0' R
End Straight Type B68 C&G
(Match Existing Elevation)

Asphalt Concrete Composite
(See Table of Asphalt Concrete Composite for Details)

Plot Scale - 1:40

Plotted From - trrc12608

File - ...\plan2.dgn

CURB AND GUTTER LAYOUT

STATE OF SOUTH DAKOTA	PROJECT	SHEET	TOTAL SHEETS
	024E-452 024W-452	9	17

Plotting Date: 05/09/2013

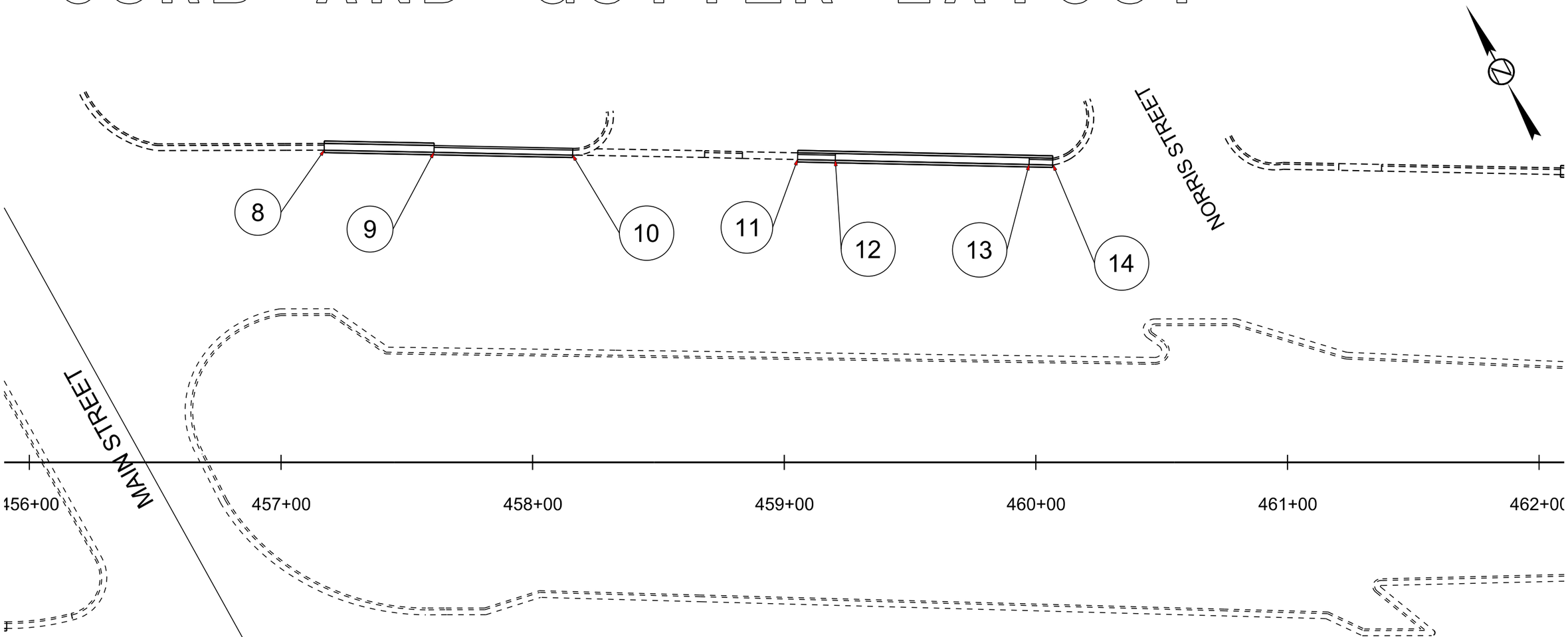

8. 457+17.2 - 124.1' L
Begin Straight Type P8 Gutter
(Match Existing Elevation)

9. 457+60.8 - 123.3' L
End Straight Type P8 Gutter
Begin Straight Type B68 C&G
(Match Existing Elevation)

10. 458+15.9 - 122.2' L
End Straight Type B68 C&G
(Match Existing Elevation)

11. 459+05.3 - 120.4' L
Begin Straight Type B68 C&G
(Match Existing Elevation)

12. 459+20.3 - 120.1' L
End Straight Type B68 C&G
Begin Straight Type P8 Gutter
(Match Existing Elevation)

13. 459+97.3 - 118.4' L
End Straight Type P8 Gutter
Begin Straight Type B68 C&G
(Match Existing Elevation)

14. 460+06.9 - 118.2'L
End Straight Type B68 C&G
(Match Existing Elevation)

Asphalt Concrete Composite
(See Table of Asphalt Concrete Composite for Details)

Plot Scale - 1:40
Plotted From - trrc12608
File - ...\plan3.dgn

CURB AND GUTTER LAYOUT

STATE OF SOUTH DAKOTA	PROJECT	SHEET	TOTAL SHEETS
	024E-452 024W-452	10	17

Plotting Date: 05/09/2013

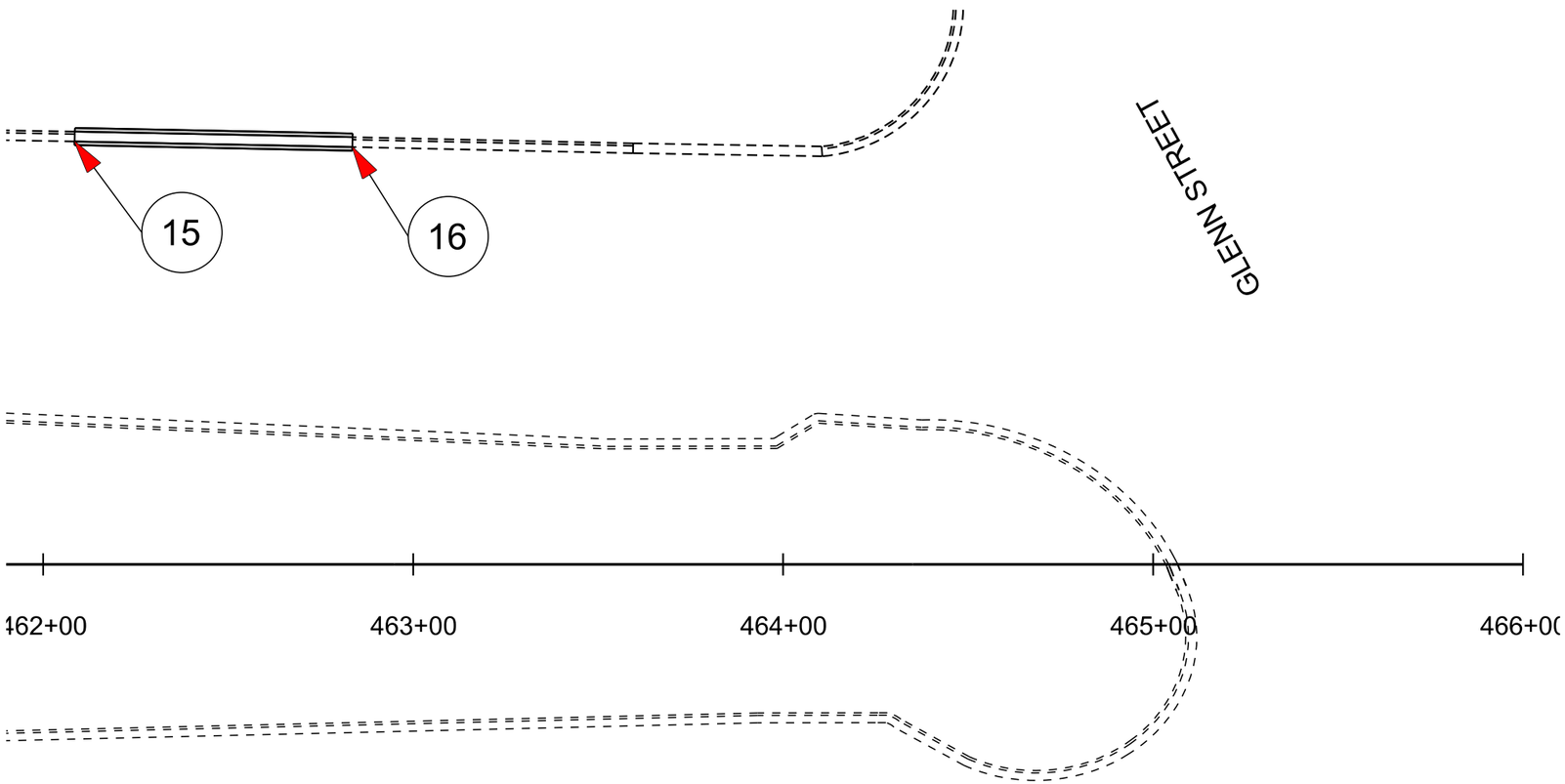

15. 462+08.5 - 114.4' L
Begin Straight Type P8 Gutter
(Match Existing Elevation)

16. 462+83.6 - 112.9' L
End Straight Type P8 Gutter
(Match Existing Elevation)

Asphalt Concrete Composite
(See Table of Asphalt Concrete Composite for Details)

Plot Scale - 1:40

Plotted From - trrc12608

File - ...\plan4.dgn

MARKING & SIGNING LAYOUT

STATE OF SOUTH DAKOTA	PROJECT	SHEET	TOTAL SHEETS
	024E-452 024W-452	11	17

Plotting Date: 05/09/2013

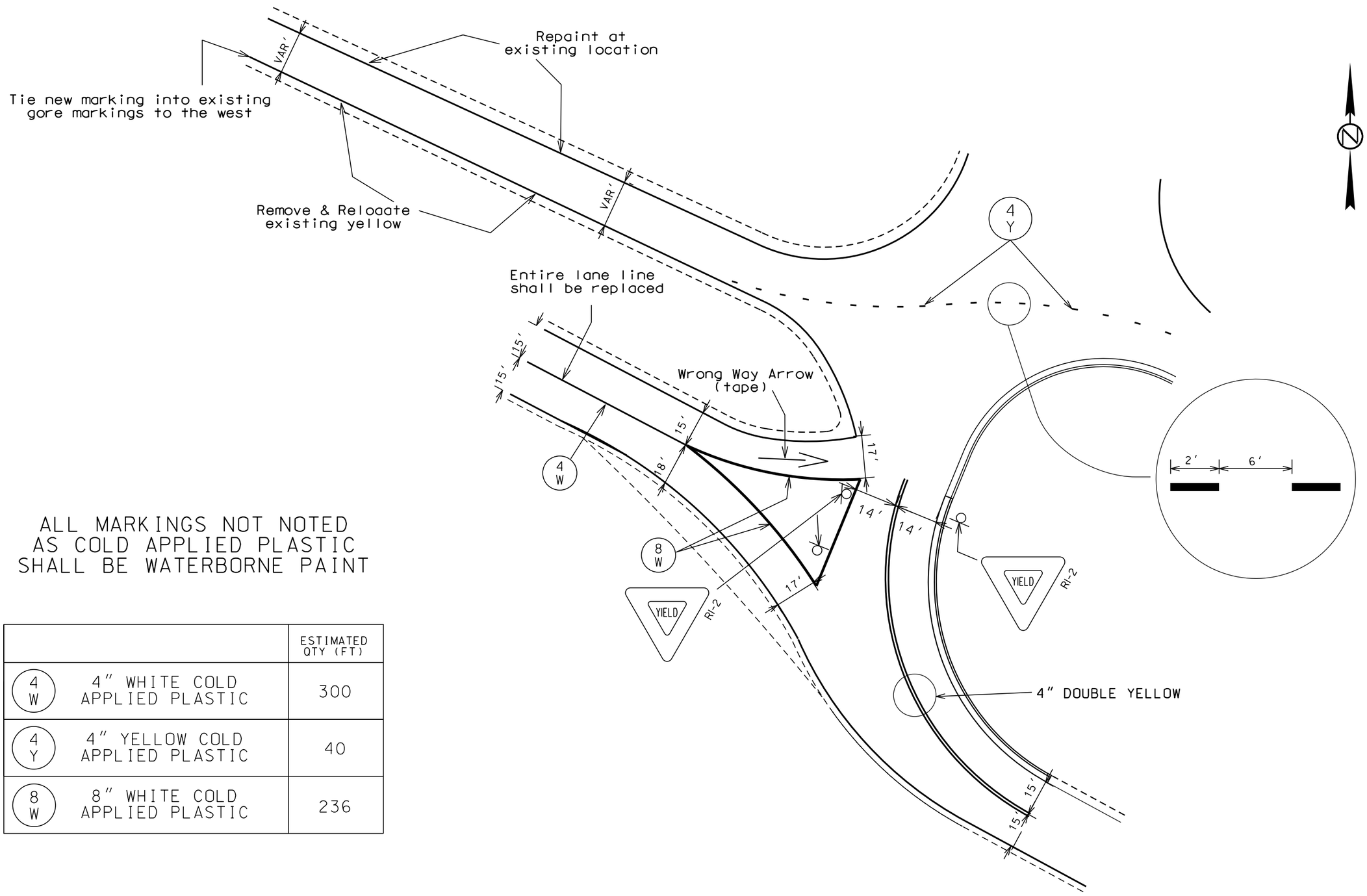

ALL MARKINGS NOT NOTED AS COLD APPLIED PLASTIC SHALL BE WATERBORNE PAINT

	ESTIMATED QTY (FT)
4 W — 4" WHITE COLD APPLIED PLASTIC	300
4 Y — 4" YELLOW COLD APPLIED PLASTIC	40
8 W — 8" WHITE COLD APPLIED PLASTIC	236

Plot Scale - 1:40.5

Plotted From - trrc12608

File - ...\WallC&G_MarkingSigning.dgn

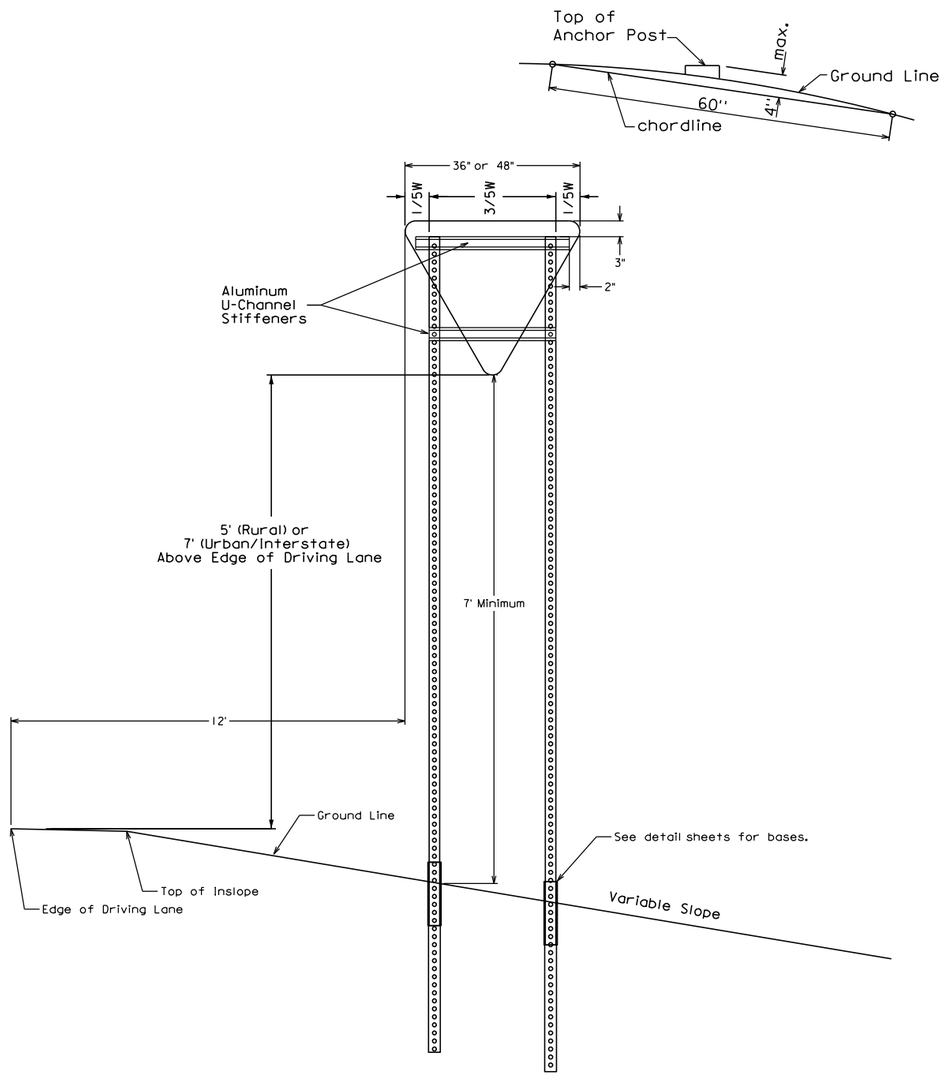

(Drawing shown from face of sign)

SIGN BASE DETAILS FOR A 2" SIGN POST

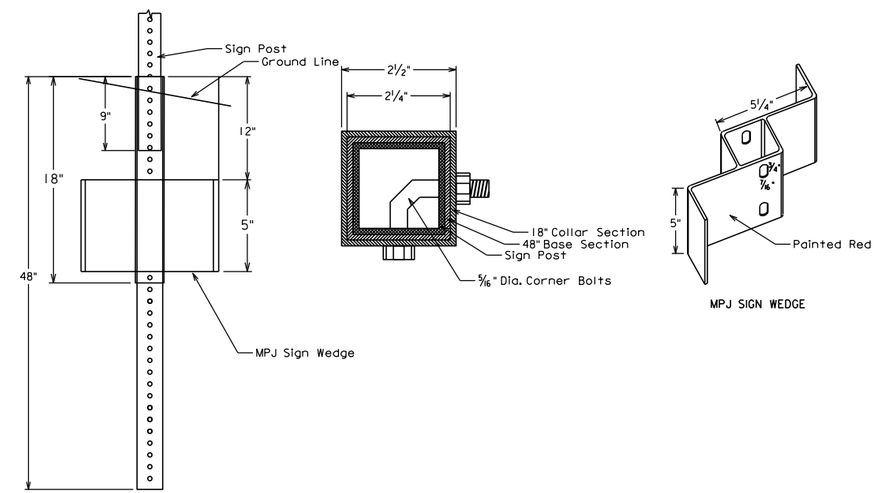

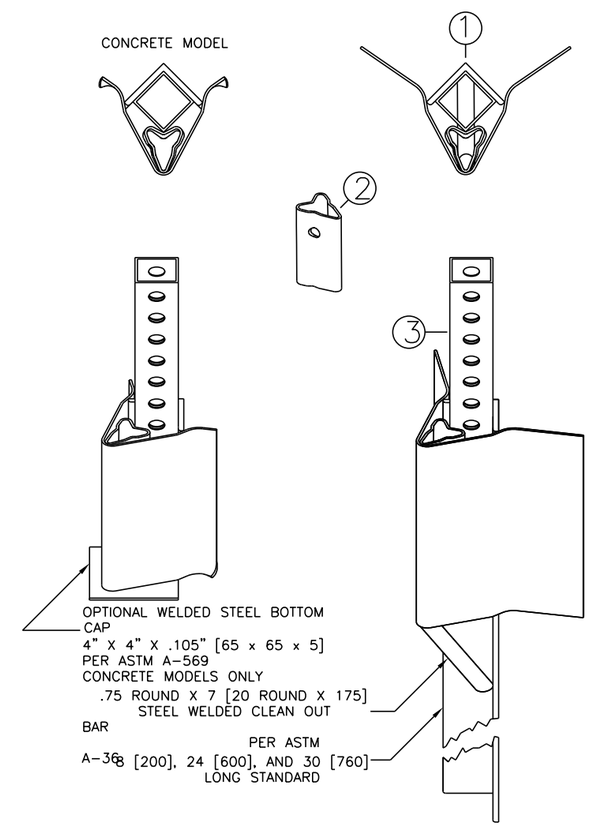

PAVEMENT MARKING TYPICAL

WRONG-WAY ARROWS

STATE OF SOUTH DAKOTA	PROJECT	SHEET	TOTAL SHEETS
	024E-452 024W-452	13	17

Plotting Date: 05/09/2013

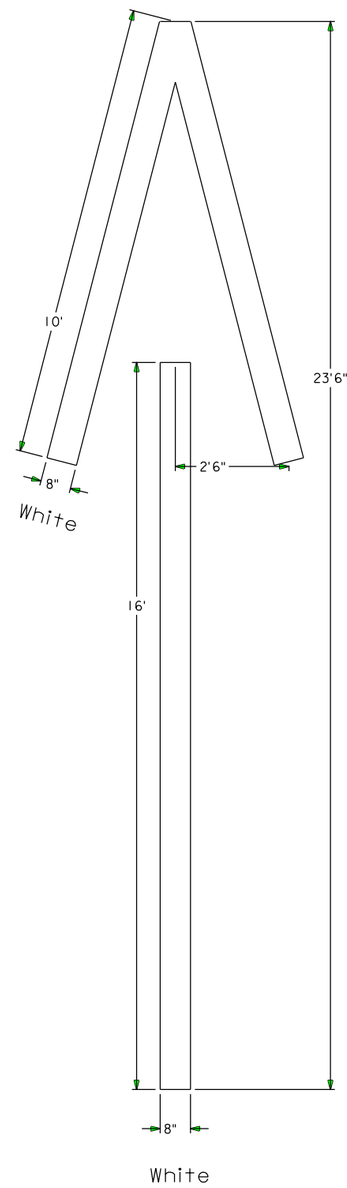

Plot Scale - 1:200

Plotted From - trrc12608

File - ...\WrongWayArrows.dgn

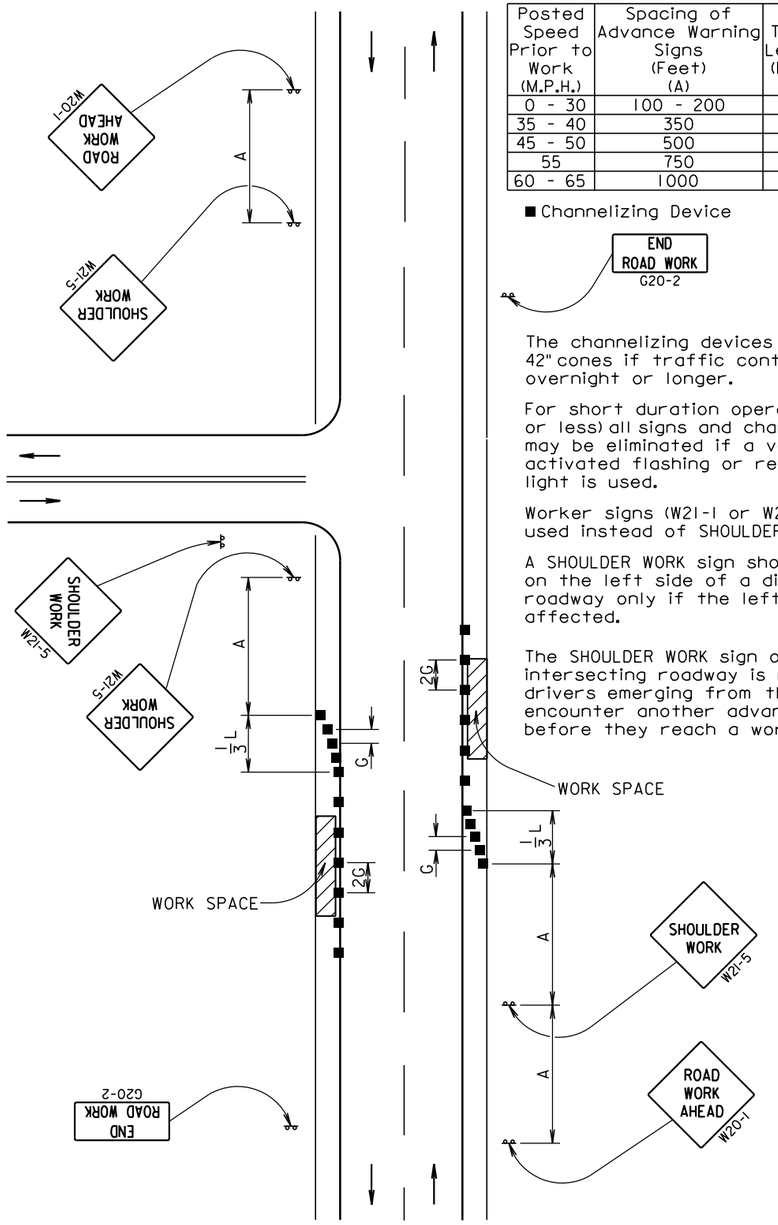

Posted Speed Prior to Work (M.P.H.)	Spacing of Advance Warning Signs (Feet) (A)	Taper Length (Feet) (L)	Spacing of Channelizing Devices (Feet) (G)
0 - 30	100 - 200	180	25
35 - 40	350	320	25
45 - 50	500	600	50
55	750	660	50
60 - 65	1000	780	50

■ Channelizing Device

END ROAD WORK
G20-2

The channelizing devices shall be drums or 42" cones if traffic control must remain overnight or longer.

For short duration operations (1 hour or less) all signs and channelizing devices may be eliminated if a vehicle with an activated flashing or revolving yellow light is used.

Worker signs (W21-1 or W21-1a) may be used instead of SHOULDER WORK signs.

A SHOULDER WORK sign should be placed on the left side of a divided or one-way roadway only if the left shoulder is affected.

The SHOULDER WORK sign on an intersecting roadway is not required if drivers emerging from that roadway will encounter another advance warning sign before they reach a work activity area.

February 14, 2011

Published Date: 1st Qtr. 2013	SDDOT	GUIDES FOR TRAFFIC CONTROL DEVICES WORK ON SHOULDERS	PLATE NUMBER 634.03 Sheet 1 of 1

Posted Speed Prior to Work (M.P.H.)	Spacing of Advance Warning Signs (Feet) (A)	Spacing of Channelizing Devices (Feet) (G)
0 - 30	200	25
35 - 40	350	25
45 - 50	500	50
55	750	50
60 - 65	1000	50

Flagger

■ Channelizing Device

For low-volume traffic situations with short work zones on straight roadways where the flagger is visible to road users approaching from both directions, a single flagger may be used.

The ROAD WORK AHEAD and the END ROAD WORK signs may be omitted for short duration operations (1 hour or less).

For tack and/or flush seal operations, when flaggers are not being used, the FRESH OIL sign (W21-2) shall be displayed in advance of the liquid asphalt areas.

Flashing warning lights and/or flags may be used to call attention to the advance warning signs.

The channelizing devices shall be drums or 42" cones.

Channelizing devices are not required along the centerline adjacent to work area when pilot cars are utilized for escorting traffic through the work area.

END ROAD WORK
G20-2

Channelizing devices and flaggers shall be used at intersecting roads to control intersecting road traffic as required.

The buffer space should be extended so that the two-way traffic taper is placed before a horizontal or vertical curve to provide adequate sight distance for the flagger and queue of stopped vehicles.

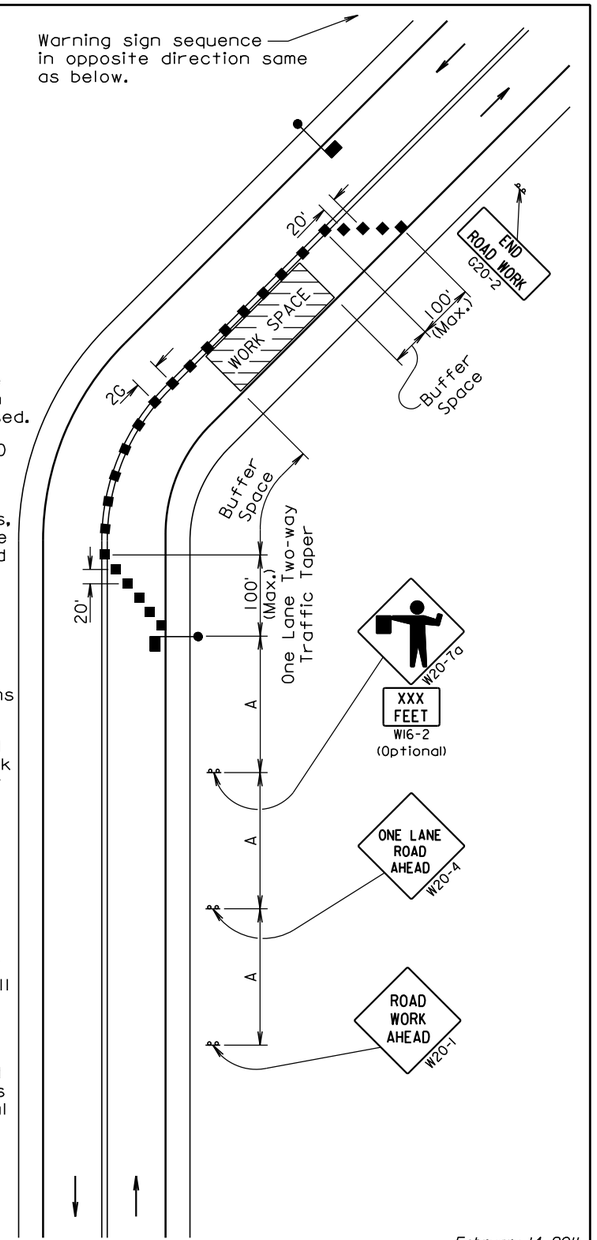

February 14, 2011

Published Date: 1st Qtr. 2013	SDDOT	GUIDES FOR TRAFFIC CONTROL DEVICES LANE CLOSURE WITH FLAGGER PROVIDED	PLATE NUMBER 634.23 Sheet 1 of 1

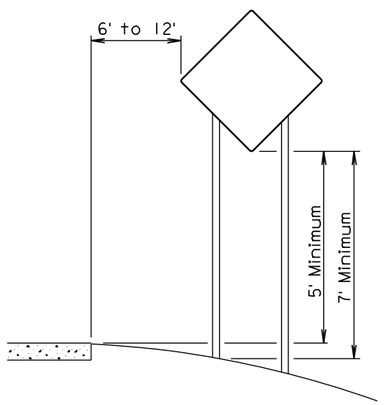

RURAL DISTRICT

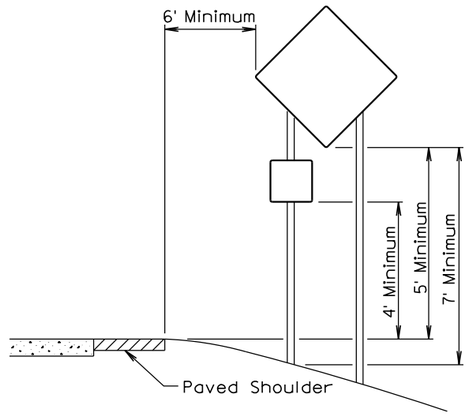

RURAL DISTRICT WITH SUPPLEMENTAL PLATE

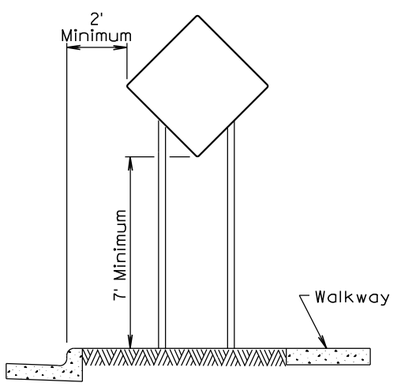

URBAN DISTRICT

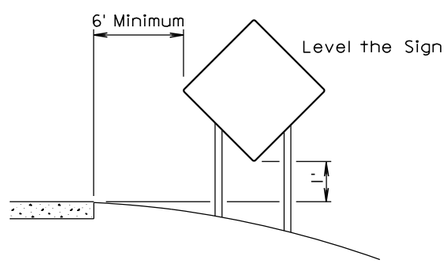

RURAL DISTRICT
3 DAY MAXIMUM

February 14, 2011

Published Date: 1st Qtr. 2013	SDDOT	CRASHWORTHY SIGN SUPPORTS (Typical Construction Signing)	PLATE NUMBER 634.85
			Sheet 1 of 1

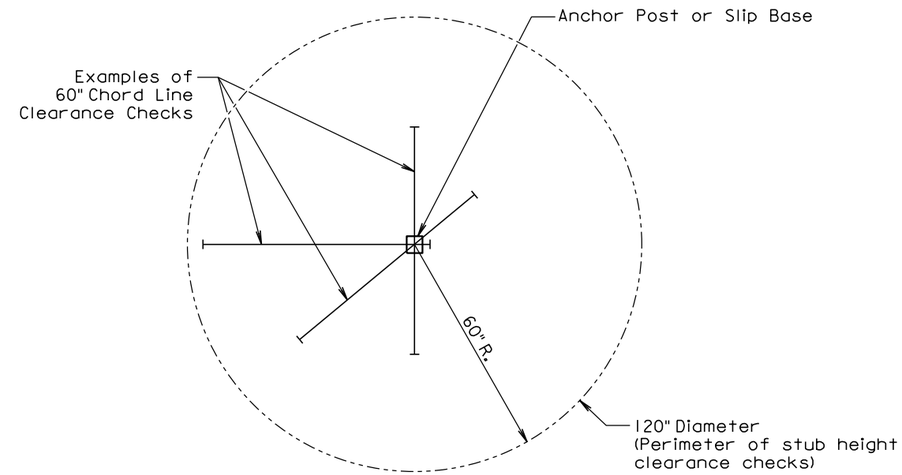

PLAN VIEW
(Examples of stub height clearance checks)

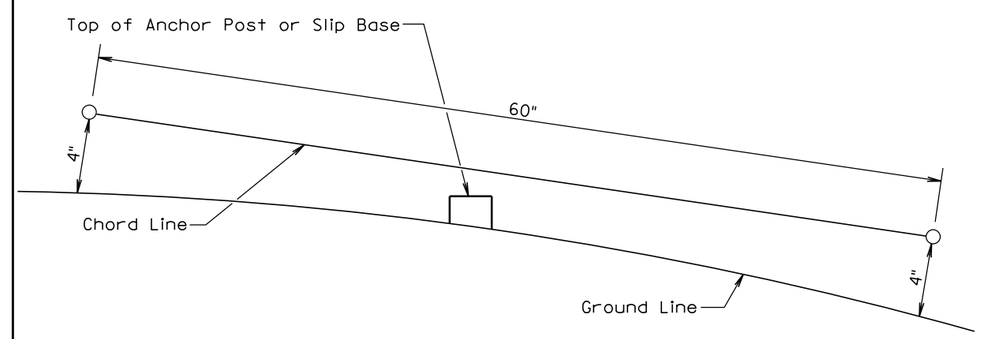

ELEVATION VIEW

GENERAL NOTES:

The top of anchor posts and slip bases SHALL NOT extend above a 60" chord line within a 120" diameter circle around the post with ends 4" above the ground.

At locations where there is curb and gutter adjacent to the breakaway sign support, the stub height shall be a maximum of 4" above the ground line at the localized area adjacent to the breakaway support stub.

The 4" stub height clearance is not necessary for U-channel lap splices where the support is designed to yield (bend) at the base.

July 1, 2005

Published Date: 1st Qtr. 2013	SDDOT	BREAKAWAY SUPPORT STUB CLEARANCE	PLATE NUMBER 634.99
			Sheet 1 of 1

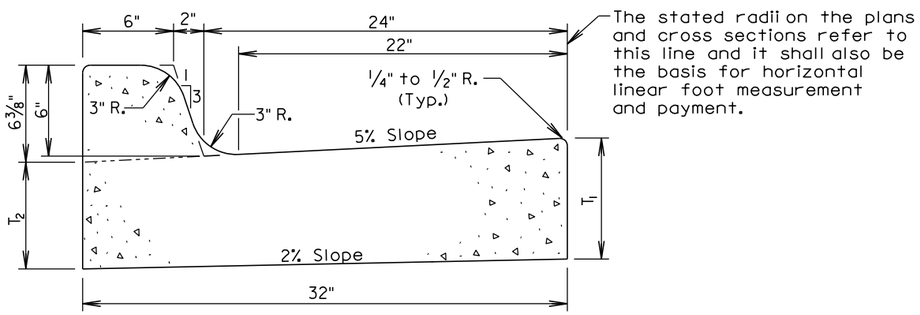

Type	T_1 (Inches)	T_2 (Inches)	Cu. Yd. Per Lin. Ft.	Lin. Ft. Per Cu. Yd.
B66	6	5 1/16	0.057	17.7
B67	7	6 1/16	0.065	15.4
B68	8	7 1/16	0.073	13.7
B68.5	8.5	7 9/16	0.077	13.0
B69	9	8 1/16	0.081	12.3
B69.5	9.5	8 9/16	0.085	11.7
B610	10	9 1/16	0.090	11.2
B610.5	10.5	9 9/16	0.094	10.7
B611	11	10 1/16	0.098	10.2
B611.5	11.5	10 9/16	0.102	9.8
B612	12	11 1/16	0.106	9.4

GENERAL NOTES:

When concrete curb and gutter longitudinally adjoins new concrete pavement, the method of attachment shall be by one of the methods shown on Standard Plate 380.11.

See Standard Plate 650.90 for expansion and contraction joints in the curb and gutter.

September 6, 2008

Published Date: 1st Qtr. 2013 | SDDOT | TYPE B CONCRETE CURB AND GUTTER | PLATE NUMBER 650.01 | Sheet 1 of 1

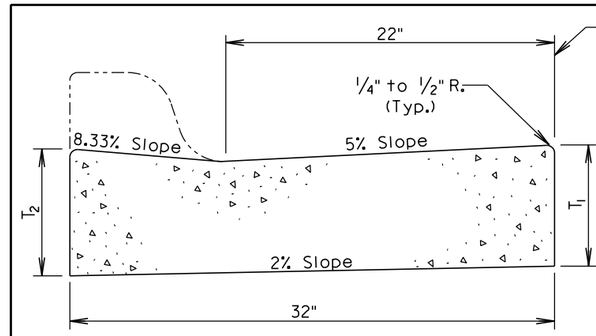

TRANSVERSE SECTION

Type	T_1 (Inches)	T_2 (Inches)	Cu. Yd. Per Lin. Ft.	Lin. Ft. Per Cu. Yd.
P6	6	6 3/8	0.047	21.2
P7	7	7 3/8	0.055	18.1
P8	8	8 3/8	0.064	15.7
P8.5	8.5	8 7/8	0.068	14.8
P9	9	9 3/8	0.072	13.9
P9.5	9.5	9 7/8	0.076	13.2
P10	10	10 3/8	0.080	12.5
P10.5	10.5	10 7/8	0.084	11.9
P11	11	11 3/8	0.088	11.3
P11.5	11.5	11 7/8	0.092	10.8
P12	12	12 3/8	0.096	10.4

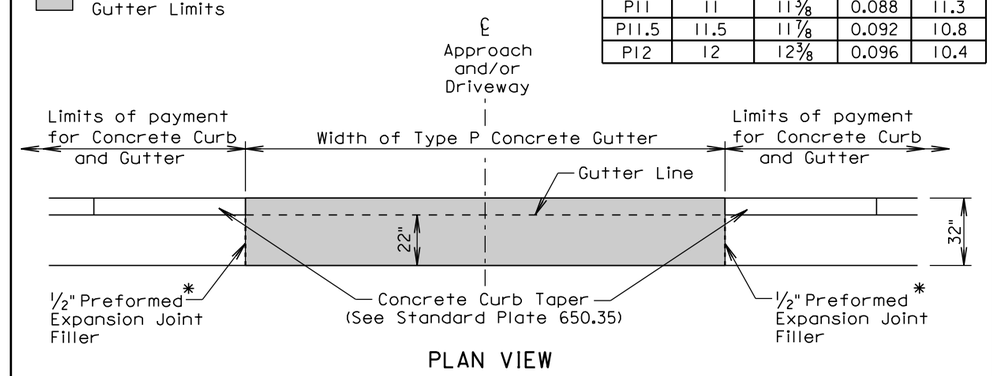

PLAN VIEW

* Joint will not be needed if concrete curb & gutter and type P concrete gutter is placed at the same time.

GENERAL NOTES:

The concrete for the Type P Concrete Gutter shall comply with the requirements of the Standard Specifications for Class M6 Concrete.

When concrete gutter longitudinally adjoins new concrete pavement, the method of attachment shall be by one of the methods shown on Standard Plate 380.11.

Transverse contraction joints shall be constructed at 10' intervals in the concrete gutter except when concrete gutter is constructed adjacent to mainline PCC pavement. When concrete gutter is constructed adjacent to mainline PCC pavement, a transverse contraction joint shall be constructed in the concrete gutter at each mainline PCC pavement transverse contraction joint location.

When concrete gutter is placed monolithically with mainline PCC pavement, the transverse contraction joints in the concrete gutter shall be sawed and sealed the same as the transverse contraction joints in the mainline PCC pavement.

When concrete gutter is not placed monolithically with the mainline PCC pavement and when the adjacent mainline surfacing is not PCC concrete, the transverse contraction joints in the concrete gutter shall be 1 1/2 inches deep if formed in the fresh concrete using a suitable grooving tool. If a saw is used to cut the contraction joints, then the depth of the joint shall be at least 1/4 the thickness of the concrete.

September 6, 2008

Published Date: 1st Qtr. 2013 | SDDOT | TYPE P CONCRETE GUTTER | PLATE NUMBER 650.30 | Sheet 1 of 1

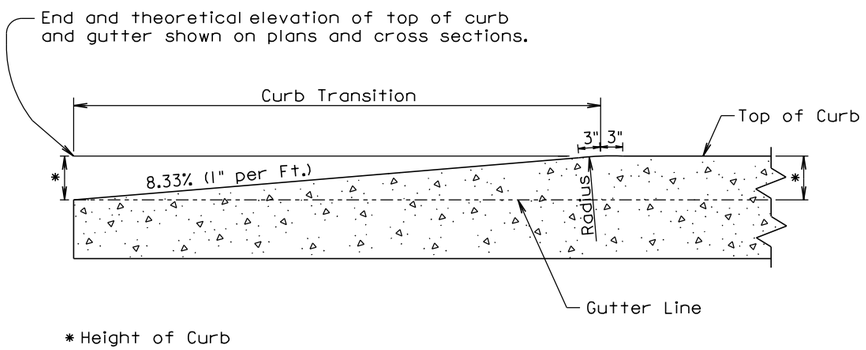

LONGITUDINAL SECTION OF CONCRETE CURB TAPER

September 14, 2005

Published Date: 1st Qtr. 2013	SDDOT	CONCRETE CURB TAPER	PLATE NUMBER 650.35
			Sheet 1 of 1

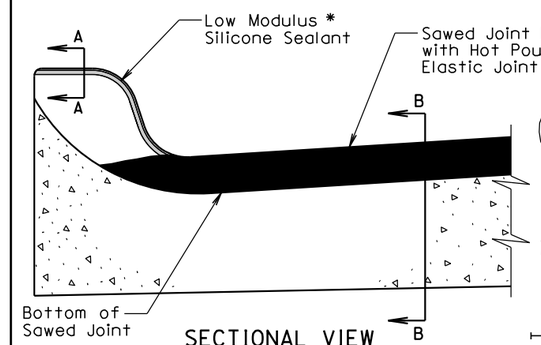

SECTIONAL VIEW

(Curb and Gutter Placed Monolithic with Adjacent Mainline PCC Pavement)

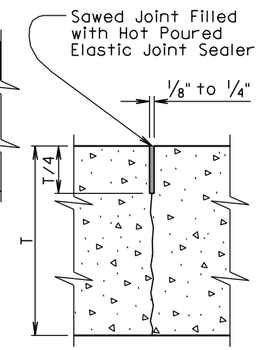

SECTION B-B

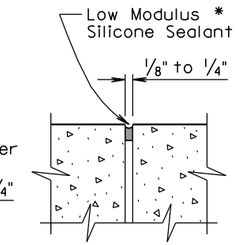

SECTION A-A

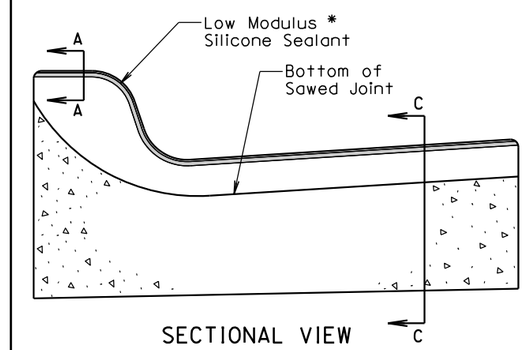

SECTIONAL VIEW

(Curb and Gutter not Placed Monolithic with Adjacent Mainline PCC Pavement or Mainline Surfacing is not PCC Pavement)

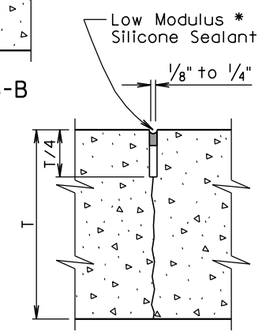

SECTION C-C

* The silicone sealant shall be placed such that it completely seals the joint and is bonded to the sides of the clean joint as approved by the Engineer.

GENERAL NOTES:

For illustrative reason, only the type B curb and gutter is shown.

A 1/2" preformed expansion joint filler shall be placed transversely in the curb and gutter at the following locations:

1. At each junction between the radius return of curb and gutter and curb and gutter which is parallel to the project centerline.
2. At each junction between new curb and gutter and existing curb and gutter.

Transverse contraction joints shall be constructed at 10' intervals in the concrete curb and gutter except when the concrete curb and gutter is constructed adjacent to mainline PCC pavement. When concrete curb and gutter is constructed adjacent to mainline PCC pavement, a transverse contraction joint shall be constructed in the concrete curb and gutter at each mainline PCC pavement transverse contraction joint location.

When concrete curb and gutter is not placed monolithically with the mainline PCC pavement or when the adjacent mainline surfacing is not PCC concrete, the transverse contraction joints in the concrete curb and gutter shall be 1 1/2 inches deep if formed in the fresh concrete using a suitable grooving tool. If a saw is used to cut the contraction joints, then the depth of the joint shall be at least 1/4 the thickness of the concrete and the joint shall be sealed in accordance with the details shown above.

September 6, 2006

Published Date: 1st Qtr. 2013	SDDOT	JOINTS IN CONCRETE CURB AND GUTTER	PLATE NUMBER 650.90
			Sheet 1 of 1