ABERDEEN AREA

UPDATED 4-8-14

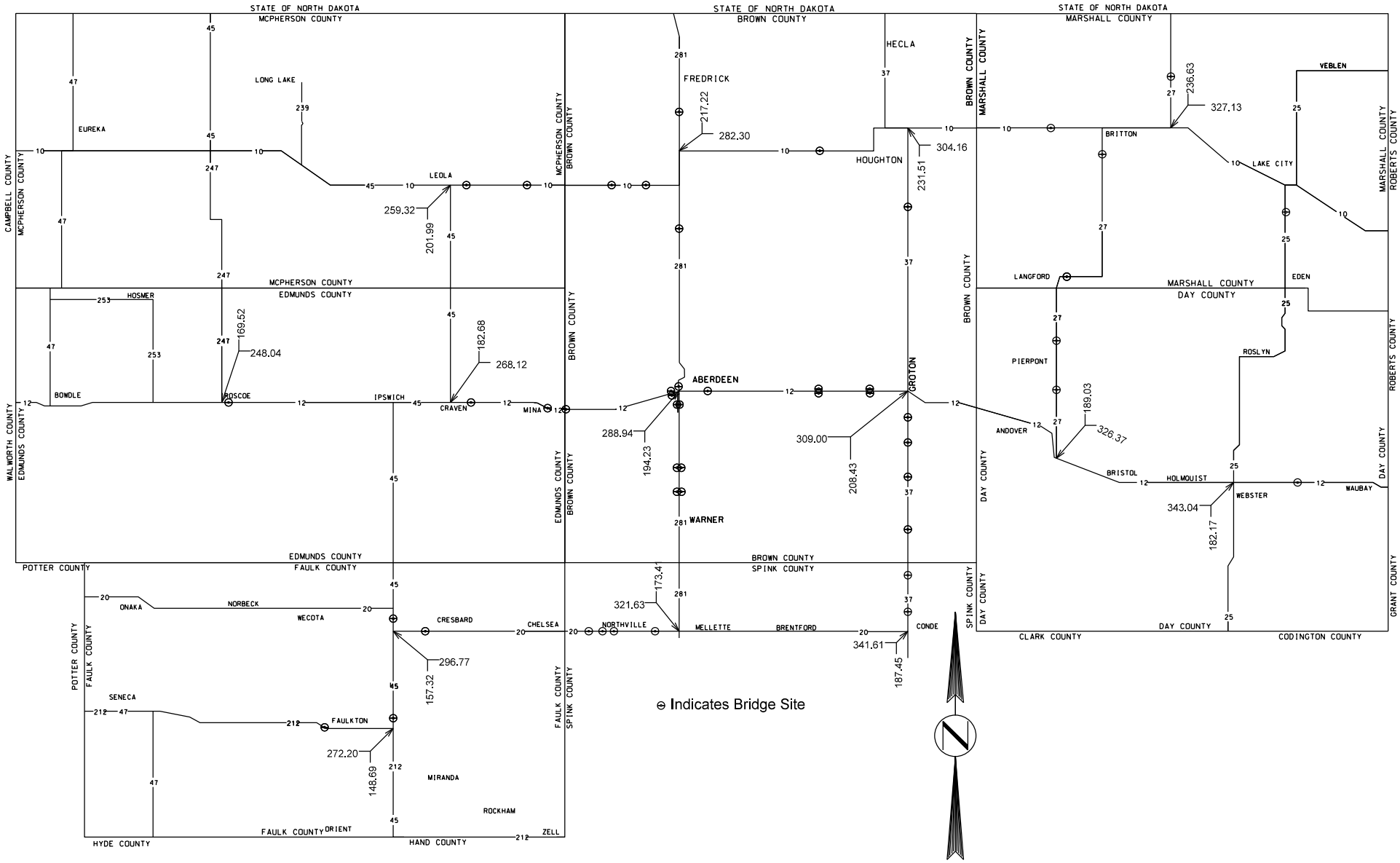

HURON AREA

UDATED 4-8-14

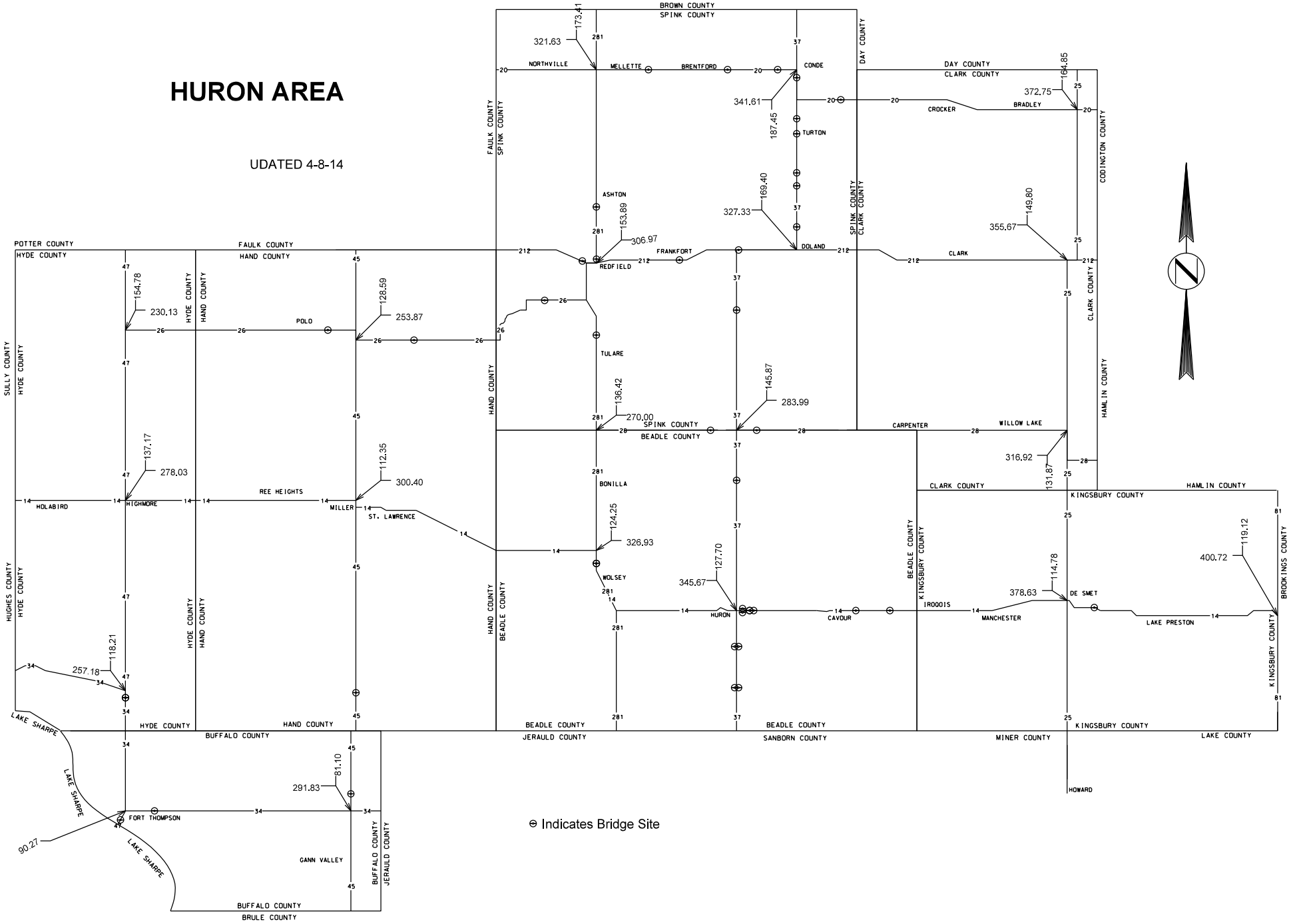

⊖ Indicates Bridge Site

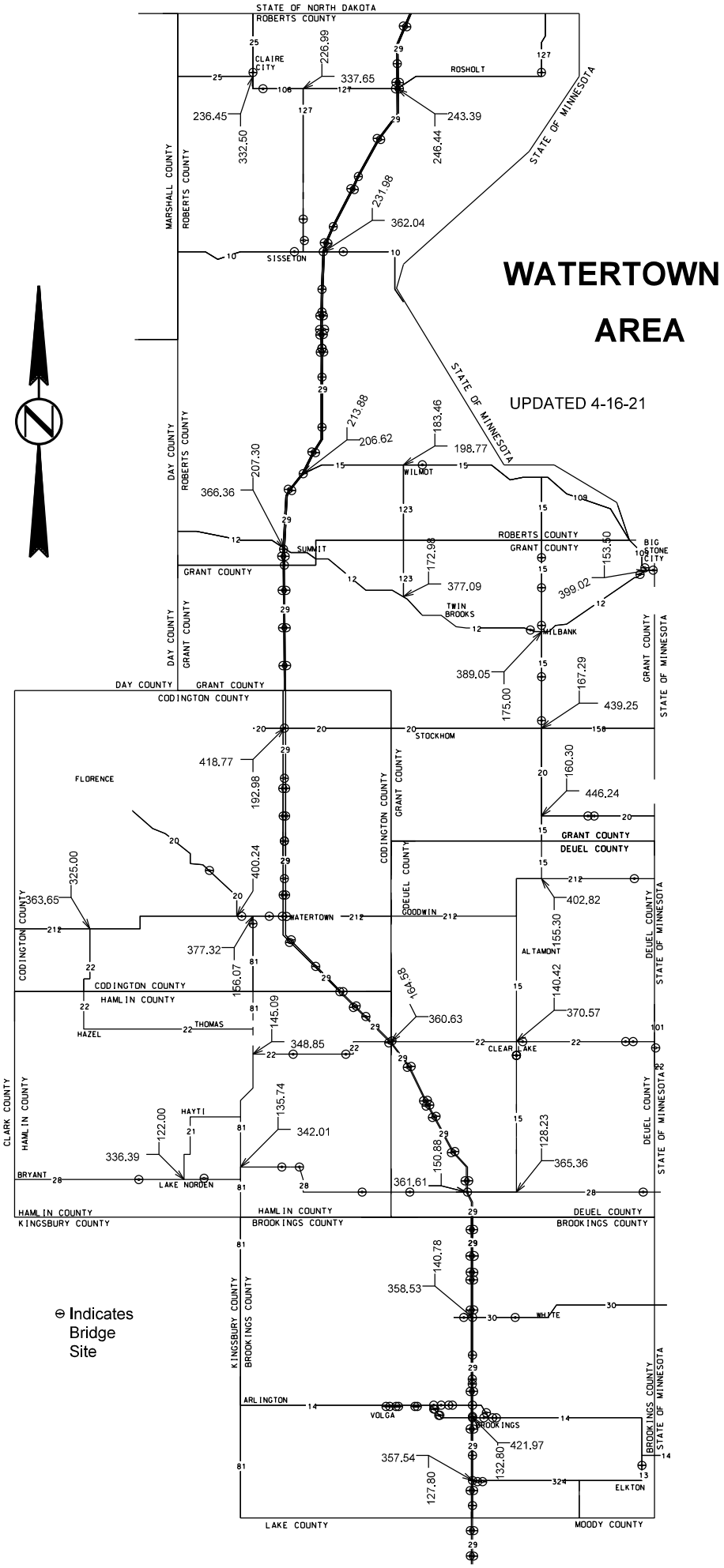
WATERTOWN
AREA
UPDATED 4-16-21
STATE OF NORTH DAKOTA
ROBERTS COUNTY
CLAIRE CITY
ROSHOLT
SISSETON
WILMOT
SUMMIT
BIG STONE CITY
TWIN BROOKS
MILBANK
STOCKHOM
FLORENCE
WATERTOWN
GOODWIN
ALTAMONT
CLEAR LAKE
HAZEL
THOMAS
HAYTI
BRYANT
LAKE NORDEN
WHITE
ARLINGTON
VOLGA
BROOKINGS
ELKTON
MARSHALL COUNTY
DAY COUNTY
GRANT COUNTY
CODINGTON COUNTY
DEUEL COUNTY
HAMLIN COUNTY
CLARK COUNTY
KINGSBURY COUNTY
BROOKINGS COUNTY
LAKE COUNTY
MOODY COUNTY
STATE OF MINNESOTA
Indicates Bridge Site

ENVIRONMENTAL COMMITMENTS

The SDDOT is committed to protecting the environment and uses Environmental Commitments as a communication tool for the Engineer and Contractor to ensure that attention is given to avoid, minimize, and/or mitigate an environmental impact. Environmental commitments to various agencies and the public have been made to secure approval of this project. An agency with permitting authority can delay a project if identified environmental impacts have not been adequately addressed. Unless otherwise designated, the Contractor's primary contact regarding matters associated with these commitments will be the Project Engineer. During construction, the Project Engineer will verify that the Contractor has met Environmental Commitment requirements. These environmental commitments are not subject to change without prior written approval from the SDDOT Environmental Office.

Additional guidance on SDDOT's Environmental Commitments can be accessed through the Environmental Procedures Manual found at: <https://dot.sd.gov/media/documents/EnvironmentalProceduresManual.pdf >

For questions regarding change orders in the field that may have an effect on an Environmental Commitment, the Project Engineer will contact the Environmental Engineer at 605-773-3180 or 605-773-4336 to determine whether an environmental analysis and/or resource agency coordination is necessary.

Once construction is complete, the Project Engineer will review all environmental commitments for the project and document their completion.

COMMITMENT B: FEDERALLY THREATENED, ENDANGERED, AND PROTECTED SPECIES

COMMITMENT B2: WHOOPING CRANE

The Whooping Crane is a spring and fall migratory bird in South Dakota that is about 5 feet tall and typically stops on wetlands, rivers, and agricultural lands along their migration route. An adult Whooping Crane is white with a red crown and a long, dark, pointed bill. Immature Whooping Cranes are cinnamon brown. While in flight, their long necks are kept straight and their long dark legs trail behind. Adult Whooping Cranes' black wing tips are visible during flight.

Action Taken/Required:

Harassment or other measures to cause the Whooping Crane to leave the site is a violation of the Endangered Species Act. If a Whooping Crane is sighted roosting in the vicinity of the project, borrow pits, or staging areas associated with the project, cease construction activities in the affected area until the Whooping Crane departs and immediately contact the Project Engineer. The Project Engineer will contact the Environmental Office so that the sighting can be reported to USFWS.

COMMITMENT B4: BALD EAGLE

Bald eagles are known to occur in this area.

Action Taken/Required:

If a nest is observed within one mile of the project site, notify the Project Engineer immediately so that he/she can consult with the Environmental Office for an appropriate course of action.

COMMITMENT E: STORM WATER

Construction activities constitute less than 1 acre of disturbance.

Action Taken/Required:

At a minimum and regardless of project size, appropriate erosion and sediment control measures must be installed to control the discharge of pollutants from the construction site.

COMMITMENT H: WASTE DISPOSAL SITE

The Contractor will furnish a site(s) for the disposal of construction and/or demolition debris generated by this project.

Action Taken/Required:

The waste disposal site(s) will be managed and reclaimed in accordance with the following from the General Permit for Construction/Demolition Debris Disposal Under the South Dakota Waste Management Program issued by the Department of Environment and Natural Resources.

The waste disposal site(s) will not be located in a wetland, within 200 feet of surface water, or in an area that adversely affects wildlife, recreation, aesthetic value of an area, or any threatened or endangered species, as approved by the Environmental Office and the Project Engineer.

If the waste disposal site(s) is located such that it is within view of any ROW, the following additional requirements will apply:

1. Construction and/or demolition debris consisting of concrete, asphalt concrete, or other similar materials will be buried in a trench separate from wood debris. The final cover over the construction and/or demolition debris will consist of a minimum of 1 foot of soil capable of supporting vegetation. Waste disposal sites provided outside of the Public ROW will be seeded in accordance with Natural Resources Conservation Service recommendations. The seeding recommendations may be obtained through the appropriate County NRCS Office. The Contractor will control the access to waste disposal sites not within the Public ROW with fences, gates, and placement of a sign or signs at the entrance to the site stating, “No Dumping Allowed”.

2. Concrete and asphalt concrete debris may be stockpiled within view of the ROW for a period not to exceed the duration of the project. Prior to project completion, the waste shall be removed from view of the ROW or buried, and the waste disposal site reclaimed as noted above.

The above requirements will not apply to waste disposal sites that are covered by an individual solid waste permit as specified in SDCL 34A-6-58, SDCL 34A-6-1.13, and ARSD 74:27:10:06.
Failure to comply with the requirements stated above may result in civil penalties in accordance with South Dakota Solid Waste Law, SDCL 34A-6-1.31.

All costs associated with furnishing waste disposal site(s), disposing of waste, maintaining control of access (fence, gates, and signs), and reclamation of the waste disposal site(s) will be incidental to the various contract items.

COMMITMENT I: HISTORICAL PRESERVATION OFFICE CLEARANCES

State Historical Preservation Office (SHPO or THPO) concurrence has not been obtained for this project.

Action Taken/Required:

All earth disturbing activities require a cultural resource review prior to scheduling the pre-construction meeting. This work includes but is not limited to: Contractor furnished material sources, material processing sites, stockpile sites, storage areas, plant sites, and waste areas.

The Contractor will arrange and pay for a record search and when necessary, a cultural resource survey. The Contractor has the option to contact the state Archaeological Research Center (ARC) at 605-394-1936 or another qualified archaeologist, to obtain either a records search or a cultural resources survey. A record search might be sufficient for review if the site was previously surveyed; however, a cultural resources survey may need to be conducted by a qualified archaeologist.

The Contractor will provide ARC with the following: a topographical map or aerial view in which the site is clearly outlined, site dimensions, project number, and PCN. If applicable, provide evidence that the site has been previously disturbed by farming, mining, or construction activities with a landowner statement that artifacts have not been found on the site.

The Contractor will submit the cultural resources survey report to SDDOT Environmental Office, 700 East Broadway Avenue, Pierre, SD 57501-2586. SDDOT will submit the information to the appropriate SHPO/THPO. Allow **30 Days** from the date this information is submitted to the Environmental Engineer for SHPO/THPO review.

In the event of an inadvertent discovery of human remains, funerary objects, or if evidence of cultural resources is identified during project construction activities, then such activities within 100 feet of the inadvertent discovery will
immediately cease and the Project Engineer will be immediately notified. The Project Engineer will contact the SDDOT Environmental Office, who will contact the appropriate SHPO/THPO within 48 hours of the discovery to determine an appropriate course of action.

The Contractor is responsible for obtaining any additional permits and clearances for Contractor furnished material sources, material processing sites, stockpile sites, storage areas, plant sites, and waste areas that affect wetlands, threatened and endangered species, or waterways. The Contractor will not utilize a site known or suspected of having contaminated soil or water. The Contractor will provide the required permits and clearances to the Project Engineer at the preconstruction meeting.

GUARDRAIL REPAIR

BEADLE, BROOKINGS, BROWN, BUFFALO, CLARK, CODINGTON, DAY, DEUEL, EDMUNDS, FAULK, GRANT, HAMLIN, HAND, HYDE, KINGSBURY, MCPHERSON, MARSHALL, MOODY, ROBERTS, AND SPINK COUNTIES

CONTRACT PROVISIONS

1. The Contract will become effective beginning July 1, 2021 and will expire on July 1, 2022.

2. Guardrail repairs will be limited to Interstate and State Highways located in the Aberdeen Region within the boundaries of Beadle, Brookings, Brown, Buffalo, Clark, Codington, Day, Deuel, Edmunds, Faulk, Grant, Hamlin, Hand, Hyde, Kingsbury, McPherson, Marshall, Moody, Roberts, and Spink Counties.

3. Standard Specifications for Roads and Bridges, 2015 Edition and Required Provisions, Supplemental Specifications and Special Provisions as included in the Proposal will apply to this contract. Guardrail repair will conform to current Department of Transportation Standards or as directed by the Engineer.

4. The quantities shown on the SDDOT CONTRACT PROPOSAL are estimated quantities only, based upon previous years quantities. The actual amount of work accomplished may vary greatly from the quantities shown. There will be NO negotiation of contract unit prices for over-runs or under-runs.

5. All repair items will be furnished new by the Contractor. Should some guardrail items be required that are not included in the contract, the Contractor will be paid for invoice cost of the item(s) plus shipping charges, taxes and ten percent for profit. Approval from the Area Engineer will be required prior to the purchase of non-contract item materials.

   All costs to furnish and install new bolts, nuts, washers, nails, and other miscellaneous items will be incidental to the various other contract items.

   All damaged and replaced materials will become the property of the Contractor for disposal.

   The Contractor will remove broken stub posts protruding from the ground when installing new posts. Any holes left after replacement of the guardrail will be backfilled with material furnished by the Contractor and compacted to the satisfaction of the Engineer.

6. Any damage to the roadway surfacing, embankment, vegetation, signing, etc. that occurs during guardrail repair operations will be repaired and/or restored by the Contractor, at no expense to the State, and to the satisfaction of the Engineer.

7. The Contractor will be notified at such time as repairs are required. The Contractor will complete all necessary repairs within twenty-one (21) calendar days after notification. For each day after the 21 calendar day limitation, the Contractor will be assessed liquidated damages at the rate of $300.00 per day.

   The Contractor will inform the Engineer of the work schedule for guardrail repairs and any changes in the work schedule will be provided per Section 5.11 of the Specifications.

   Once the existing guardrail is removed from any item of concern (bridge end, box culvert, bridge column, etc.), the Contractor will place drums or Type 2 Barricades at 25 foot intervals at each location where existing guardrail is removed. These devices will extend 175 feet beyond the item of concern for each direction of traffic. Drums or Barricades will remain in place until new guardrail has been installed.

8. The Contract Items F through V listed under No. 9 Definition of Contract Items will apply to 3 cable low tension guardrail, unless otherwise indicated.

   Numerous locations of high tension cable guardrail are installed in the median of I-29. Additionally, there are 2 installation locations of high tension cable guardrail installed within the geographic boundaries of this contract, located on SD 25 south of Webster in Day County and SD10 west of Sisseton in Roberts County. These installations are all Trinity Cass 4 Cable High Tension.

   High tension cable guardrail is scheduled to be installed on SD47 across the Big Bend Dam, during the 2021 construction season. This will be Trinity Cass-S3 Cable High Tension.

   Supplier installation details and drawings for the high tension guardrail installation may be obtained by contacting Scott.Schneider@state.sd.us.

9. Definition of Contract Items:

   A. **Mobilization 1:** Mobilization 1 (Aberdeen Area) will include all costs of mobilization within the Aberdeen Area to and from the project and will be paid on a per each basis each time the Contractor is called in by the Area Engineer to perform guardrail accident damage repair. The Aberdeen Area includes the following counties: Brown, Day, Edmunds, Faulk, McPherson, and Marshall Counties.

   B. **Mobilization 2:** Mobilization 2 (Huron Area) will include all costs of mobilization within the Huron Area to and from the project and will be paid on a per each basis each time the Contractor is called in by the Area Engineer to perform guardrail accident damage repair. The Huron Area includes the following counties: Beadle, Buffalo, Clark, Hand, Hyde, Kingsbury, and Spink Counties.

   C. **Mobilization 3**: Mobilization 3 (Watertown Area) will include all costs of mobilization within the Watertown Area to and from the project and will be paid on a per each basis each time the Contractor is called in by the Area Engineer to perform guardrail accident damage repair. The Watertown Area includes the following counties: Brookings, Codington, Deuel, Grant, Hamlin, Moody and Roberts Counties.

   D. **Remove and Replace Bolt Assembly:** Remove and Replace Bolt Assembly will include replacement of Part No. 4211G (5/16 Hex Bolt x 1 ¾" A307) on the Trinity SRT-350 Terminal.

   E. **Reset High Tension Cable Guardrail Terminal Post:** Reset High Tension Cable Guardrail Terminal Post will include all costs to reset the terminal post if the cable was released after the post was struck. Posts need to be in good working condition. This contract item will include miscellaneous hardware and tensioning cable.

   F. **Retension 3 Cable Guardrail:** Retension 3 Cable Guardrail will include all costs to adjust the tension in a length of 3 Cable Guardrail. The tension will be as shown on Standard Plate 629.01 (1 of 6). Measurement for payment will be per foot for all runs of 3 Cable Guardrail and will include all 3 cables and both anchor ends that make up a run of 3 Cable Guardrail. Retension 3 Cable Guardrail may include cutting and shortening of cables at the anchors to allow for the proper tensioning. Payment will be center of anchor to center of anchor.

   G. **Retension High Tension 4 Cable Guardrail:** Retension High Tension 4 Cable Guardrail will include all costs to adjust the tension in a length of High Tension 4 Cable Guardrail to manufacturers specifications. Measurement for payment will be from center of anchor to center of anchor and will include all 4 cables that make up a run of High Tension 4 Cable Guardrail. Retension High Tension 4 Cable Guardrail will include cutting and shortening of cables at the anchors to allow for the proper tensioning.

   H. **Repair 3 Cable Guardrail Slip Base Anchor Assembly:** Repair 3 Cable Guardrail Slip Base Anchor Assembly will include full compensation for repair of the damaged Slip Base Anchor Assembly. This work will be performed if it is determined that the Slip Base Anchor Assembly can be repaired without total footing removal. The work will consist of coring a 12" diameter section into the existing footing, centered over the existing slip base anchor stub post, to a depth of 22". The core will then be broke off and disposed of. The sides of the hole in the footing will be roughened to the satisfaction of the Engineer. A rapid-setting, non-shrink, non-metallic grout will be used (in accordance with the manufacturer's recommendations) to anchor the new slip base anchor stub post in the footing. The grout will reach a compressive strength of over 5000 PSI.

GUARDRAIL REPAIR

BEADLE, BROOKINGS, BROWN, BUFFALO, CLARK, CODINGTON, DAY, DEUEL, EDMUNDS, FAULK, GRANT, HAMLIN, HAND, HYDE, KINGSBURY, MCPHERSON, MARSHALL, MOODY, ROBERTS, AND SPINK COUNTIES

I. **3 Cable Guardrail End Post:** 3 Cable Guardrail End Post will include all costs for removal of damaged end post and installation of 3 cable guardrail end post. 3 Cable Guardrail End Post will also include a new end post cap. All costs incurred for removal and replacement of the existing cable on the new post will be incidental to this contract item.

J. **3 Cable Guardrail Intermediate Post:** 3 Cable Guardrail Intermediate Post will include all costs for removal of damaged post and installation of 3 cable guardrail intermediate line post. All costs incurred for removal and replacement of the existing cable on the new post, including J Hook Bolts will be incidental to this contract item.

K. **3 Cable Guardrail Slip Base Anchor Post:** 3 Cable Guardrail Slip Base Anchor Post will include all costs for removal of damaged post and installation of 3 cable guardrail slip base anchor post. All costs incurred for removal and replacement of the existing cable on the new post, will be incidental to this contract item.

L. **3 Cable Guardrail Post, Winter:** 3 Cable Guardrail Post, Winter will include all costs for removal of the damaged post and installation of cable guardrail post when there is in excess of one foot of frozen ground at the work site. When this condition exists, the contract unit price per each for “3 Cable Guardrail Post, Winter” will be the pay unit rather than the contract unit price per each for "3 Cable Guardrail Intermediate Post" and/or "3 Cable Guardrail End Post". The Contractor will furnish any J Hook Bolts needed as shown on Standard Plate 629.01 (5 of 6).

   All costs incurred for removal and replacement of the existing cable on the new post, including J Hook Bolts will be incidental to this contract item.

M. **Drive Down 3 Cable Guardrail Post:** Drive Down 3 Cable Guardrail Post will include all costs for adjusting the height of a Cable Rail Post. All costs to disassemble the cable rail to do this work will be incidental to this contract item.

N. **Reset 3 Cable Guardrail Post:** Reset 3 Cable Guardrail Post will include all costs incurred for the realignment and/or removal and resetting of a cable guardrail post to properly align cable guardrail section. The Contractor will furnish any J Hook Bolts needed as shown on Standard Plate 629.01 (5 of 6).

   Work under this item may require straightening of in place bent cable guardrail posts to bring them into alignment with cable guardrail section. Payment for “Reset 3 Cable Guardrail Post” will be the same whether in frozen or unfrozen ground. All costs incurred for removal and replacement of the existing cable on the new post will be incidental to this item.

O. **Cable Anchor Bracket:** Cable Anchor Bracket will include furnishing and installing the Cable Anchor Bracket as shown on Standard Plate 629.01 (3 of 6).

P. **Cable Splice:** Cable Splice will include all costs incurred for cutting existing cable and for furnishing and installing the necessary cable splice. This contract item will be used for low tension and high tension cable guardrail.

Q. **3 Cable Guardrail J Hook Bolt:** 3 Cable Guardrail J Hook Bolt will include furnishing & installing J hook bolts when no other work is required to the 3 cable guardrail other than missing or broken J hook bolts.

R. **Steel Turnbuckle Cable End Assembly:** Steel Turnbuckle Cable End Assembly will include all costs for furnishing and installing the Steel Turnbuckle Cable End Assembly as shown on Standard Plate 629.01 (4 of 6).

S. **Turnbuckle Assembly:** Turnbuckle Assembly will include all costs for furnishing and installing the Turnbuckle Assembly on high tension cable guardrail.

T. **Spring Cable End Assembly with Turnbuckle:** Spring Cable End Assembly with Turnbuckle will include all costs for furnishing and installing the Spring Cable End Assembly with Turnbuckle as shown on Standard Plate 629.01 (4 of 6).

U. **W Beam to 3 Cable Transition Bracket:** W Beam to 3 Cable Transition Bracket will include all costs incurred for removing the damaged transition bracket and installing a transition bracket in accordance with the details on Standard Plates 629.05 & 629.15.

V. **3 Cable Guardrail End Post Cap:** 3 Cable Guardrail End Post Cap will include all costs for furnishing and installing an end post cap as shown on Standard Plate 629.01 (6 of 6).

W. **High Tension 4 Cable Guardrail Post:** High Tension 4 Cable Guardrail Post will include all costs for removal of damaged post and installation of a High Tension 4 Cable Guardrail Post. All costs incurred for removal and replacement of the existing cable on the new post, including hardware will be incidental to this contract item.

X. **High Tension 4 Cable Guardrail Post and Sleeve:** High Tension 4 Cable Guardrail Post and Sleeve will include all costs for removal of damaged post and sleeve, and installation of a High Tension 4 Cable Guardrail Post and Sleeve. All costs incurred for removal and replacement of the existing cable on the new post, including hardware will be incidental to this contract item.

Y. **High Tension 4 Cable Guardrail Sleeve:** High Tension 4 Cable Guardrail Sleeve will include all costs for removal of damaged sleeve and installation of a High Tension 4 Cable Guardrail Sleeve. All costs incurred for removal and replacement of the existing post and of the existing cable on the post, including hardware will be incidental to this contract item.

Z. **High Tension Cable Guardrail Terminal Post:** High Tension Cable Guardrail Terminal Post will include all costs for removal of damaged terminal post and installation of a High Tension Cable Guardrail Terminal Post. All costs incurred for removal and replacement of the existing cable on the new post, including reflective sheeting, hardware and tensioning cable will be incidental to this contract item.

AA. **Hardware For High Tension Cable Attachment To Terminal Post:** Hardware For High Tension Cable Attachment To Terminal Post will be used for furnishing and installing the hardware for a high tension cable guardrail terminal post. This item is used for a typical repair if a high tension cable guardrail terminal post is struck and releases the cable(s). Use this item when the terminal post is in good condition and only new hardware and resetting the terminal post is necessary. Payment includes cost for furnishing and installing hardware for the high tension cable attachment to terminal post, resetting terminal post, labor, equipment, and incidentals.

BB. **Hardware For High Tension Cable Attachment To Post:** Hardware For High Tension Cable Attachment To Post will be used for furnishing and installing the hardware for a high tension cable attachment to post. This item is used for a typical repair if the hardware was damaged by a snow plow or other crash. Use this item when the post is in good condition and only new hardware is necessary. The quantity and unit for the bid item is one "Each" for one attachment, i.e. if several attachments are damaged on a high tension 4 cable guardrail post then the quantity would be more than 1. Payment includes cost for furnishing and installing hardware for the high tension cable attachment to post, labor, equipment, and incidentals.

CC. **High Tension Cable Guardrail Cable Strap:** High Tension Cable Guardrail Cable Strap will include all costs for removal of damaged/missing strap and installation of a High Tension Cable Guardrail Cable Strap. High Tension Cable Guardrail Cable Strap contract item will not be paid for when a new guardrail post is paid for as the new guardrail post will include the strap. This item is specific to products from Trinity known as the CASS high tension cable barrier.

DD. **High Tension Cable Guardrail Cable Spacer:** High Tension Cable Guardrail Cable Spacer will include all costs for removal of damaged spacer and installation of a High Tension Cable Guardrail Cable Spacer. High Tension Cable Guardrail Cable Spacer contract item will not be paid for when a new guardrail post is paid for as the new guardrail post will include the spacer. This item is specific to products from Trinity known as the CASS high tension cable barrier.

EE. **Cable:** This contract item will include furnishing and installing cable for both low tension and high tension cable guardrail when the in place cable is damaged and needs to be replaced. Cable Splices required will be incidental to this contract item. All costs for retensioning of cables will be incidental to the contract unit price per foot for the respective cable retensioning contract item.

FF. **Straight Class A Thrie Beam Rail:** Straight Class A Thrie Beam Rail will include all costs for removing damaged Thrie Beam rail and replacing with Class A Thrie Beam rail.

GG. **Straight Class A W Beam Rail:** Straight Class A W Beam Rail will include all costs for removing damaged W Beam rail and replacing with Class A W Beam rail.

HH. **Straight Class B W Beam Rail:** Straight Class B W Beam Rail will include all costs for removing damaged W Beam rail and replacing with Class B W Beam rail.

II. **W Beam to Thrie Beam Guardrail Transition:** W Beam to Thrie Beam Guardrail Transition will include all costs for removing damaged rail and replacing with a W Beam to Thrie Beam Guardrail Transition.

JJ. **Asymmetrical W Beam to Thrie Beam Guardrail Transition:** Asymmetrical W Beam to Thrie Beam Guardrail Transition will include all costs for removing damaged rail and replacing with a Asymmetrical W Beam to Thrie Beam Guardrail Transition.

KK. **W Beam Guardrail Flared End Terminal:** W Beam Guardrail Flared End Terminal will include all costs incurred for furnishing and installing an approved flared end terminal in accordance with details on Standard Plate 630.86. At some locations of W Beam Guardrail Flared End Terminal damage, the Area Engineer may decide to replace the existing W Beam Guardrail Flared End Terminal in lieu of replacing the various components of the W Beam Guardrail Flared End Terminal.

The W Beam Guardrail Flared End Terminal will be on the approved products list: http://apps.sd.gov/HC60ApprovedProducts/main.aspx

The contract unit price per each for "W Beam Guardrail Flared End Terminal" will include all costs incurred for furnishing and installing one (1) end section as shown on Standard Plate 630.86 including removal of the existing end terminal.

LL. **MGS MASH Flared End Terminal:** MGS MASH Flared End Terminal will include all costs incurred for furnishing and installing an approved MGS MASH flared end terminal in accordance with details on Standard Plate 630.87. At some locations of MGS Flared End Terminal damage, the Area Engineer may decide to replace the existing MGS Flared End Terminal in lieu of replacing the various components of the MGS Flared End Terminal.

The MGS MASH Flared End Terminal will be on the approved products list: http://apps.sd.gov/HC60ApprovedProducts/main.aspx

The contract unit price per each for "MGS MASH Flared End Terminal" will include all costs incurred for furnishing and installing one (1) end section as shown on Standard Plate 630.87 including removal of the existing end terminal.

MM. **MGS MASH Tangent End Terminal:** MGS MASH Tangent End Terminal will include all costs incurred for furnishing and installing an approved MGS MASH tangent end terminal in accordance with details on Standard Plate 630.89. At some locations of MGS Tangent End Terminal damage, the Area Engineer may decide to replace the existing MGS Tangent End Terminal in lieu of replacing the various components of the MGS Tangent End Terminal.

The MGS MASH Tangent End Terminal will be on the approved products list: http://apps.sd.gov/HC60ApprovedProducts/main.aspx

The contract unit price per each for "MGS MASH Tangent End Terminal" will include all costs incurred for furnishing and installing one (1) end section as shown on Standard Plate 630.89 including removal of the existing end terminal.

NN. **W Beam Guardrail Tangent End Terminal:** W Beam Guardrail Tangent End Terminal will include all costs incurred for furnishing and installing an approved tangent end terminal in accordance with details on Standard Plate 630.88. At some locations of W Beam Guardrail Tangent End Terminal damage, the Area Engineer may decide to replace the existing W Beam Guardrail Tangent End Terminal in lieu of replacing the various components of the W Beam Guardrail Tangent End Terminal.

The W Beam Guardrail Tangent End Terminal will be on the approved products list: http://apps.sd.gov/HC60ApprovedProducts/main.aspx

The contract unit price per each for "W Beam Guardrail Tangent End Terminal" will include all costs incurred for furnishing and installing one (1) end section as shown on Standard Plate 630.88 including removal of the existing end terminal.

OO.**Beam Guardrail Block:** Beam Guardrail Block will include all costs for removing the broken block and installing a block. Blocks will be of the appropriate size and type for the installation being repaired.

PP.**Beam Guardrail Post & Block:** Beam Guardrail Post & Block will include all costs for removing the broken post and installing a post and block. Post and Blocks will be of the appropriate size and type for the installation being repaired. Any holes required to be drilled in the posts, such as the 3 1/2" diameter holes for the MELT end posts as per Standard Plate SPECIAL - A (3 of 3), will also be included. Beam Guardrail Post & Block will include replacement of post and blocks located within the limits of the Tangent and Flared End Terminals.

QQ.**Beam Guardrail Post & Block, Winter:** Beam Guardrail Post & Block, Winter will include all costs incurred for replacement of a steel beam guardrail post when there is in excess of one foot of frozen ground at the work site. When this condition exists, the contract unit price per each for "Beam Guardrail Post & Block, Winter" will be the pay unit rather than the contract unit price per each for "Beam Guardrail Post & Block". Post and Blocks will be of the appropriate size and type for the installation being repaired. The Contractor will field drill 3 1/2" diameter holes in posts as per Standard Plate SPECIAL - A (3 of 3) when placing MELT ends. Beam Guardrail Post & Block, Winter will include replacement of post and blocks located within the limits of the Tangent and Flared End Terminals.

RR.**End Terminal Wood Breakaway Post:** End Terminal Wood Breakaway Post will include all costs incurred for removal of a broken wood end post and installing a replacement wood end post in a steel tube sleeve. This contract item will include replacement of wood posts on various end terminals including Breakaway Cable Terminals (BCT), Modified Eccentric Loader Terminals (MELT), Trailing End Terminals, Tangent End Terminals and Flared End Terminals. The Contractor will be responsible for making sure the wood post matches the appropriate Standard Plate or end terminal manufacturer's requirements.

SS.**End Terminal Hinged Breakaway Post:** End Terminal Hinged Breakaway Post will include all costs incurred for removal of a hinged breakaway end post and installing a replacement hinged post on a post bottom base. This contract item will include replacement of hinged breakaway posts on various end terminals including Tangent End Terminals and Flared End Terminals. The Contractor will be responsible for making sure the hinged breakaway post matches the end terminal manufacturer's requirements.

TT.**Breakaway Cable Terminal End Rail:** Breakaway Cable Terminal (B.C.T) End Rail will include all costs incurred for removing the 12.5 ft. or 25 ft section of damaged B.C.T. W beam adjacent to the Radius Terminal Element and replacing with new guardrail. The Contractor will field drill holes in the guardrail for installation.

UU.**W-Beam Guardrail End Section Buffer:** W-Beam Guardrail End Section Buffer will include all costs incurred for installing a buffer assembly. Removal of the existing end section buffer will be incidental to this contract item.

VV. **Tangent End Terminal Extruder Head:** Tangent End Terminal Extruder Head will include all costs incurred for removing the damaged extruder head and installing a new extruder head on the Tangent End Terminal.

WW.**Tangent End Terminal Rail:** Tangent End Terminal Rail will include all costs incurred for removing 12.5 ft. or 25 ft. section(s) of damaged beam guardrail and replacing new beam guardrail on the Tangent End Terminal.

XX. **Rubrail:** Rubrail will include all costs to install rubrail. The Contractor will provide the necessary wood blocks and bolts to attach the rubrail to the wood posts.

YY. **Drive Down Beam Guardrail Post:** Drive Down Beam Guardrail Post will include all costs for adjusting the height of a steel beam guardrail post. All costs to disassemble the steel beam guardrail will be incidental to this contract item.

ZZ. **Reset Beam Guardrail Post & Block:** Reset Beam Guardrail Post & Block will include all costs for removing and resetting post to properly align the steel beam section. Payment for "Reset Beam Guardrail Post & Block" will be the same in frozen or unfrozen ground.

AAA. **Guardrail Delineator:** Guardrail Delineators will be as shown on Standard Plate 632.40. The appropriate delineator will be used on the 3 Cable Guardrail and the Beam Guardrail as indicated on Standard Plate 632.40. Delineator color will be as detailed on Standard Plate 632.40.

BBB. **Type 2 Object Marker Back to Back:** Type 2 Object Markers will be as shown on Standard Plate 632.40. Type 2 Object Markers Back to Back will be installed to mark the Cable Guardrail Anchor for two-way traffic as indicated on Standard Plate 632.40. Contract item includes the post and the reflectors.

CCC. **Type 2 Object Marker:** Type 2 Object Markers will be as shown on Standard Plate 632.40. Type 2 Object Markers will be installed to mark the Cable Guardrail Anchor for one-way traffic as indicated on Standard Plate 632.40. Contract item includes the post and the reflector.

DDD. **Flagging:** Payment for flagging will include all costs for provided certified flagger, stop/slow paddle, flag, and any nighttime illumination required. The accepted number of flagging hours will be paid for at the rate specified in the Special Provision for Price Schedule for Miscellaneous Items.

9. Traffic Control will be installed by the Contractor in accordance with the details on Sheets 17 thru 19 of the Contract. All signs, channelizing devices, and arrow boards will conform to the requirements of the Manual of Uniform Traffic Control Devices. All costs for furnishing, installing, and maintaining the traffic control will be incidental to the contract unit prices for the various contract items. Separate measurement and payment will not be made.

   When work is being performed on two way traffic roadways, flagging will be furnished by the Contractor in accordance with the standard plate included in this contract.

   Portable sign supports will be constructed to yield upon impact to minimize hazards to motorists. The bottom of signs on portable or temporary supports will not be less than seven feet above the pavement in urban areas and one foot above the pavement in rural areas. Portable sign supports may be used as long as the duration is less than 3 days. If the duration is more than 3 days the signs will be on fixed location, ground mounted, breakaway supports.

10. When the Contractor is called in to work at more than one site within an Area, Mobilization will only be paid once. In the event that Mobilization is required in two or more Areas at one time, the Contractor will be paid Mobilization into each one of the specific Areas. The cover sheets show where bridges are located within the Areas. There may be additional locations that have guardrail such as box culverts, large pipe, and steep inslopes which are not indicated on the cover sheets. Long runs of Cable Guardrail exist on several water hazard sites. These include:

    SD 25 from MRM 175.5 to MRM 177.8 in Day County – High Tension 4 Cable Guardrail
    (Lengths of cable runs at this location are 784’, 1291’, 2255’, 2464’, 4335’, & 7118’)

    US 212 from MRM 350.6 to MRM 351.7 in Clark County – Low Tension 3 Cable Guardrail

11. The Standard Plates included in this contract are provided for information purposes on how the various guardrail items are to be constructed and the materials required to complete the work. Plan notes contained on Sheets 7 thru 16 of this contract will take precedence over notes contained on the Standard Plates.

12. The Contractor will be responsible for removing and disposing of all guardrail components that are not being reused on the project. Guardrail components will not be discarded in the highway right-of-way or waterways.

GUARDRAIL REPAIR

BEADLE, BROOKINGS, BROWN, BUFFALO, CLARK, CODINGTON, DAY, DEUEL, EDMUNDS, FAULK, GRANT, HAMLIN, HAND, HYDE, KINGSBURY, MCPHERSON, MARSHALL, MOODY, ROBERTS, AND SPINK COUNTIES

Posted Speed Prior to Work (M.P.H.)	Spacing of Advance Warning Signs (Feet) (A)	Spacing of Channelizing Devices (Feet) (G)
0 - 30	200	25
35 - 40	350	25
45	500	25
50	500	50
55	750	50
60 - 65	1000	50

Flagger

Channelizing Device

For low-volume traffic situations with short work zones on straight roadways where the flagger is visible to road users approaching from both directions, a single flagger may be used.

The ROAD WORK AHEAD and the END ROAD WORK signs may be omitted for short duration operations (1 hour or less).

For tack and/or flush seal operations, when flaggers are not being used, the FRESH OIL sign (W21-2) will be displayed in advance of the liquid asphalt areas.

Flashing warning lights and/or flags may be used to call attention to the advance warning signs.

The channelizing devices will be drums or 42" cones.

Channelizing devices are not required along the centerline adjacent to work area when pilot cars are utilized for escorting traffic through the work area.

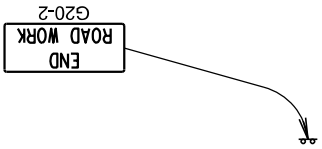

Channelizing devices and flaggers will be used at intersecting roads to control intersecting road traffic as required.

The buffer space should be extended so that the two-way traffic taper is placed before a horizontal or vertical curve to provide adequate sight distance for the flagger and queue of stopped vehicles.

The length of A may be adjusted to fit field conditions.

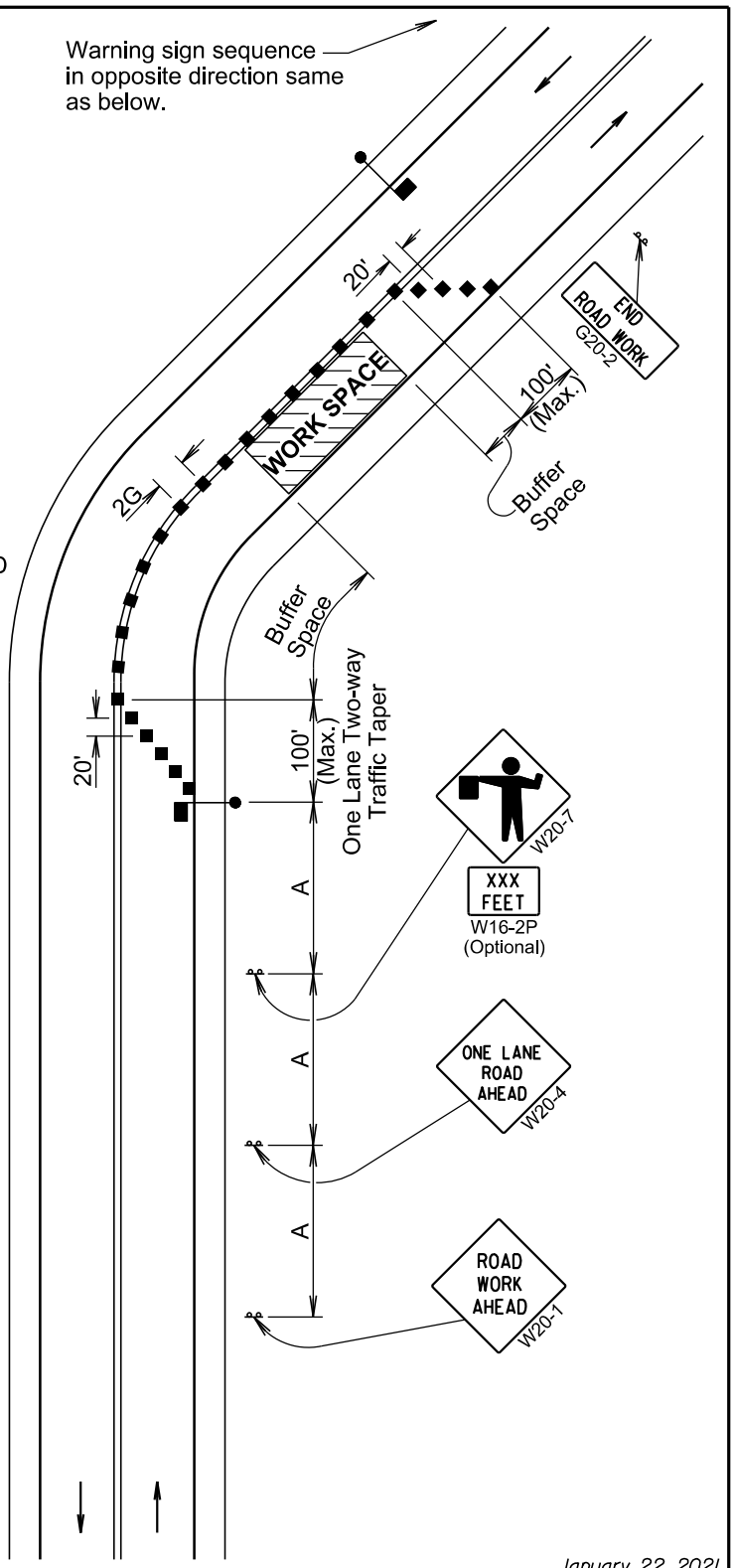

January 22, 2021

Published Date: 2nd Qtr. 2021	SDDOT	LANE CLOSURE WITH FLAGGER PROVIDED	PLATE NUMBER 634.23
			Sheet 1 of 1

GUARDRAIL REPAIR

BEADLE, BROOKINGS, BROWN, BUFFALO, CLARK, CODINGTON, DAY, DEUEL, EDMUNDS, FAULK, GRANT, HAMLIN, HAND, HYDE, KINGSBURY, MCPHERSON, MARSHALL, MOODY, ROBERTS, AND SPINK COUNTIES

Posted Speed Prior to Work (M.P.H.)	Spacing of Advance Warning Signs (Feet) (A)	Taper Length (Feet) (L)	Spacing of Channelizing Devices (Feet) (G)
0 - 30	200	180	25
35 - 40	350	320	25
45	500	600	25
50	500	600	50 *
55	750	660	50 *
60 - 65	1000	780	50 *

* Spacing is 40' for 42" cones.

◎ Reflectorized Drum

■ Channelizing Device

(4 W) 4" White Temporary Pavement Marking

The channelizing devices will be 42" cones or drums.

42" cones may be used in place of the drums shown in the taper if setup will not be used during night time hours.

Temporary pavement markings will be used if traffic control must remain overnight.

The length of A and L may be adjusted to fit field conditions.

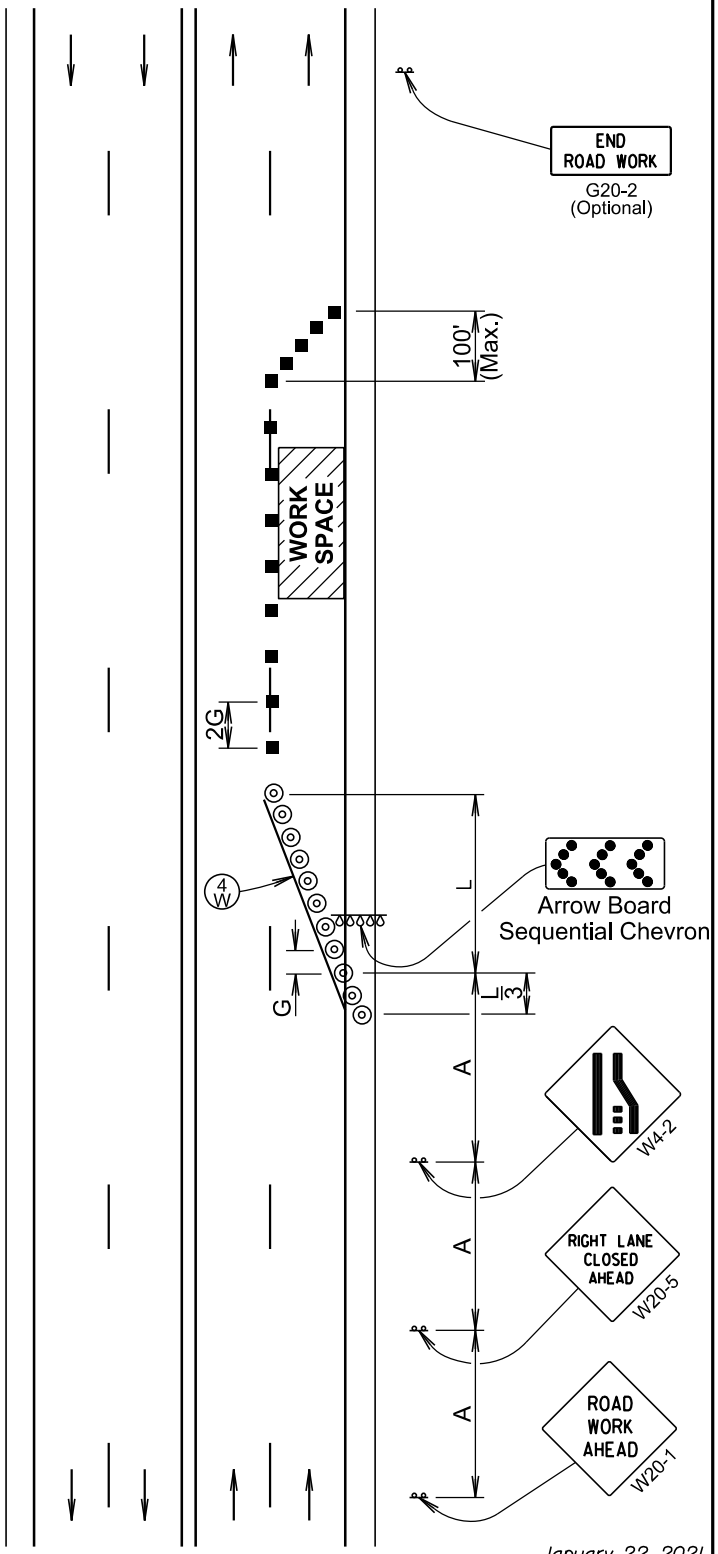

January 22, 2021

Published Date: 2nd Qtr. 2021	SDDOT	4-LANE UNDIVIDED, RIGHT LANE CLOSED	PLATE NUMBER 634.47 Sheet 1 of 1

GUARDRAIL REPAIR

BEADLE, BROOKINGS, BROWN, BUFFALO, CLARK, CODINGTON, DAY, DEUEL, EDMUNDS, FAULK, GRANT, HAMLIN, HAND, HYDE, KINGSBURY, MCPHERSON, MARSHALL, MOODY, ROBERTS, AND SPINK COUNTIES

Posted Speed Prior to Work (M.P.H.)	Spacing of Advance Warning Signs (Feet) (A) (B) (C)	Taper Length (Feet) (L)
0 - 30	200	180
35 - 40	350	320
45 - 50	500	600
55	750	660
60 - 65	1000	780
	(A) (B) (C)	
70 - 80	1000 1500 2640	960

Posted Speed Prior to Work (M.P.H.)	Length of Longitudinal Buffer Space (Feet)
20	115
25	155
30	200
35	250
40	305
45	360
50	425
55	495
60	570
65	645
70	730
75	820
80	910

Posted Speed Prior to Work (M.P.H.)	Spacing of Channelizing Devices (Feet) (G)
0 - 30	25
35 - 45	25
50	50 *
55	50 *
60 - 65	50 *
75 - 80	50 *

* Spacing is 40' for 42" cones.

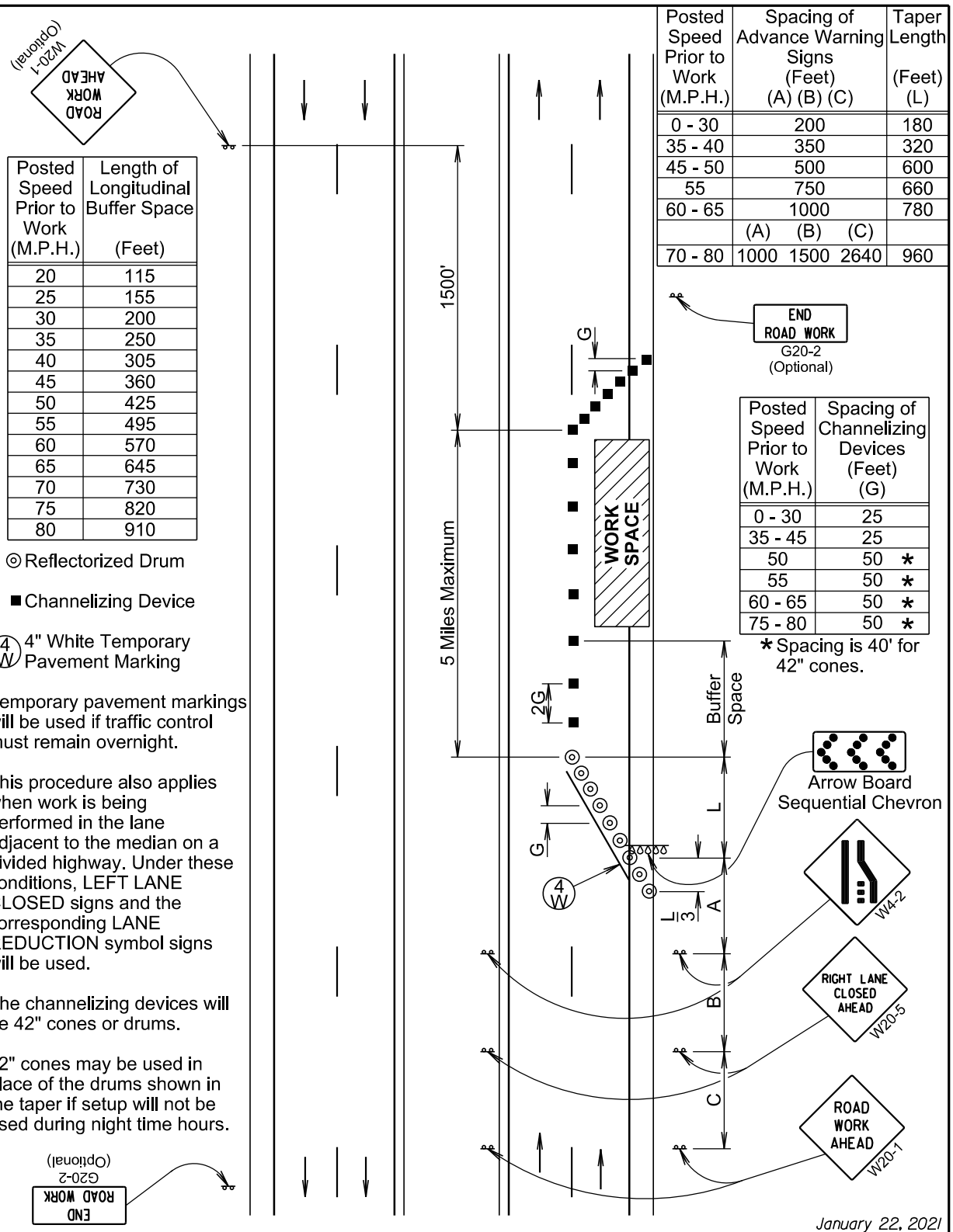

◎ Reflectorized Drum

■ Channelizing Device

(4 W) 4" White Temporary Pavement Marking

Temporary pavement markings will be used if traffic control must remain overnight.

This procedure also applies when work is being performed in the lane adjacent to the median on a divided highway. Under these conditions, LEFT LANE CLOSED signs and the corresponding LANE REDUCTION symbol signs will be used.

The channelizing devices will be 42" cones or drums.

42" cones may be used in place of the drums shown in the taper if setup will not be used during night time hours.

January 22, 2021

Published Date: 2nd Qtr. 2021	SDDOT	LANE CLOSURE WITHOUT BARRIER	PLATE NUMBER 634.64 Sheet 1 of 1

GUARDRAIL REPAIR

BEADLE, BROOKINGS, BROWN, BUFFALO, CLARK, CODINGTON, DAY, DEUEL, EDMUNDS, FAULK, GRANT, HAMLIN, HAND, HYDE, KINGSBURY, MCPHERSON, MARSHALL, MOODY, ROBERTS, AND SPINK COUNTIES

GENERAL NOTES:

Either flanged channel steel posts or S3x5.7 steel I beam posts will be used, but post type will be consistent thoughout the project. The S3x5.7 steel I beam post will be used for the end posts.

All costs associated with furnishing and constructing the 3 cable guardrail anchor assembly including the concrete anchor, cable anchor bracket, compensating device, steel turnbuckle cable assembly, and necessary hardware will be incidental to the contract unit price per each for "3 Cable Guardrail Anchor Assembly".

All costs associated with furnishing and constructing the 3 cable guardrail including posts, cable, cable splices, and hardware will be incidental to the contract unit price per foot for "3 Cable Guardrail".

The following table and criteria will apply to the arrangement of the Spring Cable End Assemblies (Compensation Devices) and Turnbuckle Cable End Assemblies:

LENGTH OF CABLE RUN	CRITERIA FOR ARRANGEMENT OF THE SPRING CABLE END ASSEMBLIES (COMPENSATION DEVICES) AND TURNBUCKLE CABLE END ASSEMBLIES
Less than 500'	Use turnbuckle on the approaching traffic end and compensating device on the other end of each individual cable, except in the W Beam to 3 Cable Transition where all compensating devices will be provided at the bridge ends.
Greater than 500' to 1000'	Use compensating device on each end of each individual cable.
Greater than 1000'	Start new run by interlacing at last parallel post as shown on sheet 2 of 6.

All Compensating Devices will be attached to the cable anchor bracket when one end of the run is attached to a bridge.

Compensating Devices must have a spring rate of 450 ± 50 pounds per inch and will have a total available travel of 6 inches minimum.

The cable will be retensioned after the initial 2 week pretension period in accordance with the following table:

CABLE TENSIONING SPECIFICATIONS														
Temperature Range (Degree F)	-20 to -11	-10 to -1	0 to 9	10 to 19	20 to 29	30 to 39	40 to 49	50 to 59	60 to 69	70 to 79	80 to 89	90 to 99	100 to 109	110 to 120
Spring Compression (Inch)	4¼	4	3¾	3½	3¼	3	2¾	2½	2¼	2	1¾	1½	1¼	1

POST SPACING FOR HORIZONTAL CURVES	
Roadway ℄ Curvature	Maximum Post Spacing (Ft)
1° and Less	16
Greater than 1° to 8°	12
Greater than 8° to 13°	8
Greater than 13°	NOT ALLOWED

September 14, 2018

Published Date: 2nd Qtr. 2021

SDDOT

3 CABLE GUARDRAIL (LOW TENSION)

PLATE NUMBER 629.01

Sheet 1 of 6

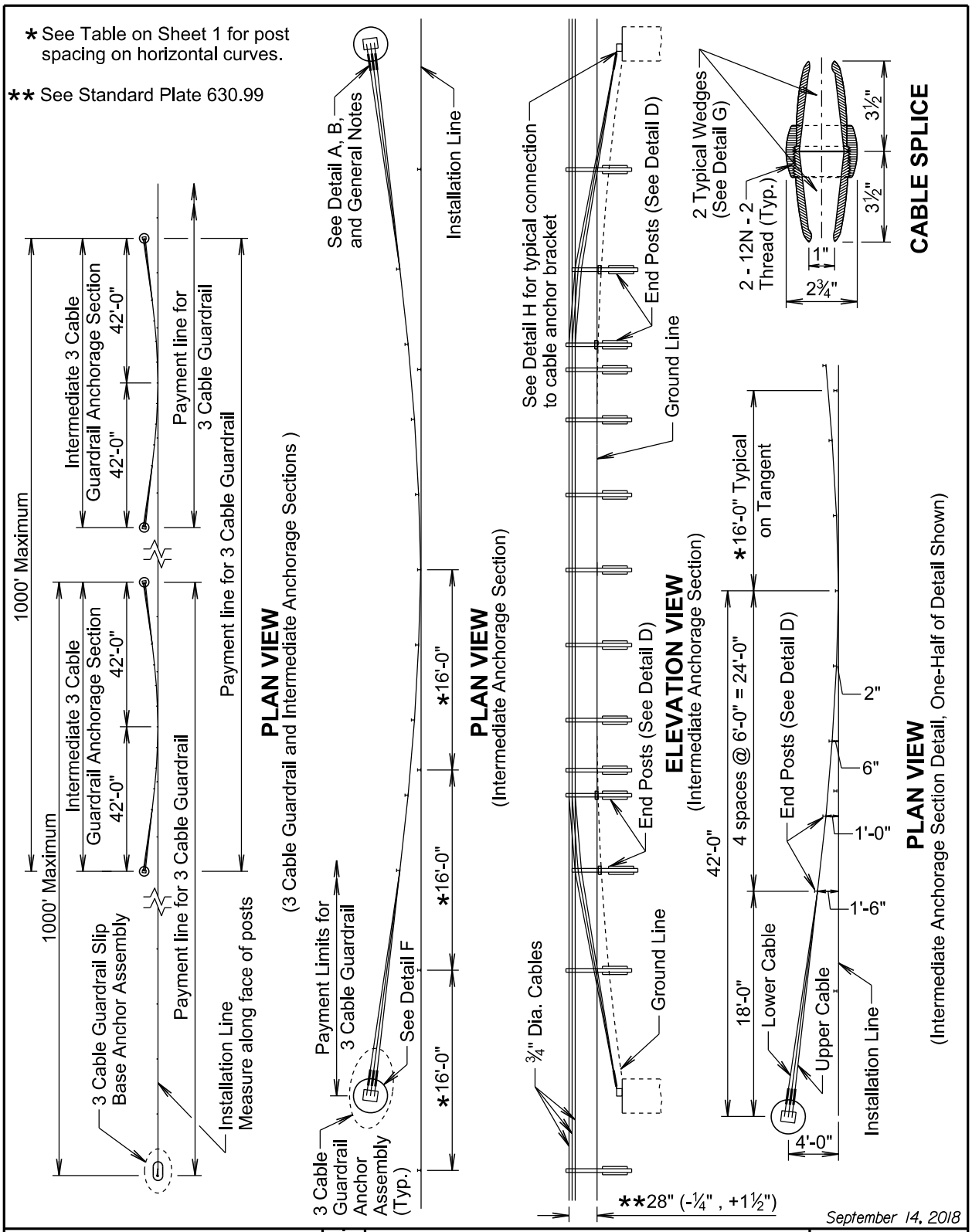
* See Table on Sheet 1 for post spacing on horizontal curves.
** See Standard Plate 630.99
1000' Maximum
Intermediate 3 Cable Guardrail Anchorage Section
42'-0"
42'-0"
Payment line for 3 Cable Guardrail
Payment line for 3 Cable Guardrail
3 Cable Guardrail Slip Base Anchor Assembly
Installation Line Measure along face of posts
PLAN VIEW
(3 Cable Guardrail and Intermediate Anchorage Sections)
See Detail A, B, and General Notes
Installation Line
Payment Limits for 3 Cable Guardrail
See Detail F
3 Cable Guardrail Anchor Assembly (Typ.)
*16'-0"
*16'-0"
*16'-0"
PLAN VIEW
(Intermediate Anchorage Section)
See Detail H for typical connection to cable anchor bracket
End Posts (See Detail D)
Ground Line
End Posts (See Detail D)
Ground Line
¾" Dia. Cables
**28" (-¼" , +1½")
ELEVATION VIEW
(Intermediate Anchorage Section)
42'-0"
4 spaces @ 6'-0" = 24'-0"
*16'-0" Typical on Tangent
18'-0"
Lower Cable
Upper Cable
4'-0"
End Posts (See Detail D)
Installation Line
2 Typical Wedges (See Detail G)
2 - 12N - 2 Thread (Typ.)
1"
2¾"
3½"
3½"
CABLE SPLICE
2"
6"
1'-0"
1'-6"
PLAN VIEW
(Intermediate Anchorage Section Detail, One-Half of Detail Shown)
September 14, 2018
Published Date: 2nd Qtr. 2021
SDDOT
3 CABLE GUARDRAIL (LOW TENSION)
PLATE NUMBER
629.01
Sheet 2 of 6

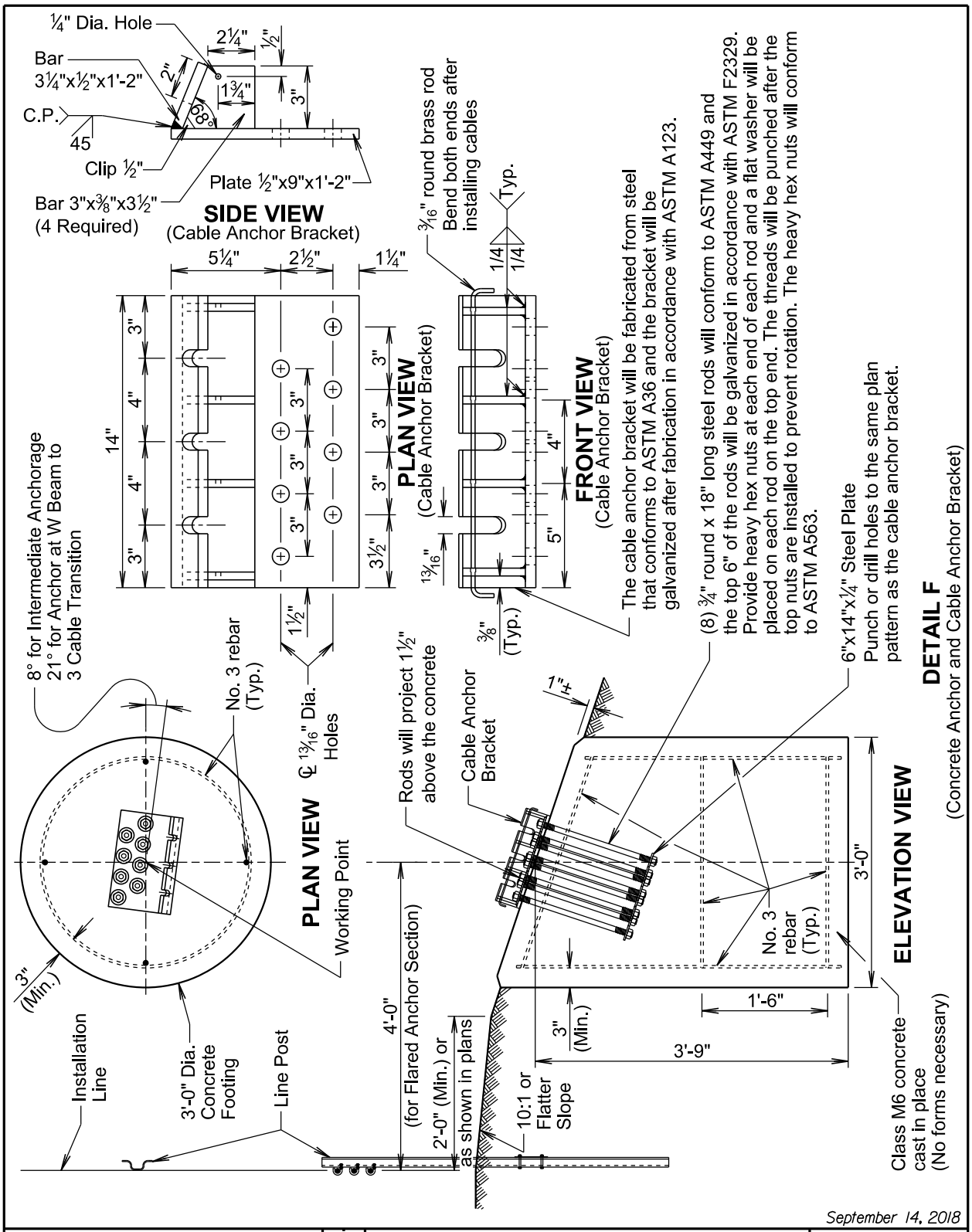
¼" Dia. Hole
Bar 3¼"x½"x1'-2"
C.P.
45
Clip ½"
Bar 3"x⅜"x3½" (4 Required)
Plate ½"x9"x1'-2"
SIDE VIEW
(Cable Anchor Bracket)
PLAN VIEW
(Cable Anchor Bracket)
FRONT VIEW
(Cable Anchor Bracket)
3/16" round brass rod Bend both ends after installing cables
The cable anchor bracket will be fabricated from steel that conforms to ASTM A36 and the bracket will be galvanized after fabrication in accordance with ASTM A123.
(8) ¾" round x 18" long steel rods will conform to ASTM A449 and the top 6" of the rods will be galvanized in accordance with ASTM F2329. Provide heavy hex nuts at each end of each rod and a flat washer will be placed on each rod on the top end. The threads will be punched after the top nuts are installed to prevent rotation. The heavy hex nuts will conform to ASTM A563.
6"x14"x¼" Steel Plate Punch or drill holes to the same plan pattern as the cable anchor bracket.
DETAIL F
(Concrete Anchor and Cable Anchor Bracket)
8° for Intermediate Anchorage 21° for Anchor at W Beam to 3 Cable Transition
No. 3 rebar (Typ.)
℄ 13/16" Dia. Holes
PLAN VIEW
Working Point
Rods will project 1½" above the concrete
Cable Anchor Bracket
ELEVATION VIEW
No. 3 rebar (Typ.)
Installation Line
3'-0" Dia. Concrete Footing
Line Post
4'-0" (for Flared Anchor Section)
2'-0" (Min.) or as shown in plans
10:1 or Flatter Slope
Class M6 concrete cast in place (No forms necessary)
September 14, 2018
Published Date: 2nd Qtr. 2021
SDDOT
3 CABLE GUARDRAIL (LOW TENSION)
PLATE NUMBER 629.01
Sheet 3 of 6

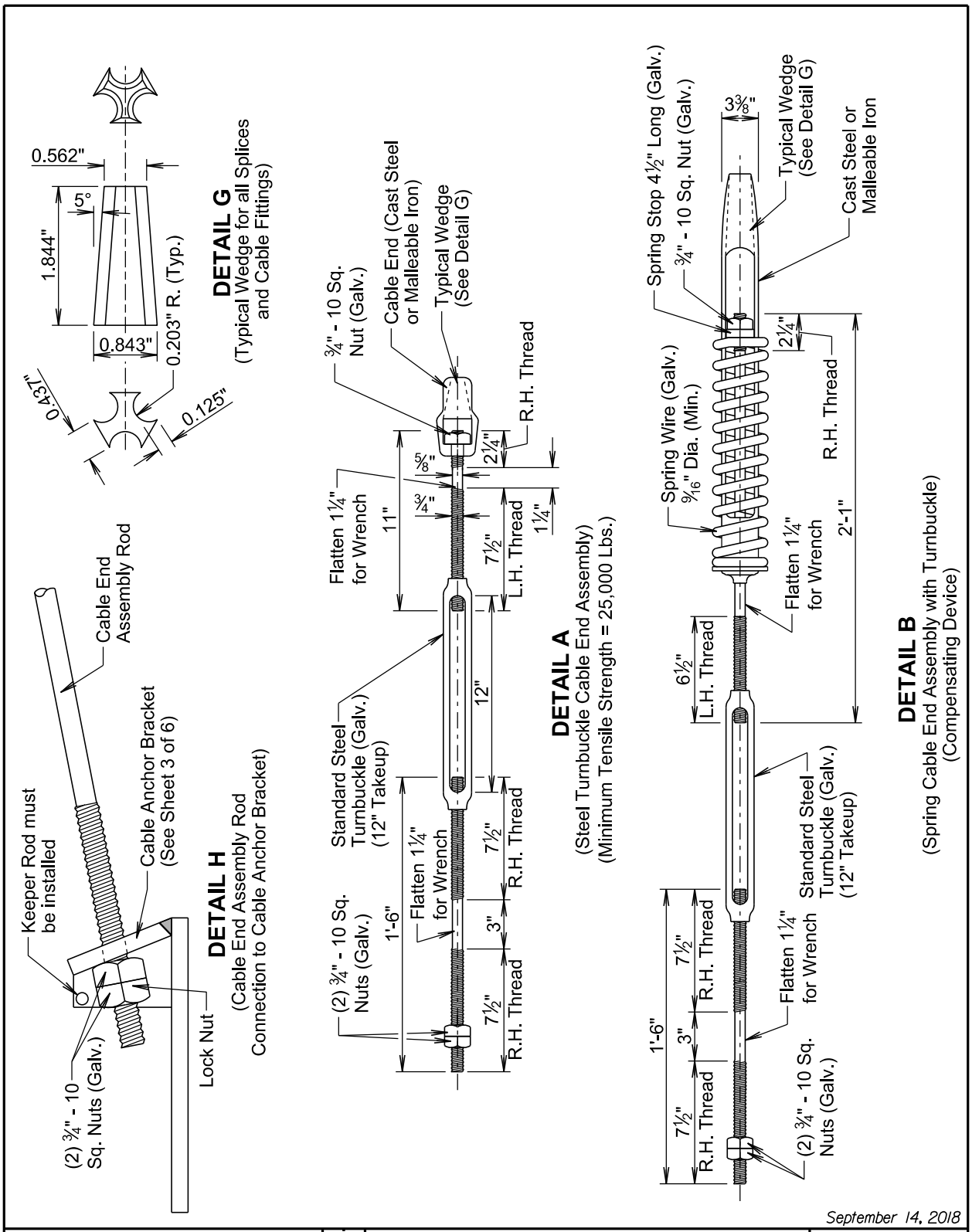
0.562"
5°
1.844"
0.843"
0.203" R. (Typ.)
0.437"
0.125"
DETAIL G
(Typical Wedge for all Splices and Cable Fittings)
Cable End Assembly Rod
Keeper Rod must be installed
Cable Anchor Bracket (See Sheet 3 of 6)
(2) ¾" - 10 Sq. Nuts (Galv.)
Lock Nut
DETAIL H
(Cable End Assembly Rod Connection to Cable Anchor Bracket)
¾" - 10 Sq. Nut (Galv.)
Cable End (Cast Steel or Malleable Iron)
Typical Wedge (See Detail G)
R.H. Thread
⅝"
¾"
2¼"
Flatten 1¼" for Wrench
11"
7½"
L.H. Thread
1¼"
12"
Standard Steel Turnbuckle (Galv.) (12" Takeup)
Flatten 1¼" for Wrench
7½"
R.H. Thread
3"
(2) ¾" - 10 Sq. Nuts (Galv.)
1'-6"
7½"
R.H. Thread
DETAIL A
(Steel Turnbuckle Cable End Assembly)
(Minimum Tensile Strength = 25,000 Lbs.)
Spring Stop 4½" Long (Galv.)
¾" - 10 Sq. Nut (Galv.)
3⅜"
Typical Wedge (See Detail G)
Cast Steel or Malleable Iron
2¼"
Spring Wire (Galv.) 9/16" Dia. (Min.)
R.H. Thread
2'-1"
Flatten 1¼" for Wrench
6½"
L.H. Thread
Standard Steel Turnbuckle (Galv.) (12" Takeup)
Flatten 1¼" for Wrench
7½"
R.H. Thread
3"
1'-6"
7½"
R.H. Thread
(2) ¾" - 10 Sq. Nuts (Galv.)
DETAIL B
(Spring Cable End Assembly with Turnbuckle)
(Compensating Device)
September 14, 2018
Published Date: 2nd Qtr. 2021
SDDOT
3 CABLE GUARDRAIL
(LOW TENSION)
PLATE NUMBER
629.01
Sheet 4 of 6

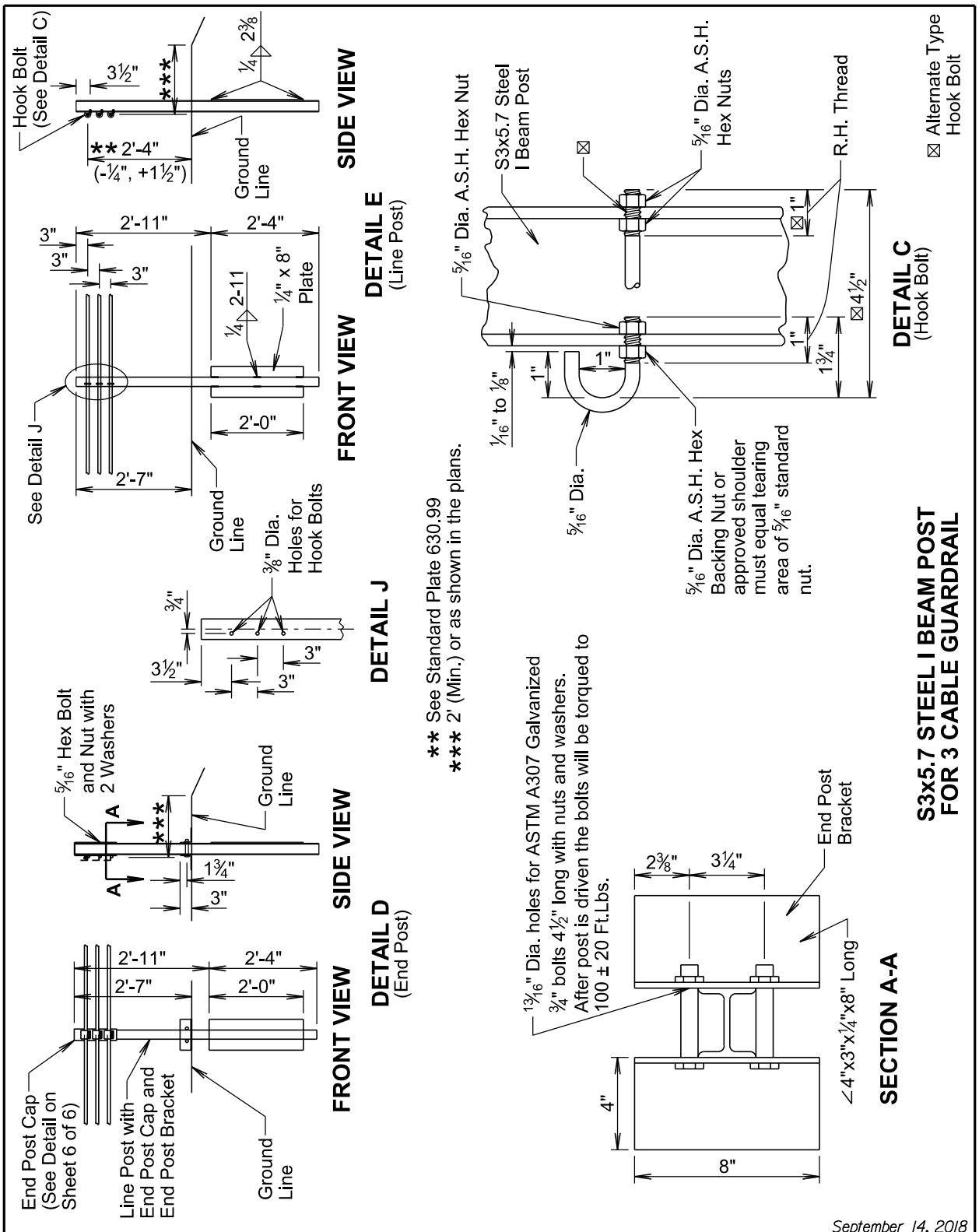
Hook Bolt (See Detail C)
3½"
***
¼ 2⅜
** 2'-4"
(-¼", +1½")
Ground Line
SIDE VIEW
DETAIL E
(Line Post)
3"
3"
3"
2'-11"
2'-4"
¼ 2-11
¼" x 8" Plate
2'-0"
2'-7"
See Detail J
Ground Line
FRONT VIEW
⅜" Dia. Holes for Hook Bolts
¾"
3½"
3"
3"
DETAIL J
5/16" Hex Bolt and Nut with 2 Washers
A
A
***
Ground Line
1¾"
3"
SIDE VIEW
DETAIL D
(End Post)
2'-11"
2'-4"
2'-7"
2'-0"
End Post Cap (See Detail on Sheet 6 of 6)
Line Post with End Post Cap and End Post Bracket
Ground Line
FRONT VIEW
** See Standard Plate 630.99
*** 2' (Min.) or as shown in the plans.
5/16" Dia. A.S.H. Hex Nut
S3x5.7 Steel I Beam Post
⊠
5/16" Dia. A.S.H. Hex Nuts
R.H. Thread
⊠ Alternate Type Hook Bolt
⊠1"
⊠4½"
1"
1¾"
1"
1"
1/16" to ⅛"
5/16" Dia.
5/16" Dia. A.S.H. Hex Backing Nut or approved shoulder must equal tearing area of 5/16" standard nut.
DETAIL C
(Hook Bolt)
S3x5.7 STEEL I BEAM POST FOR 3 CABLE GUARDRAIL
13/16" Dia. holes for ASTM A307 Galvanized ¾" bolts 4½" long with nuts and washers. After post is driven the bolts will be torqued to 100 ± 20 Ft.Lbs.
2⅜"
3¼"
End Post Bracket
4"
8"
∠4"x3"x¼"x8" Long
SECTION A-A
September 14, 2018
Published Date: 2nd Qtr. 2021
SDDOT
3 CABLE GUARDRAIL (LOW TENSION)
PLATE NUMBER
629.01
Sheet 5 of 6

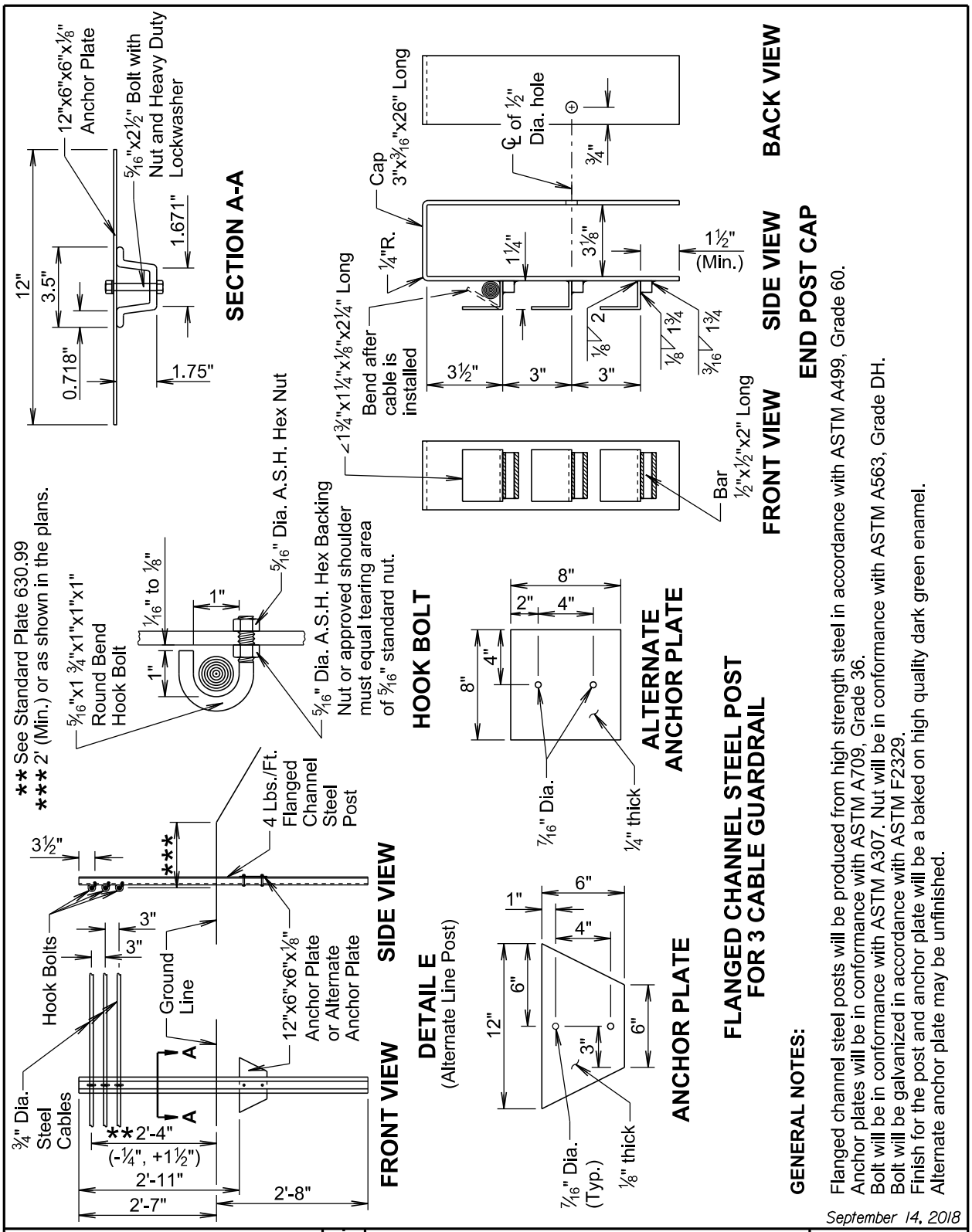
12"x6"x6"x⅛" Anchor Plate
5/16"x2½" Bolt with Nut and Heavy Duty Lockwasher
12"
3.5"
0.718"
1.671"
1.75"
SECTION A-A
Cap 3"x3/16"x26" Long
℄ of ½" Dia. hole
¼"R.
1¼"
3⅛"
¾"
1½" (Min.)
Bend after cable is installed
3½"
3"
3"
⅛" 2
⅛" 1¾
3/16" 1¾
∠1¾"x1¼"x⅛"x2¼" Long
Bar ½"x½"x2" Long
BACK VIEW
SIDE VIEW
END POST CAP
FRONT VIEW
** See Standard Plate 630.99
*** 2' (Min.) or as shown in the plans.
5/16"x1¾"x1"x1" Round Bend Hook Bolt
1/16" to ⅛"
1"
1"
5/16" Dia. A.S.H. Hex Nut
5/16" Dia. A.S.H. Hex Backing Nut or approved shoulder must equal tearing area of 5/16" standard nut.
HOOK BOLT
8"
2"
4"
4"
8"
7/16" Dia.
¼" thick
ALTERNATE ANCHOR PLATE
FLANGED CHANNEL STEEL POST FOR 3 CABLE GUARDRAIL
3½"
***
4 Lbs./Ft. Flanged Channel Steel Post
Hook Bolts
3"
3"
Ground Line
12"x6"x⅛" Anchor Plate or Alternate Anchor Plate
¾" Dia. Steel Cables
A
A
**2'-4"
(-¼", +1½")
2'-11"
2'-7"
2'-8"
FRONT VIEW
SIDE VIEW
DETAIL E
(Alternate Line Post)
1"
6"
4"
12"
6"
3"
6"
7/16" Dia. (Typ.)
⅛" thick
ANCHOR PLATE
GENERAL NOTES:
Flanged channel steel posts will be produced from high strength steel in accordance with ASTM A499, Grade 60.
Anchor plates will be in conformance with ASTM A709, Grade 36.
Bolt will be in conformance with ASTM A307. Nut will be in conformance with ASTM A563, Grade DH.
Bolt will be galvanized in accordance with ASTM F2329.
Finish for the post and anchor plate will be a baked on high quality dark green enamel.
Alternate anchor plate may be unfinished.
September 14, 2018
Published Date: 2nd Qtr. 2021
SDDOT
3 CABLE GUARDRAIL (LOW TENSION)
PLATE NUMBER
629.01
Sheet 6 of 6

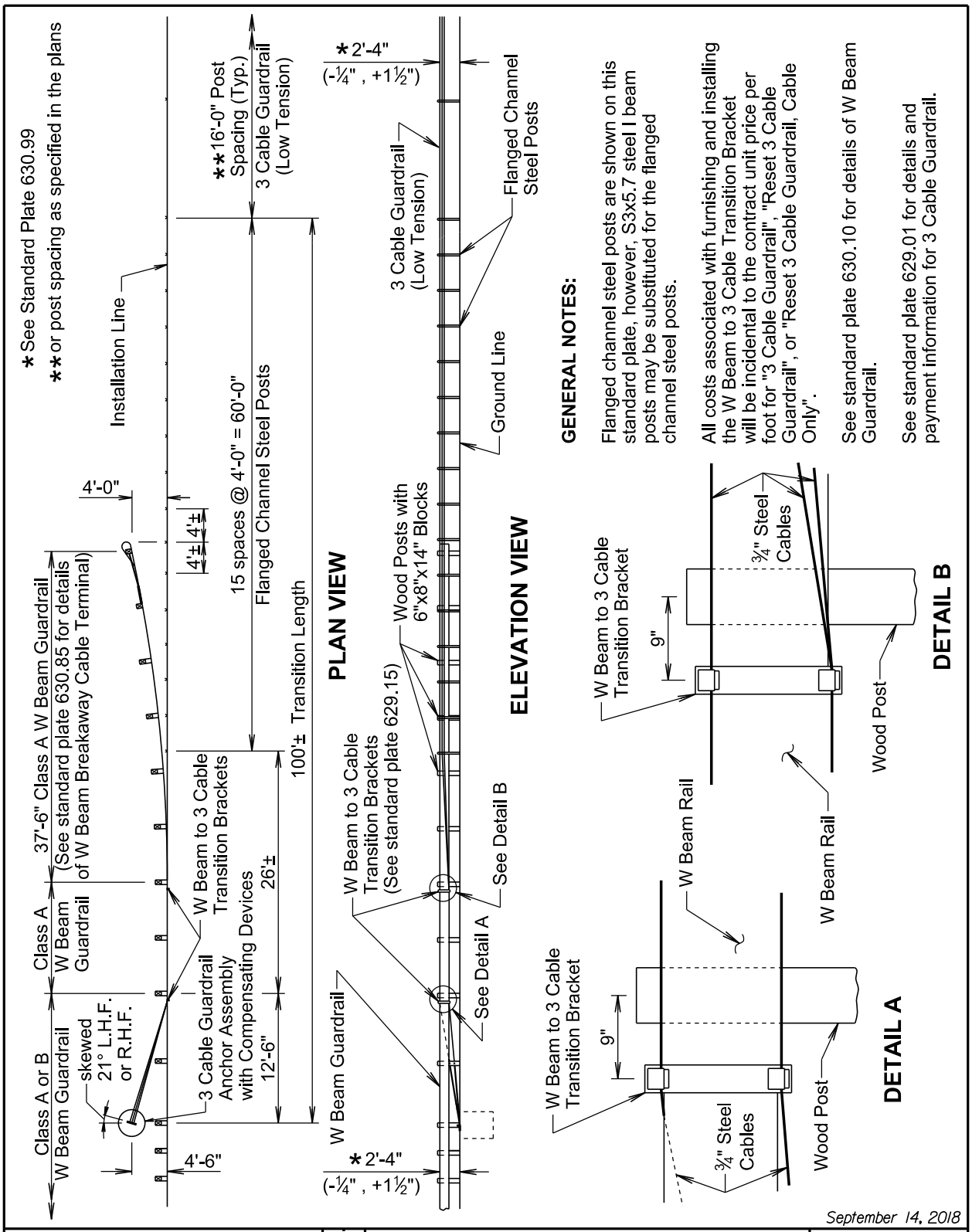
* See Standard Plate 630.99
** or post spacing as specified in the plans
Installation Line
4'-0"
4'±
4'±
37'-6" Class A W Beam Guardrail
(See standard plate 630.85 for details of W Beam Breakaway Cable Terminal)
Class A
W Beam
Guardrail
Class A or B
W Beam Guardrail
skewed
21° L.H.F.
or R.H.F.
4'-6"
3 Cable Guardrail
Anchor Assembly
with Compensating Devices
12'-6"
W Beam to 3 Cable
Transition Brackets
26'±
15 spaces @ 4'-0" = 60'-0"
Flanged Channel Steel Posts
100'± Transition Length
**16'-0" Post
Spacing (Typ.)
3 Cable Guardrail
(Low Tension)
PLAN VIEW
* 2'-4"
(-¼" , +1½")
W Beam Guardrail
* 2'-4"
(-¼" , +1½")
W Beam to 3 Cable
Transition Brackets
(See standard plate 629.15)
Wood Posts with
6"x8"x14" Blocks
See Detail A
See Detail B
3 Cable Guardrail
(Low Tension)
Flanged Channel
Steel Posts
Ground Line
ELEVATION VIEW
GENERAL NOTES:
Flanged channel steel posts are shown on this standard plate, however, S3x5.7 steel I beam posts may be substituted for the flanged channel steel posts.
All costs associated with furnishing and installing the W Beam to 3 Cable Transition Bracket will be incidental to the contract unit price per foot for "3 Cable Guardrail", "Reset 3 Cable Guardrail", or "Reset 3 Cable Guardrail, Cable Only".
See standard plate 630.10 for details of W Beam Guardrail.
See standard plate 629.01 for details and payment information for 3 Cable Guardrail.
W Beam to 3 Cable
Transition Bracket
9"
¾" Steel
Cables
Wood Post
W Beam Rail
DETAIL A
W Beam to 3 Cable
Transition Bracket
9"
¾" Steel
Cables
Wood Post
W Beam Rail
DETAIL B
September 14, 2018
Published Date: 2nd Qtr. 2021
SDDOT
W BEAM TO 3 CABLE TRANSITION
PLATE NUMBER
629.05
Sheet 1 of 1

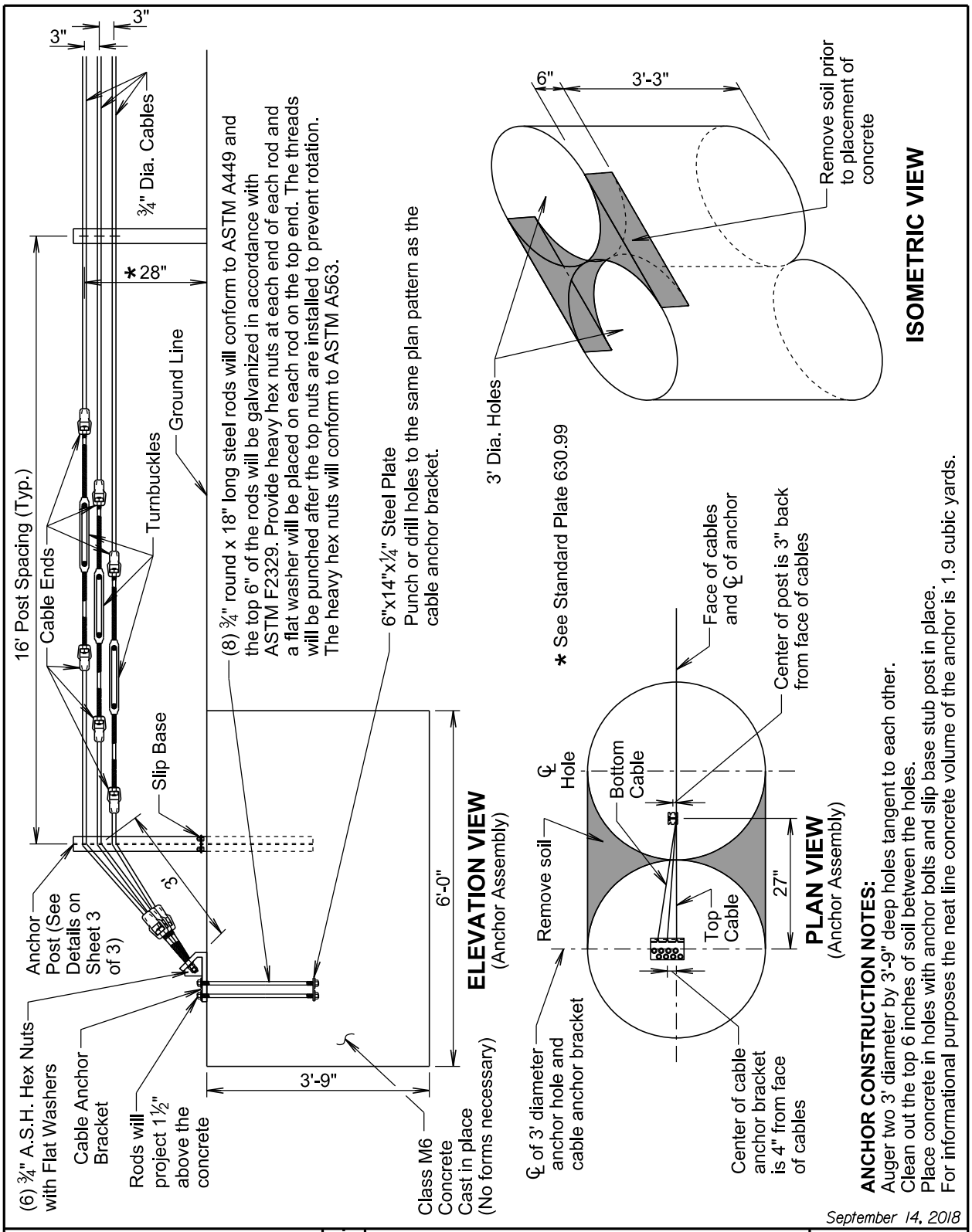
3"
3"
¾" Dia. Cables
16' Post Spacing (Typ.)
Cable Ends
Turnbuckles
Ground Line
* 28"
Slip Base
Anchor Post (See Details on Sheet 3 of 3)
(6) ¾" A.S.H. Hex Nuts with Flat Washers
Cable Anchor Bracket
Rods will project 1½" above the concrete
(8) ¾" round x 18" long steel rods will conform to ASTM A449 and the top 6" of the rods will be galvanized in accordance with ASTM F2329. Provide heavy hex nuts at each end of each rod and a flat washer will be placed on each rod on the top end. The threads will be punched after the top nuts are installed to prevent rotation. The heavy hex nuts will conform to ASTM A563.
6"x14"x¼" Steel Plate Punch or drill holes to the same plan pattern as the cable anchor bracket.
6'-0"
3'-9"
Class M6 Concrete Cast in place (No forms necessary)
ELEVATION VIEW
(Anchor Assembly)
6"
3'-3"
Remove soil prior to placement of concrete
3' Dia. Holes
ISOMETRIC VIEW
* See Standard Plate 630.99
Face of cables and ℄ of anchor
Center of post is 3" back from face of cables
℄ Hole
Bottom Cable
Remove soil
Top Cable
27"
℄ of 3' diameter anchor hole and cable anchor bracket
Center of cable anchor bracket is 4" from face of cables
PLAN VIEW
(Anchor Assembly)
ANCHOR CONSTRUCTION NOTES:
Auger two 3' diameter by 3'-9" deep holes tangent to each other.
Clean out the top 6 inches of soil between the holes.
Place concrete in holes with anchor bolts and slip base stub post in place.
For informational purposes the neat line concrete volume of the anchor is 1.9 cubic yards.
September 14, 2018
Published Date: 2nd Qtr. 2021
SDDOT
3 CABLE GUARDRAIL SLIP BASE ANCHOR ASSEMBLY
PLATE NUMBER
629.10
Sheet 1 of 3

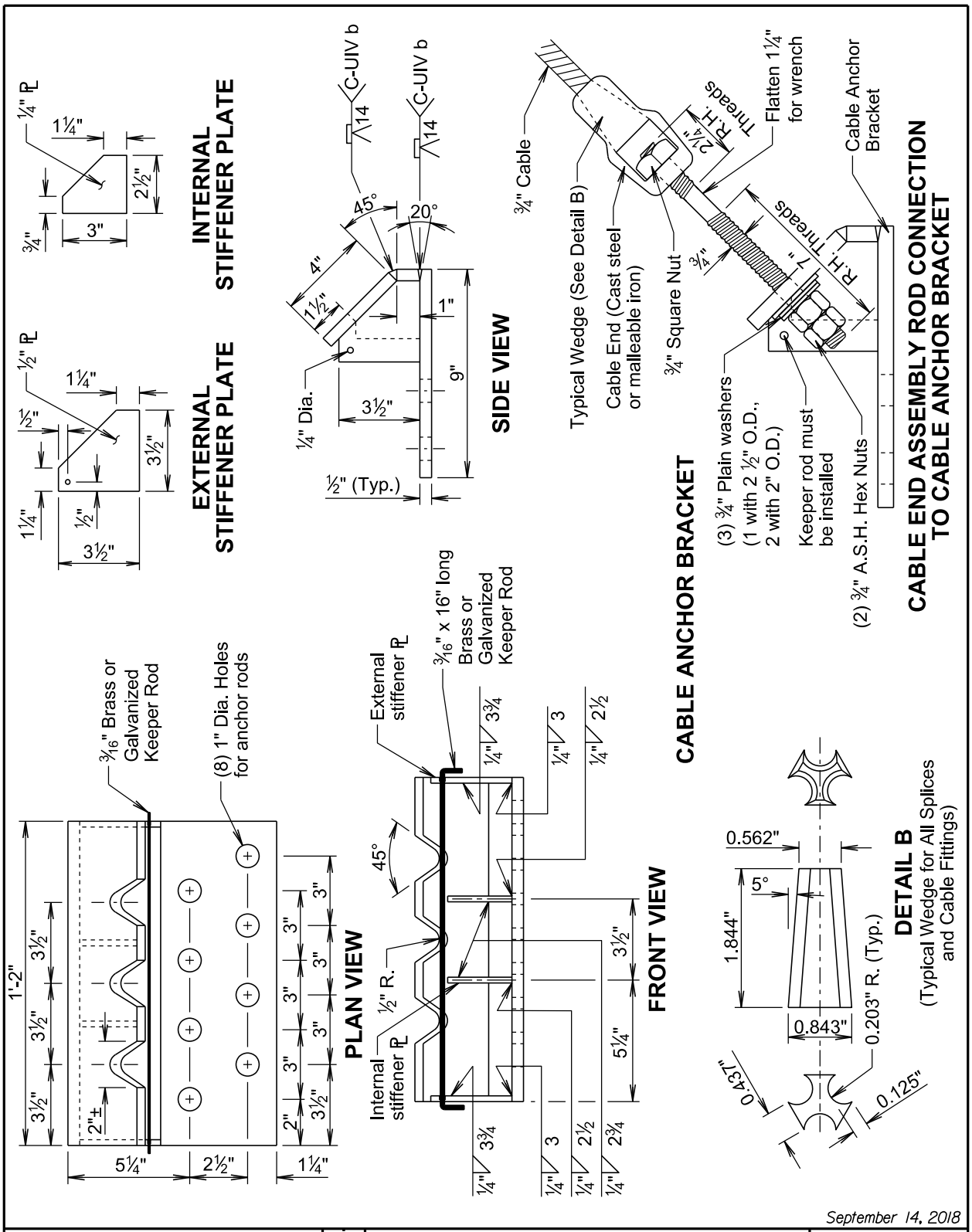

Published Date: 2nd Qtr. 2021	SDDOT	3 CABLE GUARDRAIL SLIP BASE ANCHOR ASSEMBLY	PLATE NUMBER 629.10 Sheet 2 of 3

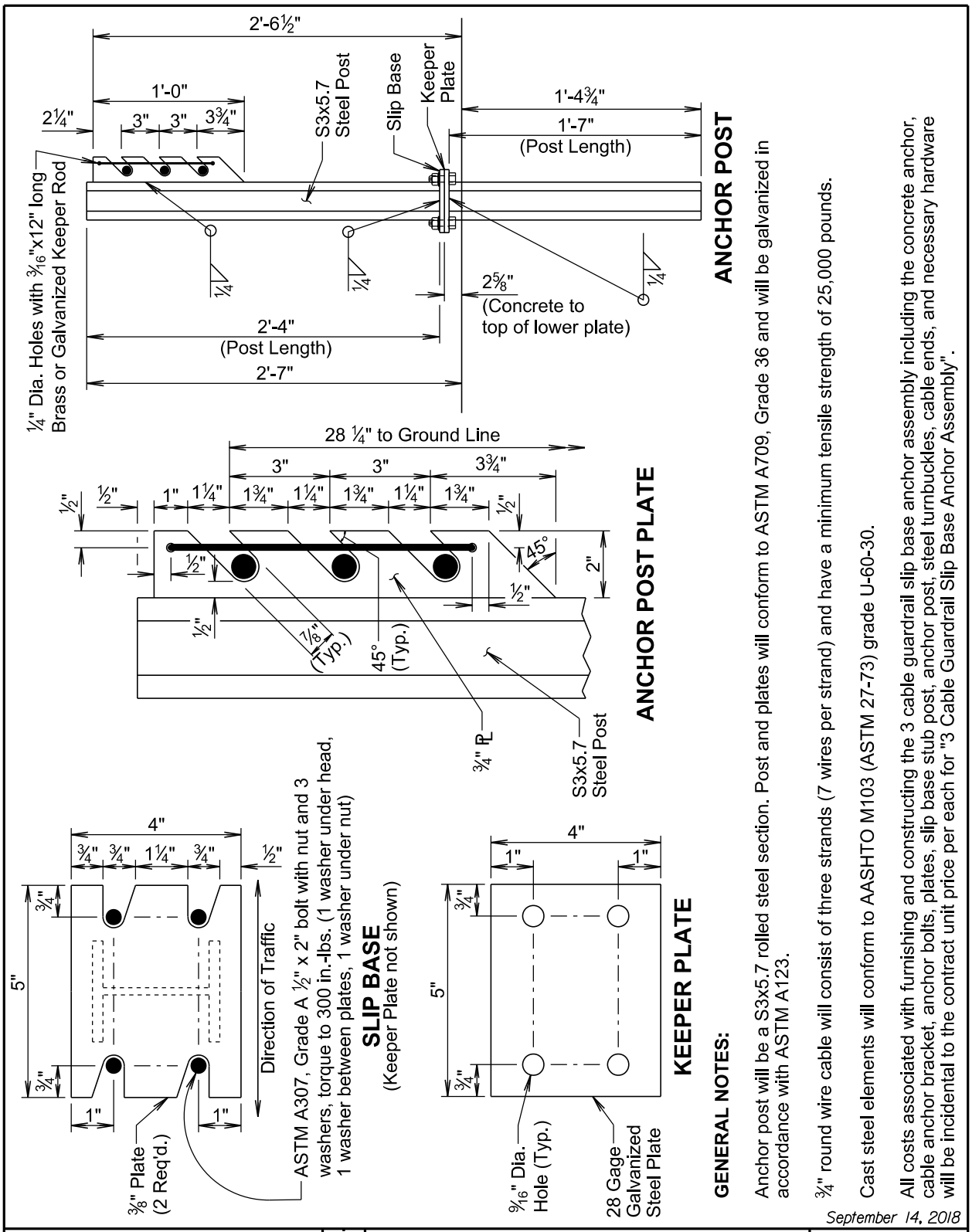
2'-6½"
1'-0"
2¼"
3" 3" 3¾"
S3x5.7 Steel Post
Slip Base
Keeper Plate
1'-4¾"
1'-7"
(Post Length)
¼" Dia. Holes with 3/16"x12" long Brass or Galvanized Keeper Rod
¼
2⅝"
(Concrete to top of lower plate)
2'-4"
(Post Length)
2'-7"
ANCHOR POST
28 ¼" to Ground Line
3" 3" 3¾"
½" 1" 1¼" 1¾" 1¼" 1¾" 1¼" 1¾" ½"
45°
2"
⅞" (Typ.)
45° (Typ.)
¾" PL
S3x5.7 Steel Post
ANCHOR POST PLATE
4"
¾" ¾" 1¼" ¾" ½"
5"
¾"
1" 1"
Direction of Traffic
⅜" Plate (2 Req'd.)
ASTM A307, Grade A ½" x 2" bolt with nut and 3 washers, torque to 300 in.-lbs. (1 washer under head, 1 washer between plates, 1 washer under nut)
SLIP BASE
(Keeper Plate not shown)
4"
1" 1"
9/16" Dia. Hole (Typ.)
28 Gage Galvanized Steel Plate
KEEPER PLATE
GENERAL NOTES:
Anchor post will be a S3x5.7 rolled steel section. Post and plates will conform to ASTM A709, Grade 36 and will be galvanized in accordance with ASTM A123.
¾" round wire cable will consist of three strands (7 wires per strand) and have a minimum tensile strength of 25,000 pounds.
Cast steel elements will conform to AASHTO M103 (ASTM 27-73) grade U-60-30.
All costs associated with furnishing and constructing the 3 cable guardrail slip base anchor assembly including the concrete anchor, cable anchor bracket, anchor bolts, plates, slip base stub post, anchor post, steel turnbuckles, cable ends, and necessary hardware will be incidental to the contract unit price per each for "3 Cable Guardrail Slip Base Anchor Assembly".
September 14, 2018
Published Date: 2nd Qtr. 2021
SDDOT
3 CABLE GUARDRAIL SLIP BASE ANCHOR ASSEMBLY
PLATE NUMBER
629.10
Sheet 3 of 3

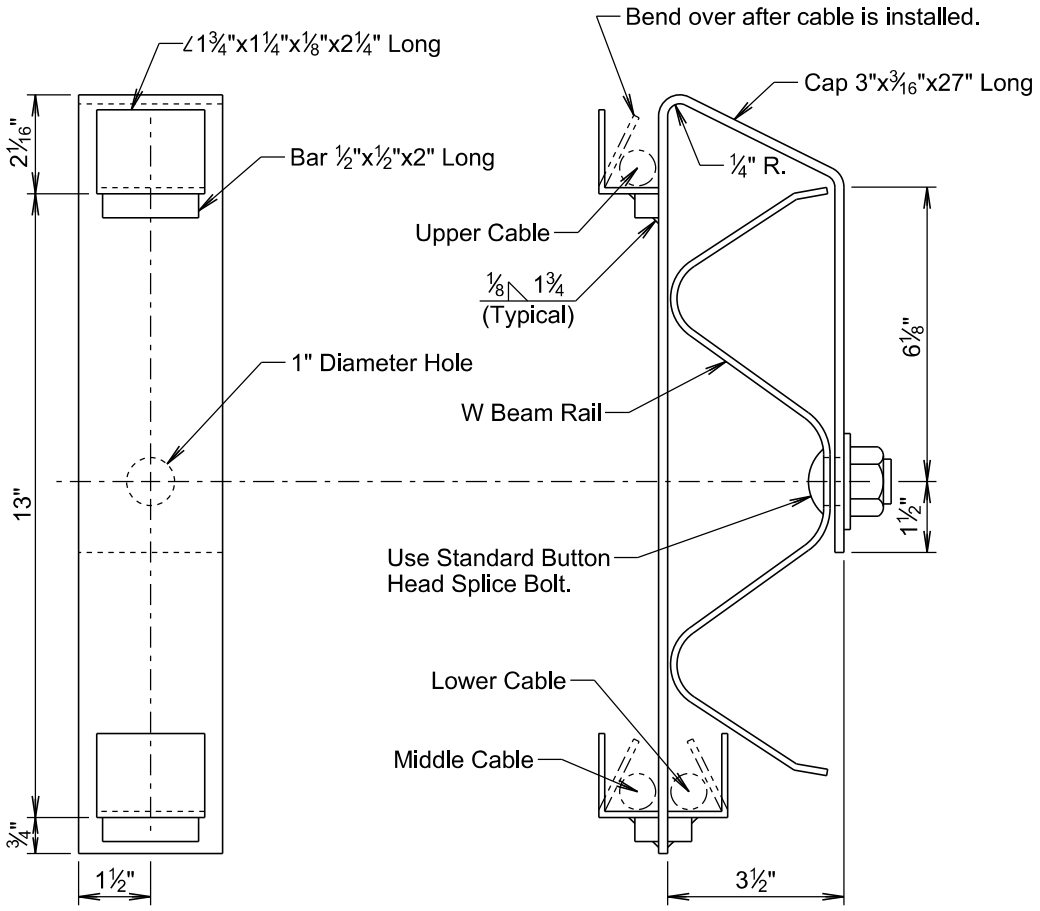

ELEVATION VIEW
(Transition Bracket)

END VIEW
(W Beam Rail and Transition Bracket)

GENERAL NOTES:

Steel used in the fabrication of the bracket will conform to ASTM A36 and the bracket will be galvanized after fabrication in accordance with ASTM A123.

September 14, 2018

Published Date: 2nd Qtr. 2021	SDDOT	W BEAM TO 3 CABLE TRANSITION BRACKET	PLATE NUMBER 629.15 Sheet 1 of 1

GUARDRAIL REPAIR

BEADLE, BROOKINGS, BROWN, BUFFALO, CLARK, CODINGTON, DAY, DEUEL, EDMUNDS, FAULK, GRANT, HAMLIN, HAND, HYDE, KINGSBURY, MCPHERSON, MARSHALL, MOODY, ROBERTS, AND SPINK COUNTIES

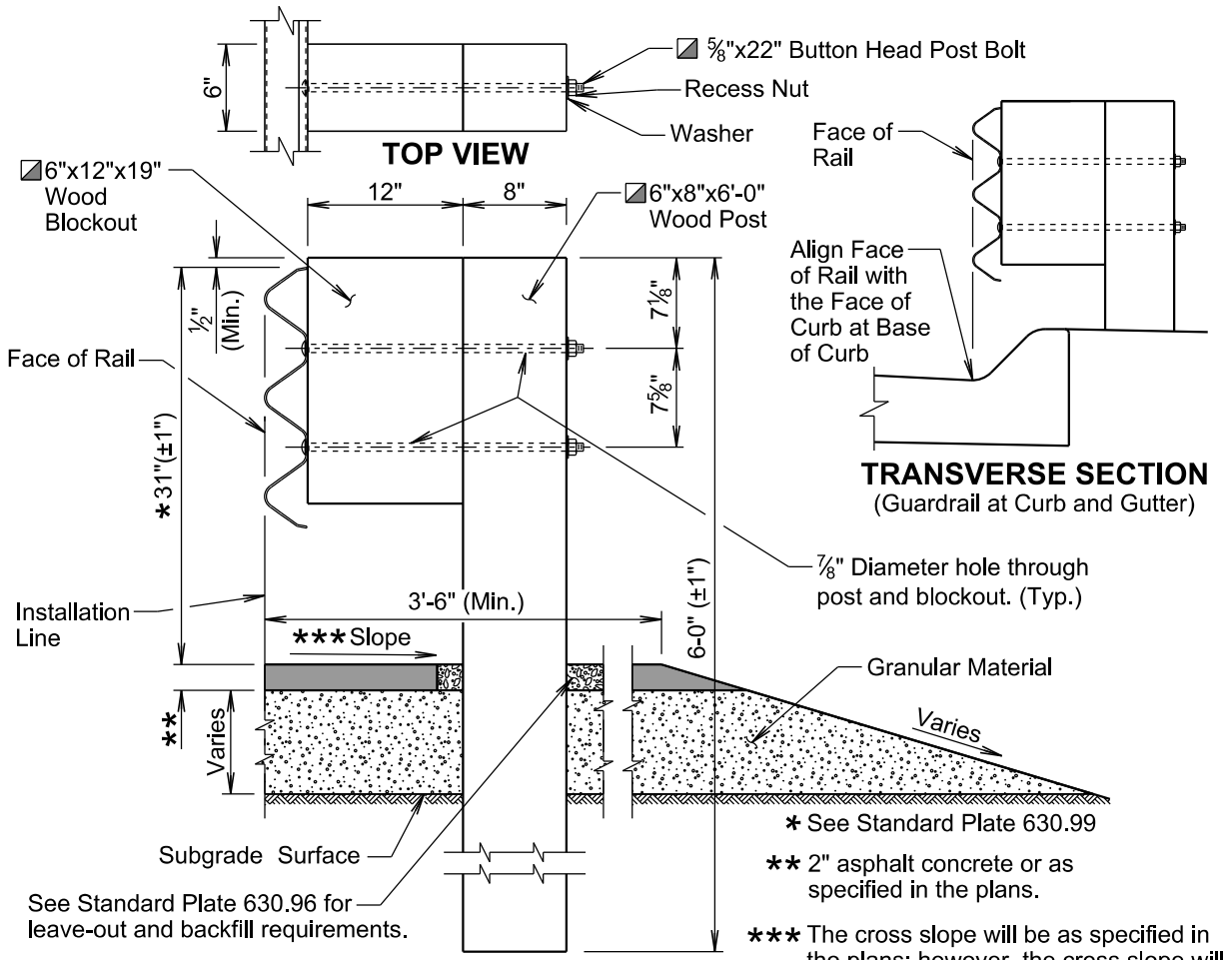

* See Standard Plate 630.99

** 2" asphalt concrete or as specified in the plans.

*** The cross slope will be as specified in the plans; however, the cross slope will not be steeper than a 10:1 slope.

GENERAL NOTES:

Asphalt concrete will be the same type used elsewhere on the project or will be as specified in the plans. If asphalt concrete is not specified in the plans, the asphalt concrete will conform to the Specifications for "Asphalt Concrete Composite."

Granular material will be the same type used elsewhere on the project or will be as specified in the plans. If granular material type is not specified in the plans, the material will conform to the Specifications for "Base Course". The granular material will be placed the same thickness as the mainline surfacing or as specified in the plans.

Topsoil is not shown in the transverse section drawing.

◪ The post and blockout illustrated above is typical for single thrie beam guardrail. When other variations of posts and blockouts are specified on other standard plates (e.g. transitions) then the posts and blockouts will be as specified on the other standard plates or as specified in the plans.

Slots in the rails will be provided as specified in the plans and by the manufacturer. A drilled hole through the rail is not allowed as a replacement for a slot. If the Contractor must create a slot, a cutting torch or plasma cutter is not allowed. The slot edges will be smooth and free of burrs or notches.

The top of post and top of block will have a true square cut. The top of block will be a maximum of ±½ inch from the top of the post.

September 14, 2019

Published Date: 2nd Qtr. 2021	SDDOT	*THRIE BEAM GUARDRAIL*	PLATE NUMBER 630.01 Sheet 1 of 5

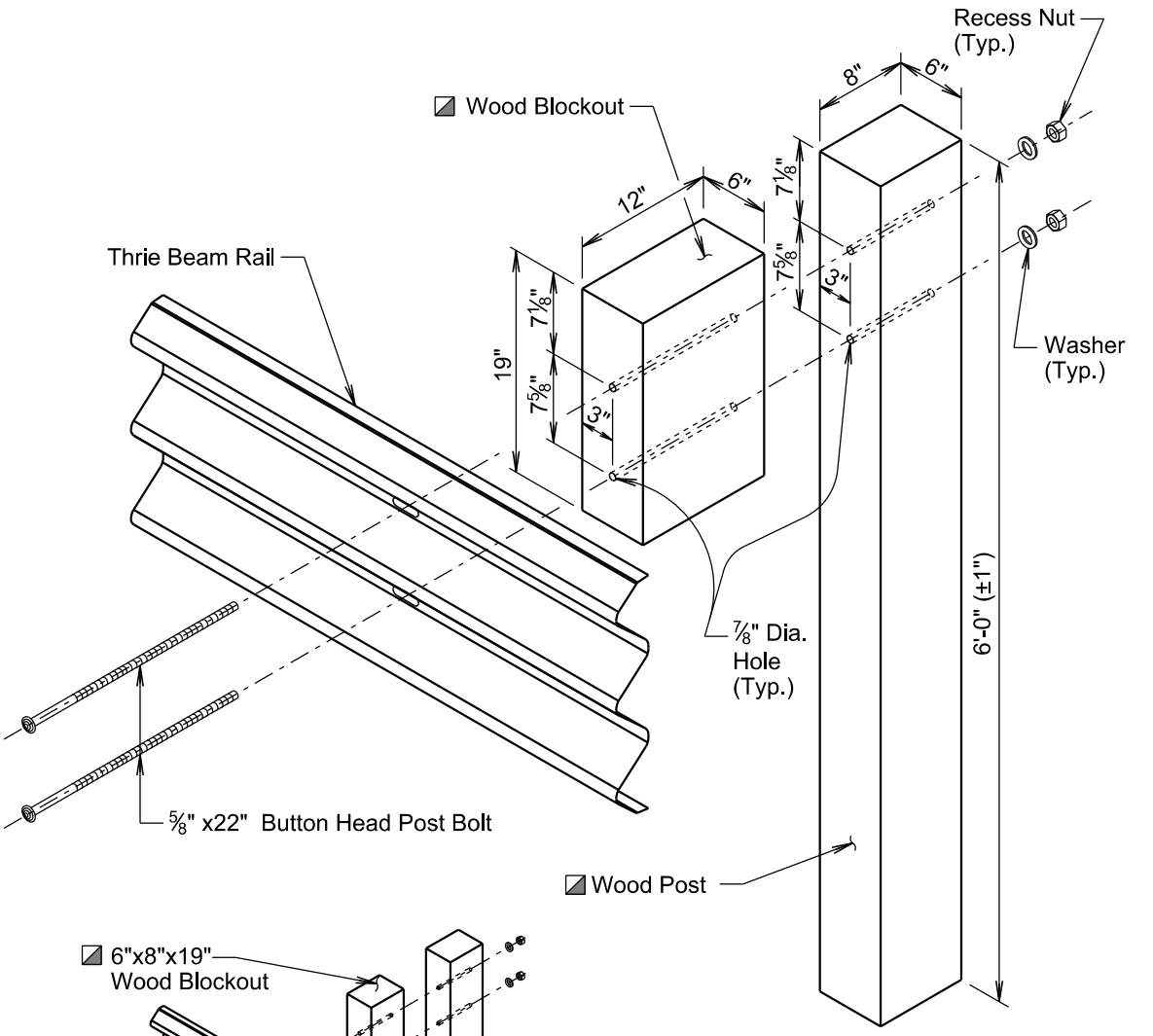

EXPANDED ISOMETRIC VIEW AT MIDSPAN OF THRIE BEAM GUARDRAIL

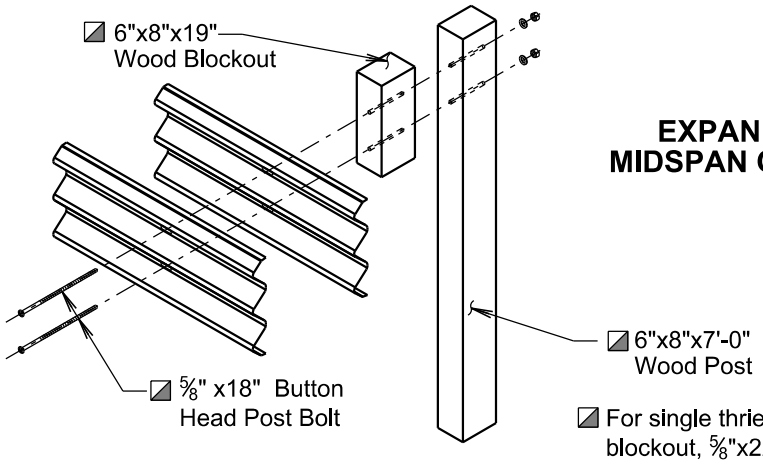

EXPANDED ISOMETRIC VIEW OF DOUBLE (NESTED) THRIE BEAM GUARDRAIL AT MIDSPAN
(For Information Only, Not to Scale)

For single thrie beam guardrail use 6"x12"x19" wood blockout, 5/8"x22" button head post bolt, and 6"x8"x6'-0" wood post. For double (nested) thrie beam guardrail use 6"x8"x19" wood blockout, 5/8"x18" button head post bolt, and 6"x8"x7'-0" wood post.

September 14, 2019

Published Date: 2nd Qtr. 2021	SDDOT	THRIE BEAM GUARDRAIL	PLATE NUMBER 630.01 Sheet 2 of 5

GUARDRAIL REPAIR

BEADLE, BROOKINGS, BROWN, BUFFALO, CLARK, CODINGTON, DAY, DEUEL, EDMUNDS, FAULK, GRANT, HAMLIN, HAND, HYDE, KINGSBURY, MCPHERSON, MARSHALL, MOODY, ROBERTS, AND SPINK COUNTIES

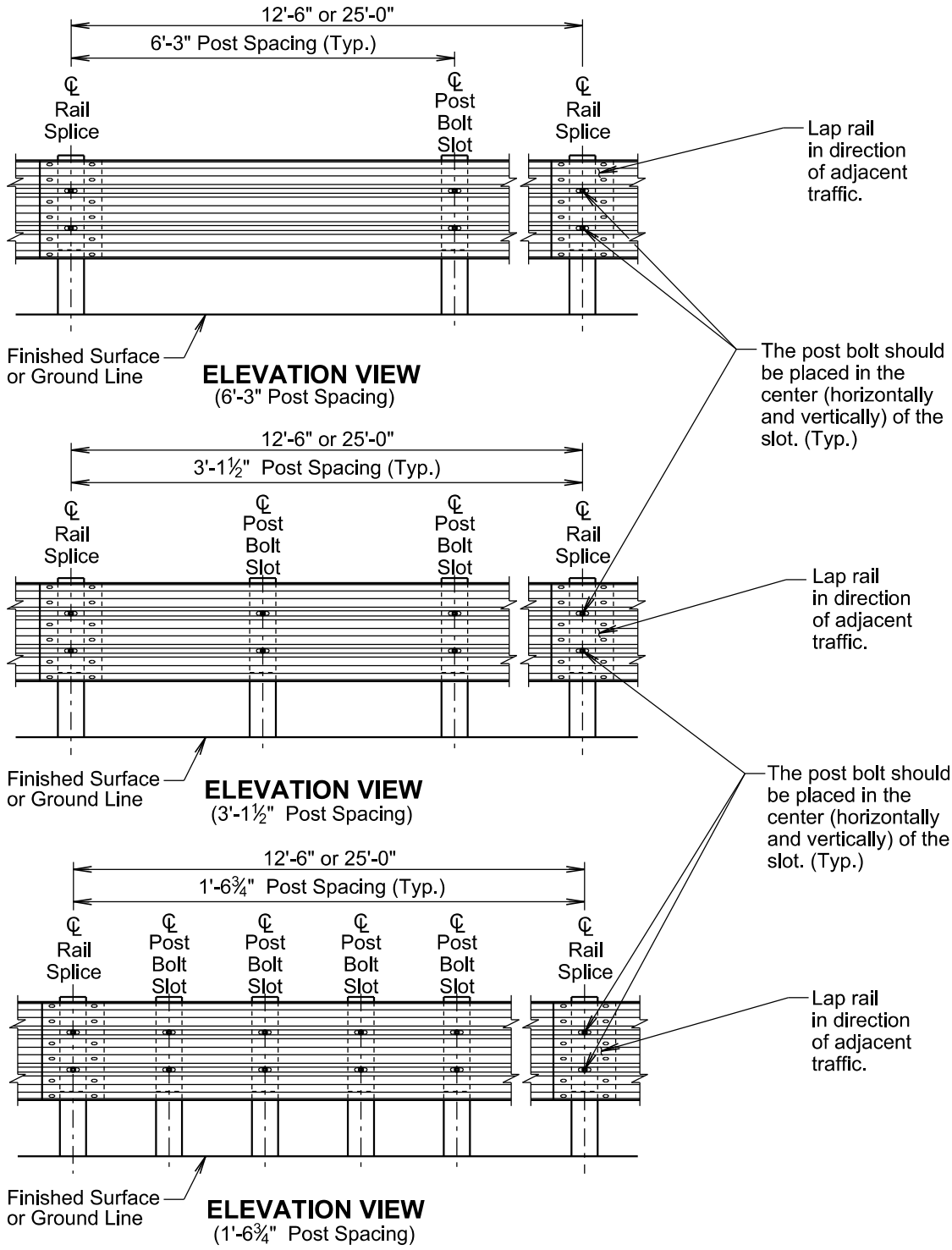

September 14, 2019

Published Date: 2nd Qtr. 2021	SDDOT	THRIE BEAM GUARDRAIL	PLATE NUMBER 630.01 Sheet 3 of 5

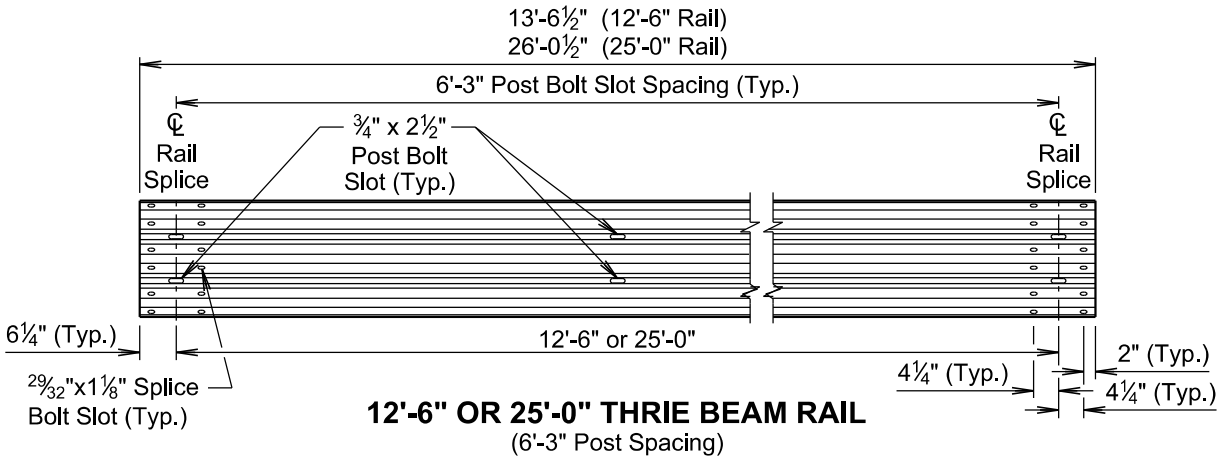

12'-6" OR 25'-0" THRIE BEAM RAIL
(6'-3" Post Spacing)

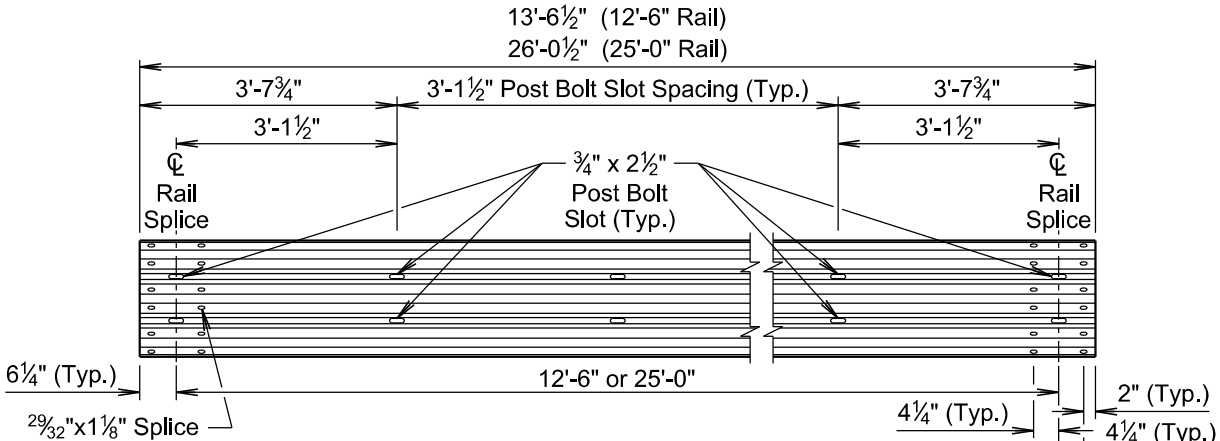

12'-6" OR 25'-0" THRIE BEAM RAIL
(3'-1½" Post Spacing)

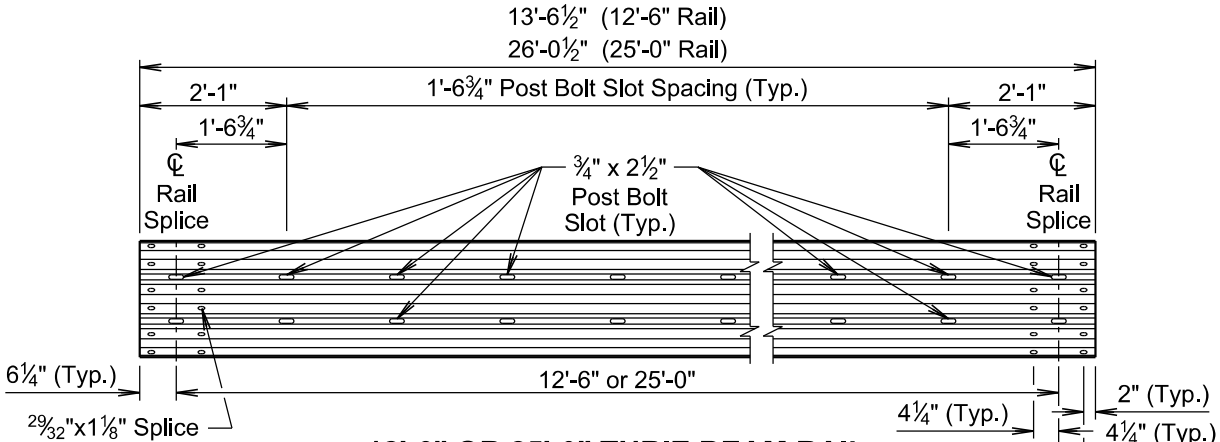

12'-6" OR 25'-0" THRIE BEAM RAIL
(1'-6¾" Post Spacing)

September 14, 2019

Published Date: 2nd Qtr. 2021	SDDOT	*THRIE BEAM GUARDRAIL*	*PLATE NUMBER* 630.01
			Sheet 4 of 5

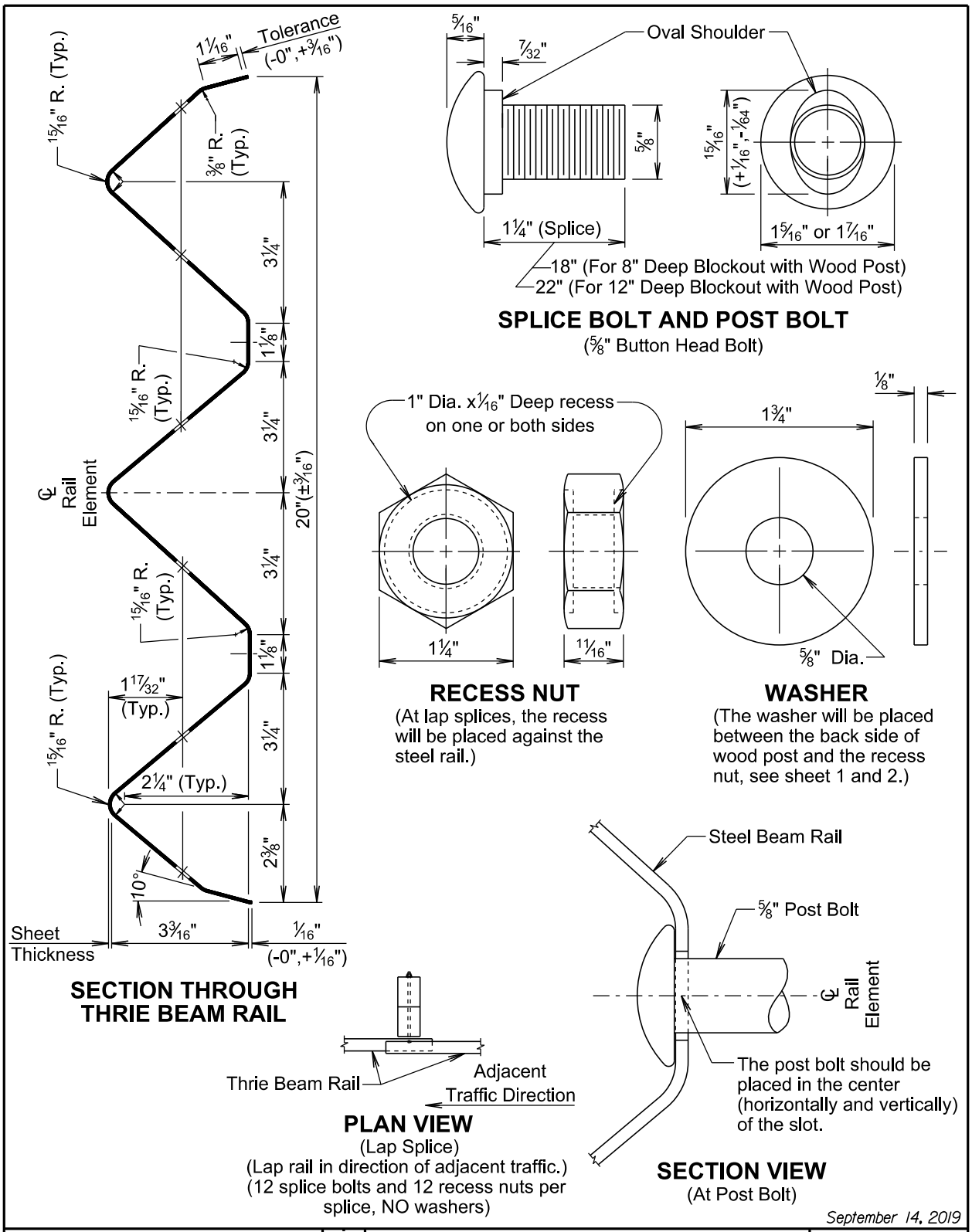

September 14, 2019

Published Date: 2nd Qtr. 2021	SDDOT	THRIE BEAM GUARDRAIL	PLATE NUMBER 630.01 Sheet 5 of 5

GUARDRAIL REPAIR

BEADLE, BROOKINGS, BROWN, BUFFALO, CLARK, CODINGTON, DAY, DEUEL, EDMUNDS, FAULK, GRANT, HAMLIN, HAND, HYDE, KINGSBURY, MCPHERSON, MARSHALL, MOODY, ROBERTS, AND SPINK COUNTIES

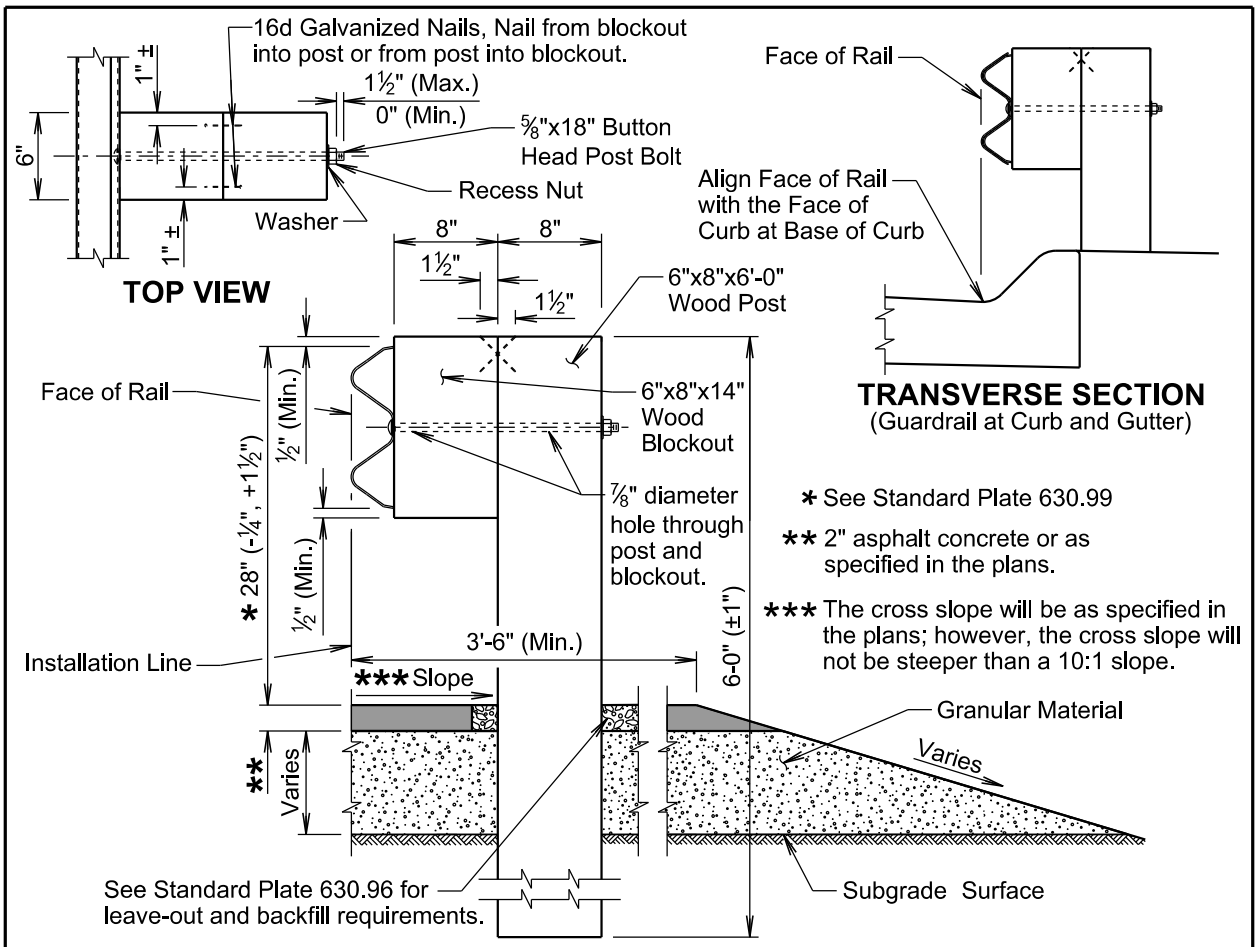

* See Standard Plate 630.99

** 2" asphalt concrete or as specified in the plans.

*** The cross slope will be as specified in the plans; however, the cross slope will not be steeper than a 10:1 slope.

TRANSVERSE SECTION

GENERAL NOTES:

Asphalt concrete will be the same type used elsewhere on the project or will be as specified in the plans. If asphalt concrete is not specified in the plans, the asphalt concrete will conform to the Specifications for "Asphalt Concrete Composite".

Granular material will be the same type used elsewhere on the project or will be as specified in the plans. If granular material type is not specified in the plans, the material will conform to the Specifications for "Base Course". The granular material will be placed the same thickness as the mainline surfacing or as specified in the plans.

Topsoil is not shown in the transverse section drawing.

All W beam rail will be Type 1 and Class A (12 Ga.) unless specified otherwise in the plans.

W beam rail section lengths may be 12'-6" and/or 25'-0". The combination of section lengths used will be compatible with the total length of rail per site as shown in the plans.

Slots in the rails will be provided as specified in the plans and by the manufacturer. A drilled hole through the rail is not allowed as a replacement for a slot. If the Contractor must create a slot, a cutting torch or plasma cutter is not allowed. The slot edges will be smooth and free of burrs or notches.

The top of post and top of block will have a true square cut. The top of block will be a maximum of ± ½ inch from the top of the post.

September 14, 2019

Published Date: 2nd Qtr. 2021	SDDOT	*W BEAM GUARDRAIL*	PLATE NUMBER 630.10
			Sheet 1 of 5

GUARDRAIL REPAIR

BEADLE, BROOKINGS, BROWN, BUFFALO, CLARK, CODINGTON, DAY, DEUEL, EDMUNDS, FAULK, GRANT, HAMLIN, HAND, HYDE, KINGSBURY, MCPHERSON, MARSHALL, MOODY, ROBERTS, AND SPINK COUNTIES

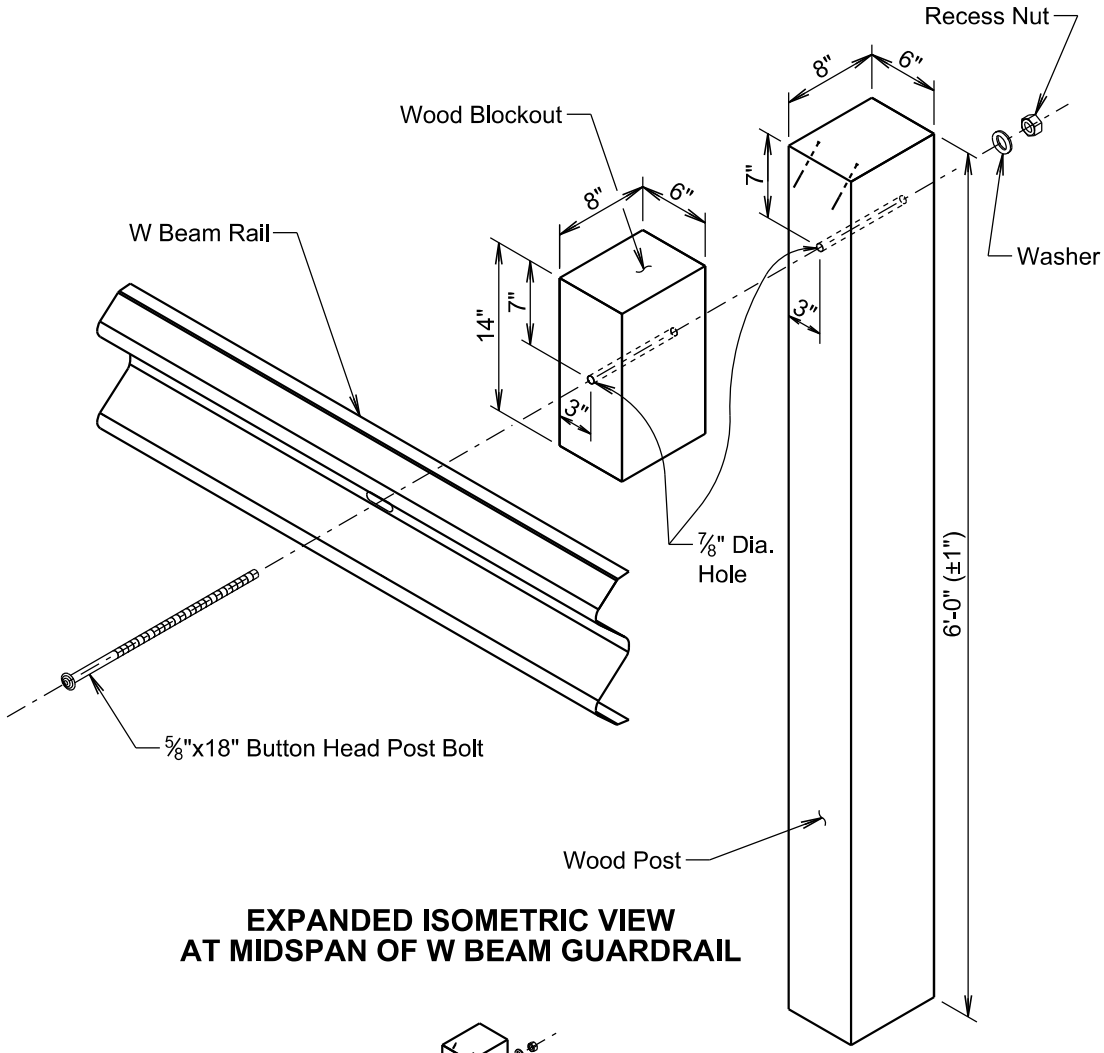

EXPANDED ISOMETRIC VIEW AT MIDSPAN OF W BEAM GUARDRAIL

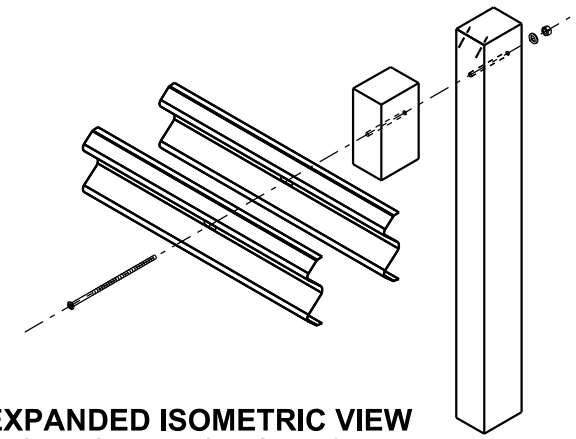

EXPANDED ISOMETRIC VIEW OF DOUBLE (NESTED) W BEAM GUARDRAIL AT MIDSPAN

(For Information Only, Not to Scale)

September 14, 2019

Published Date: 2nd Qtr. 2021	SDDOT	W BEAM GUARDRAIL	PLATE NUMBER 630.10 Sheet 2 of 5

GUARDRAIL REPAIR

BEADLE, BROOKINGS, BROWN, BUFFALO, CLARK, CODINGTON, DAY, DEUEL, EDMUNDS, FAULK, GRANT, HAMLIN, HAND, HYDE, KINGSBURY, MCPHERSON, MARSHALL, MOODY, ROBERTS, AND SPINK COUNTIES

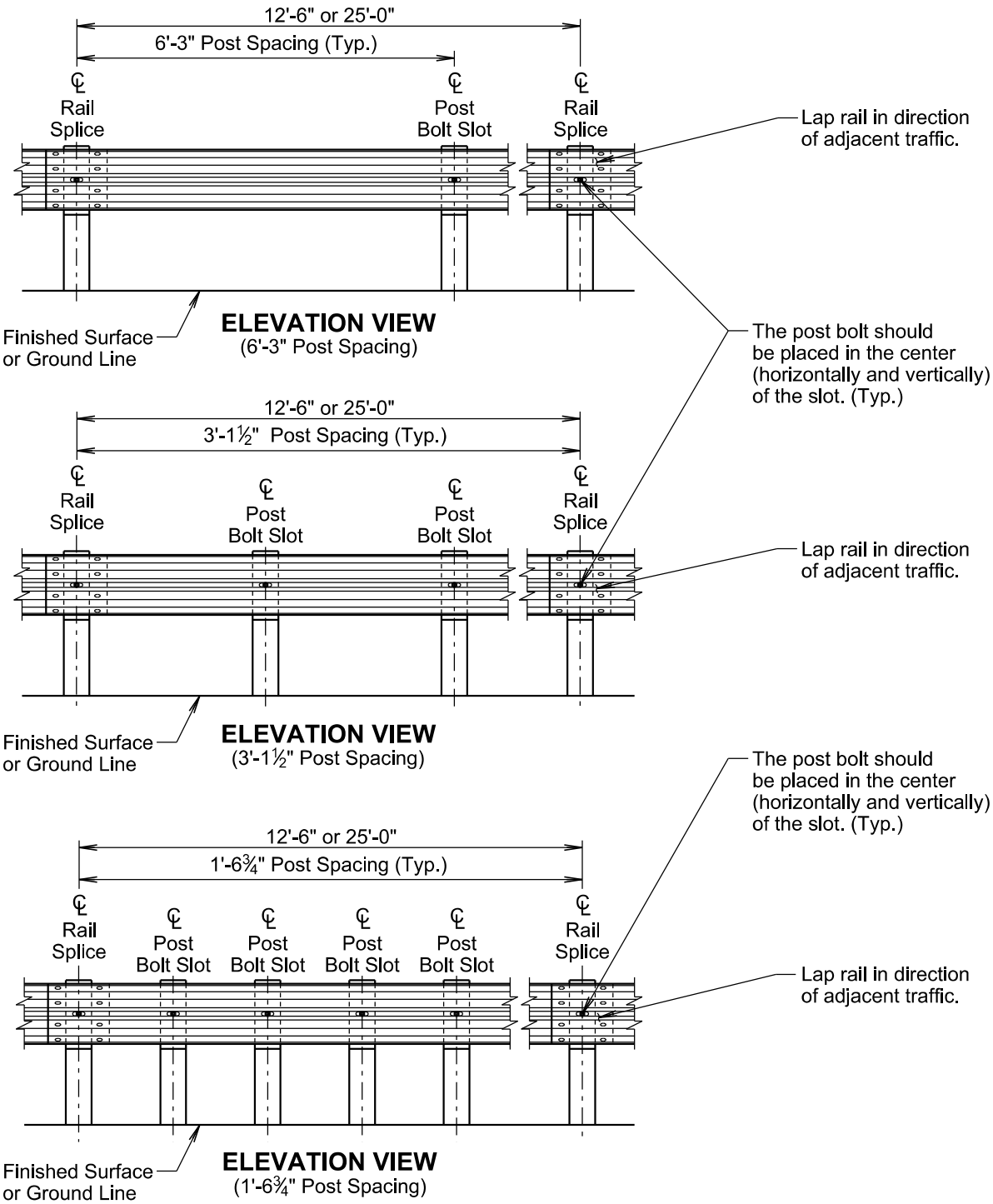

September 14, 2019

Published Date: 2nd Qtr. 2021	SDDOT	W BEAM GUARDRAIL	PLATE NUMBER 630.10 Sheet 3 of 5

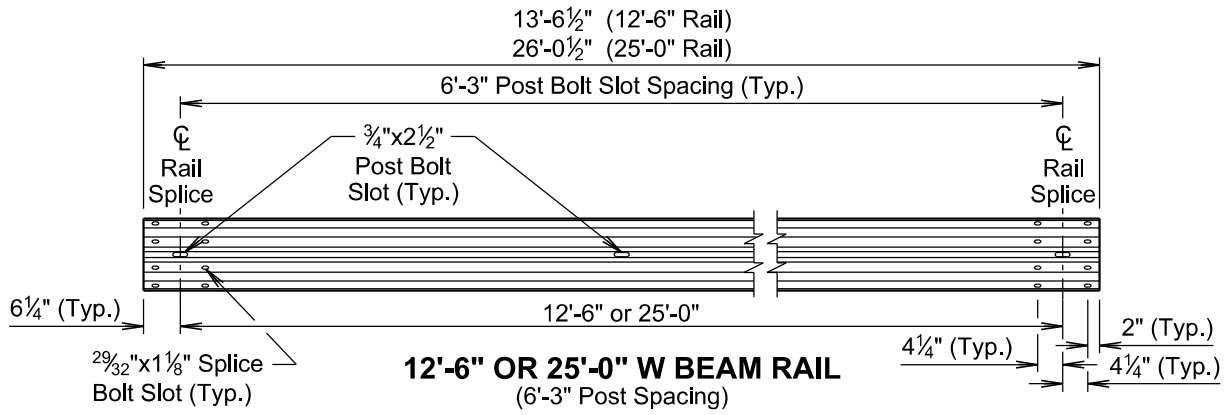

12'-6" OR 25'-0" W BEAM RAIL
(6'-3" Post Spacing)

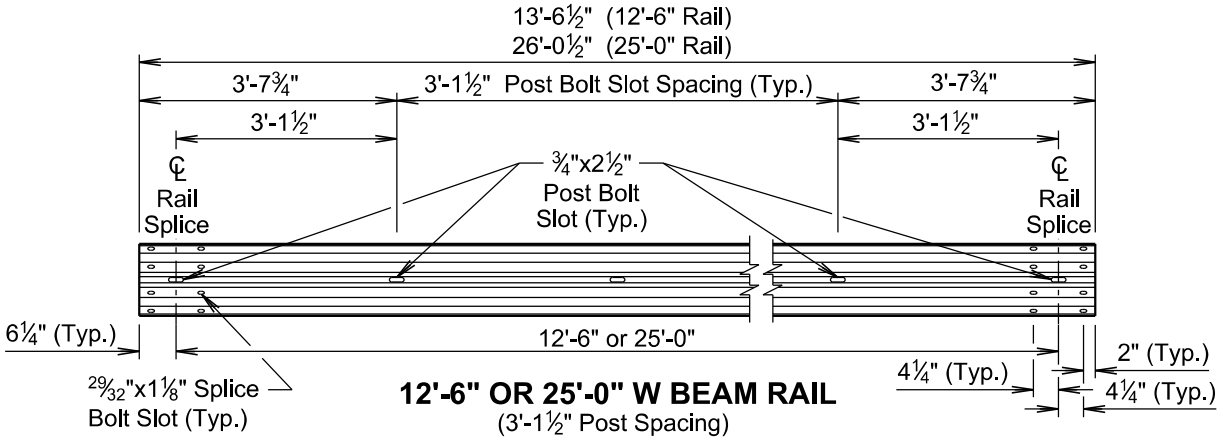

12'-6" OR 25'-0" W BEAM RAIL
(3'-1½" Post Spacing)

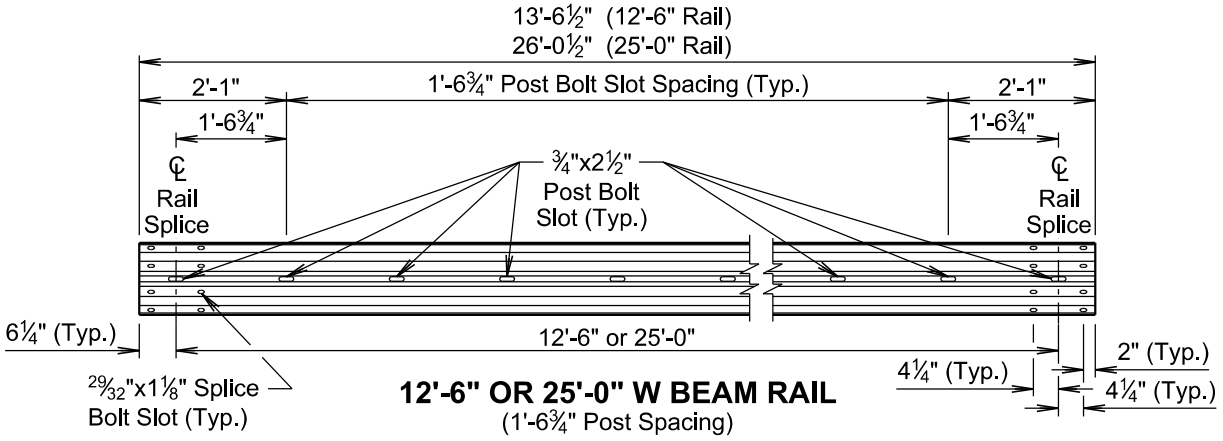

12'-6" OR 25'-0" W BEAM RAIL
(1'-6¾" Post Spacing)

September 14, 2019

Published Date: 2nd Qtr. 2021	SDDOT	W BEAM GUARDRAIL	PLATE NUMBER 630.10 Sheet 4 of 5

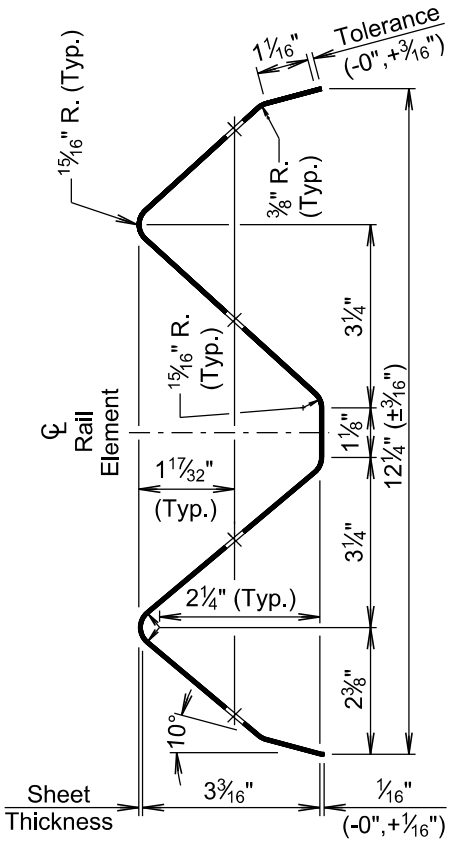

SECTION THROUGH W BEAM RAIL

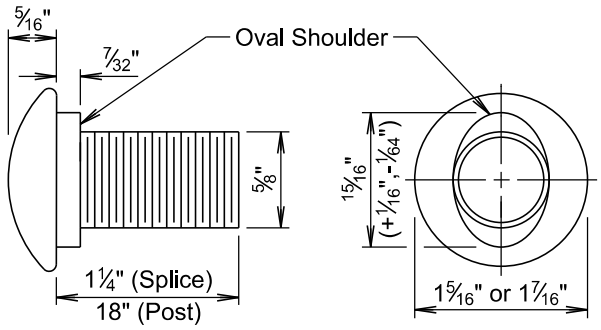

SPLICE BOLT AND POST BOLT

(5/8" Button Head Bolt)

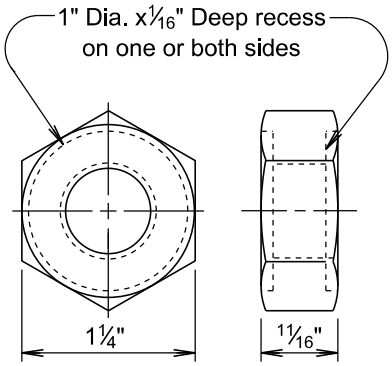

RECESS NUT

(At lap splices, the recess will be placed against the steel rail.)

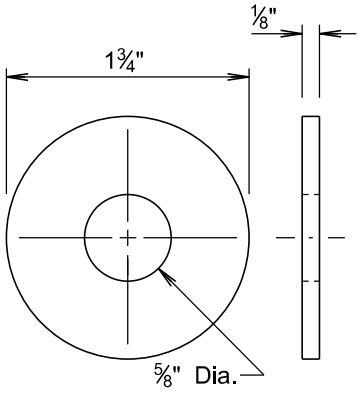

WASHER

(The washer will be placed between the back side of wood post and the recess nut, see sheet 1 and 2.)

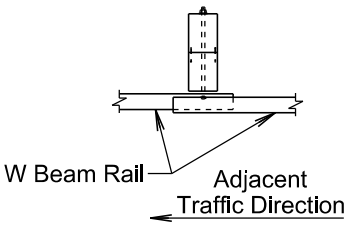

PLAN VIEW

(Lap Splice)
(Lap rail in direction of adjacent traffic.)
(8 splice bolts and 8 recess nuts per splice, NO washers)

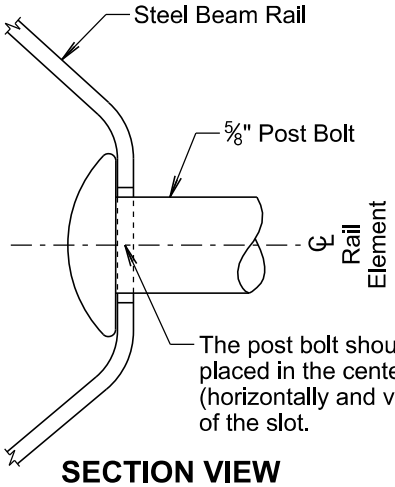

SECTION VIEW

(At Post Bolt)

September 14, 2019

Published Date: 2nd Qtr. 2021	SDDOT	W BEAM GUARDRAIL	PLATE NUMBER 630.10 Sheet 5 of 5

TYPE AND DETAILS OF MGS						
Type of MGS	W Beam Rail Single or Double (Nested)	Blockout Size	Blockout Material	Post Size	Post Material	Post Spacing
1	Single	6"x12"x14"	Wood	6"x8"x6'-0"	Wood	6'-3"
1C	Single	6"x12"x14"	Wood	6"x8"x7'-6"	Wood	6'-3"
2	Single	6"x12"x14"	Wood	6"x8"x6'-0"	Wood	3'-1½"
3	Single	6"x12"x14"	Wood	6"x8"x6'-0"	Wood	1'-6¾"
4	Double	6"x12"x14"	Wood	6"x8"x6'-0"	Wood	6'-3"

STANDARD PLATE REFERENCE	
Type of MGS	See Standard Plate(s)
1	630.20, 630.22
1C	630.20, 630.25
2	630.20
3	630.20
4	630.20

GENERAL NOTES:

Asphalt concrete will be the same type used elsewhere on the project or will be as specified in the plans. If asphalt concrete is not specified in the plans, the asphalt concrete will conform to the Specifications for "Asphalt Concrete Composite".

Granular material will be the same type used elsewhere on the project or will be as specified in the plans. If granular material type is not specified in the plans, the material will conform to the Specifications for "Base Course". The granular material will be placed the same thickness as the mainline surfacing or as specified in the plans.

Topsoil is not shown in the transverse section drawing on sheet 2 of 6.

All W beam rail will be Type 1 and Class A (12 Ga.) unless specified otherwise in the plans.

W beam rail section lengths may be 12'-6" and/or 25'-0". The combination of section lengths used will be compatible with the total length of rail per site as shown in the plans.

Slots in the rails will be provided as specified in the plans and by the manufacturer. A drilled hole through the rail is not allowed as a replacement for a slot. If the Contractor must create a slot, a cutting torch or plasma cutter is not allowed. The slot edges will be smooth and free of burrs or notches.

All costs for constructing the MGS including labor, equipment, and materials including all posts, blockouts, steel beam rail, and hardware will be incidental to the contract unit price per foot for the respective MGS contract item.

September 14, 2019

Published Date: 2nd Qtr. 2021	SDDOT	MIDWEST GUARDRAIL SYSTEM (MGS)	PLATE NUMBER 630.20 Sheet 1 of 6

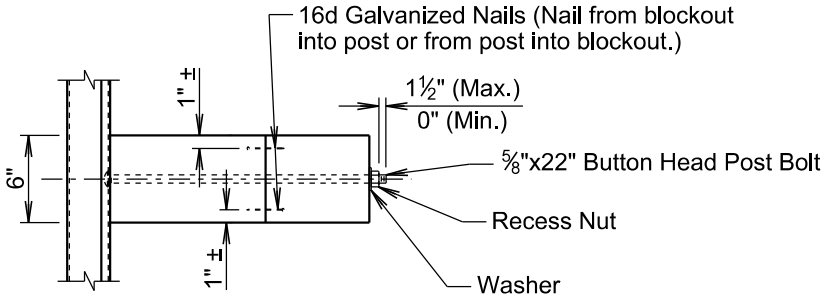

TOP VIEW
(Type 1, 2, or 3 MGS Installation)

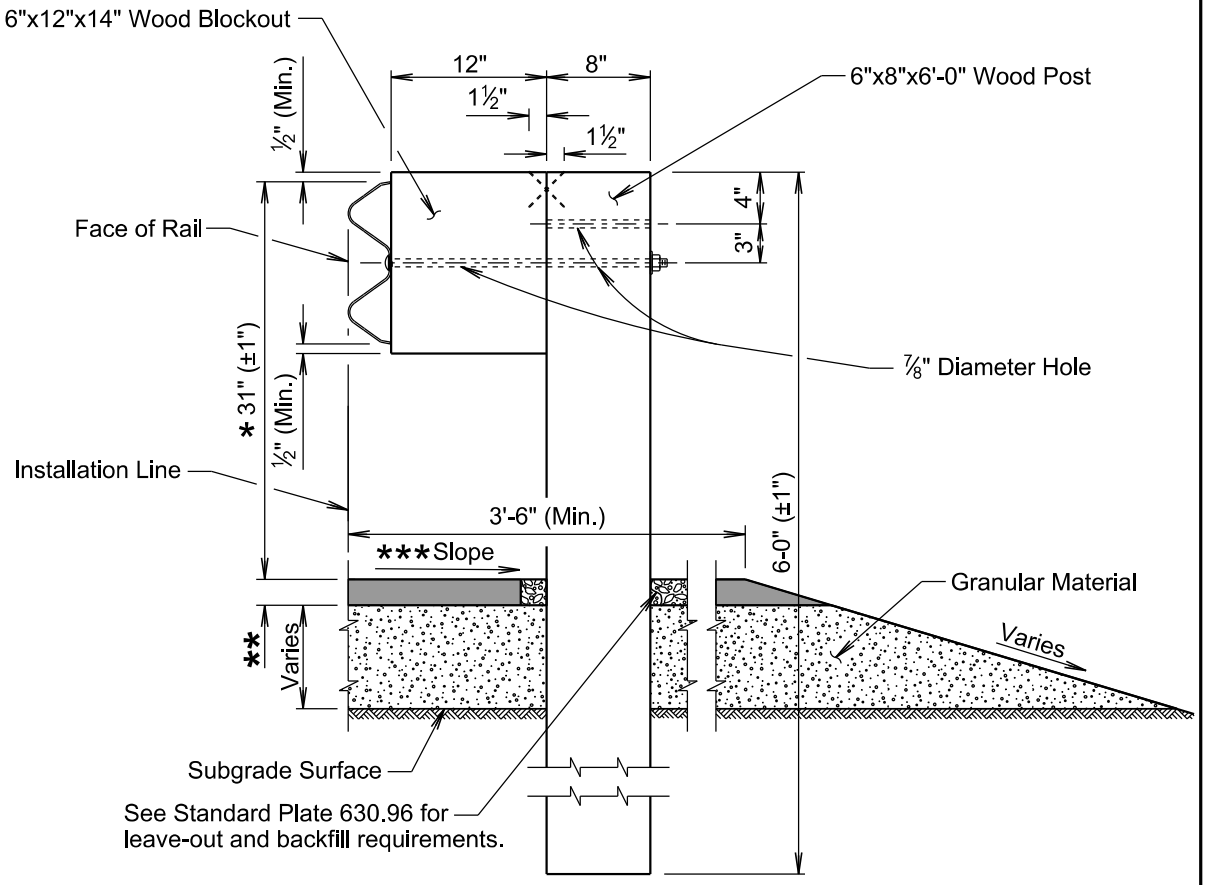

TRANSVERSE SECTION
(Type 1, 2, or 3 MGS Installation)

* See Standard Plate 630.99

** 2" asphalt concrete or as specified in the plans.

*** The cross slope will be as specified in the plans; however, the cross slope will not be steeper than a 10:1 slope.

September 14, 2019

Published Date: 2nd Qtr. 2021	SDDOT	MIDWEST GUARDRAIL SYSTEM (MGS)	PLATE NUMBER 630.20 Sheet 2 of 6

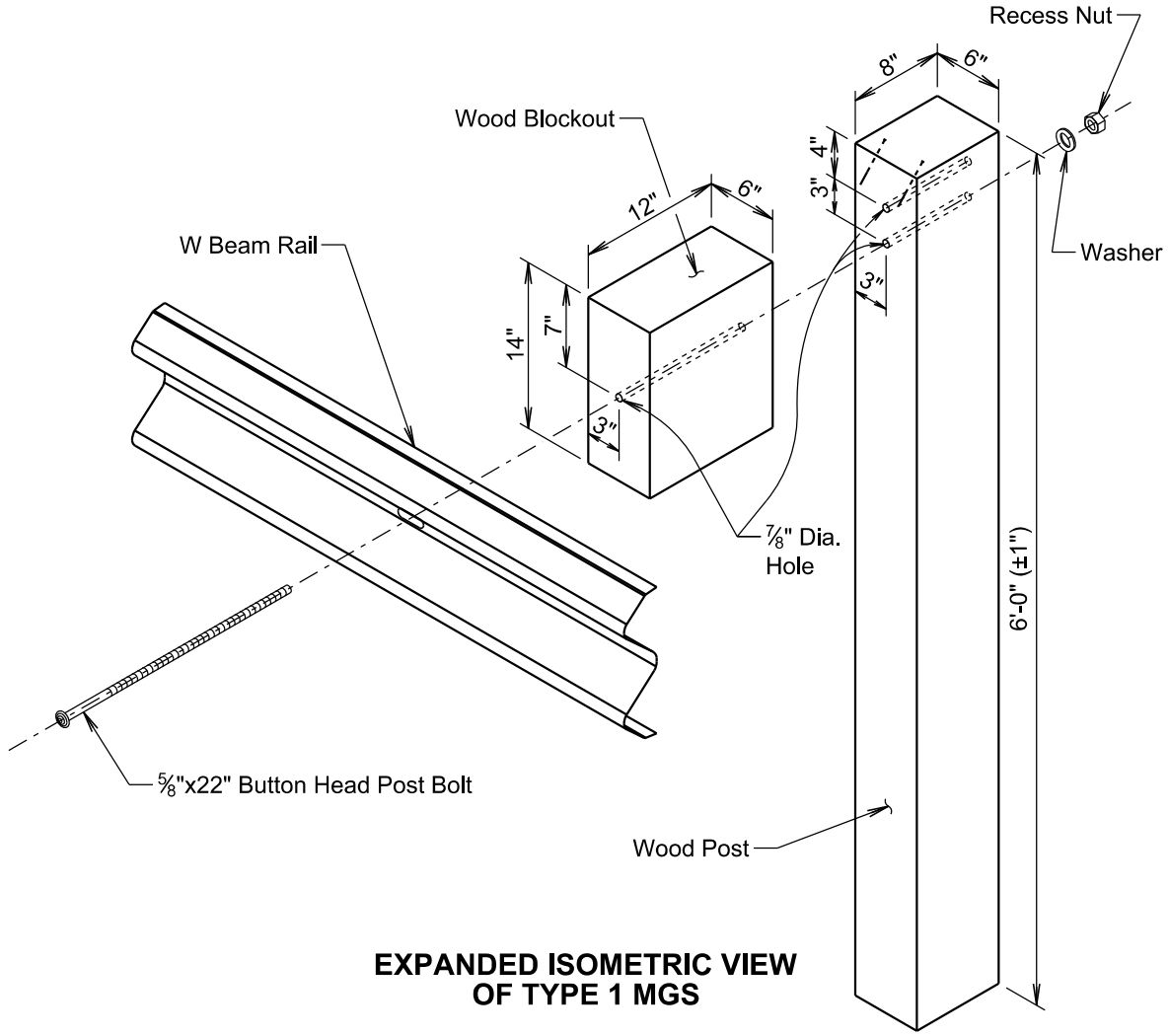

EXPANDED ISOMETRIC VIEW OF TYPE 1 MGS

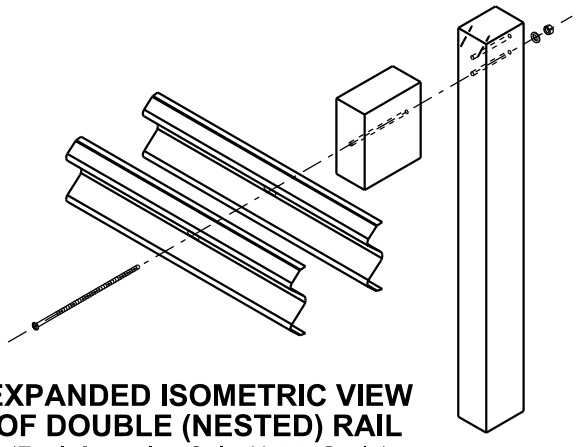

EXPANDED ISOMETRIC VIEW OF DOUBLE (NESTED) RAIL
(For Information Only, Not to Scale)

September 14, 2019

Published Date: 2nd Qtr. 2021	SDDOT	MIDWEST GUARDRAIL SYSTEM (MGS)	PLATE NUMBER 630.20 Sheet 3 of 6

GUARDRAIL REPAIR

BEADLE, BROOKINGS, BROWN, BUFFALO, CLARK, CODINGTON, DAY, DEUEL, EDMUNDS, FAULK, GRANT, HAMLIN, HAND, HYDE, KINGSBURY, MCPHERSON, MARSHALL, MOODY, ROBERTS, AND SPINK COUNTIES

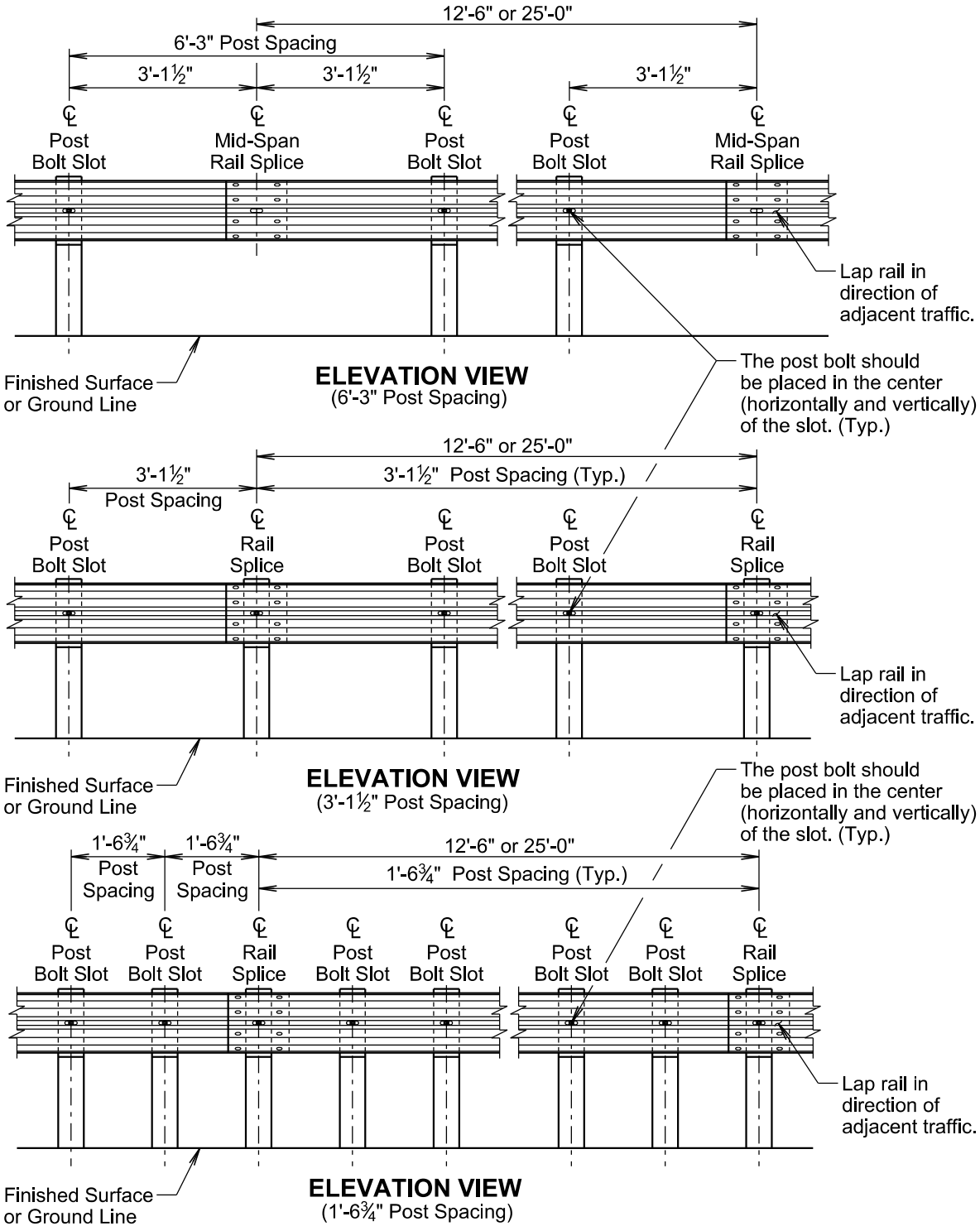

September 14, 2019

Published Date: 2nd Qtr. 2021	SDDOT	MIDWEST GUARDRAIL SYSTEM (MGS)	PLATE NUMBER 630.20 Sheet 4 of 6

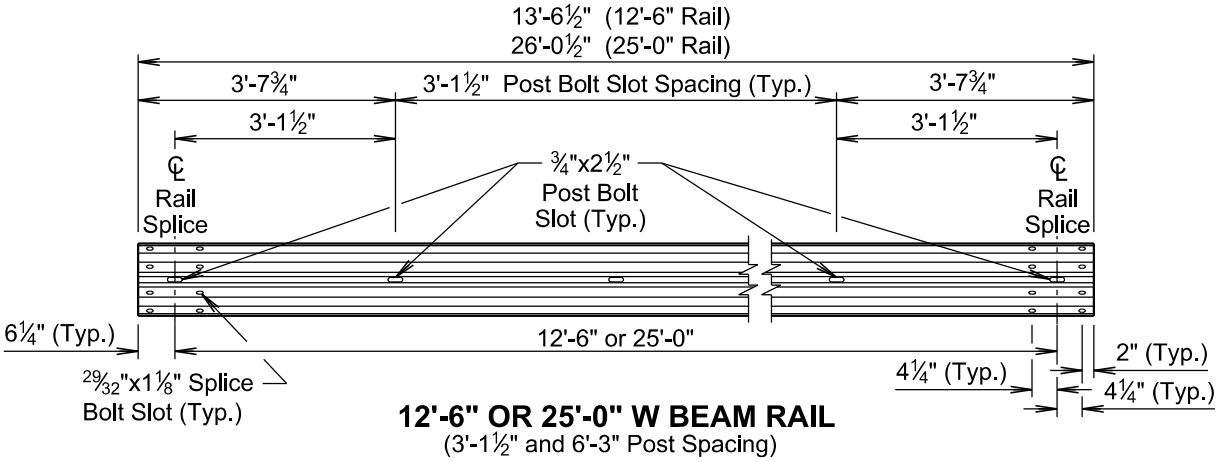

12'-6" OR 25'-0" W BEAM RAIL
(3'-1½" and 6'-3" Post Spacing)

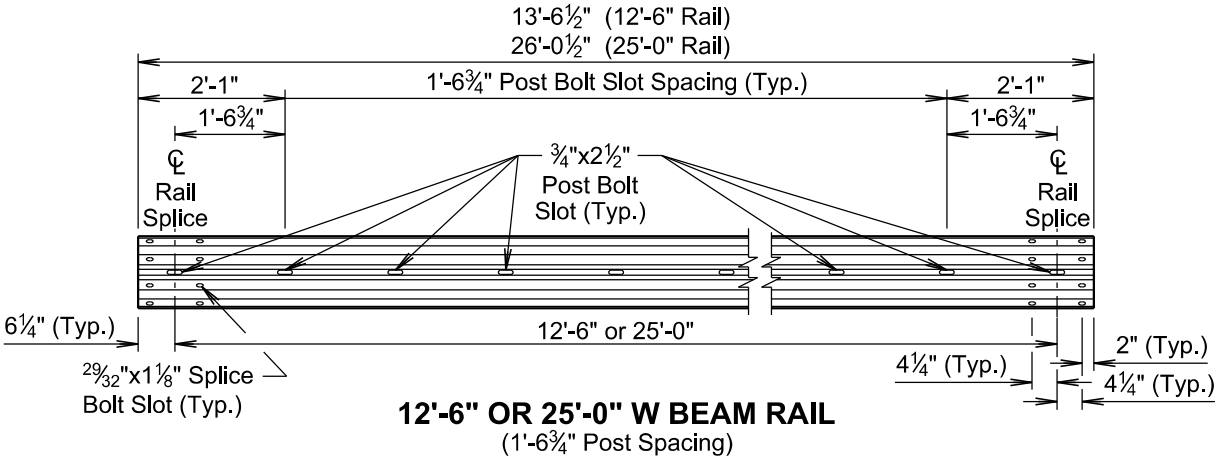

12'-6" OR 25'-0" W BEAM RAIL
(1'-6¾" Post Spacing)

September 14, 2019

Published Date: 2nd Qtr. 2021	SDDOT	MIDWEST GUARDRAIL SYSTEM (MGS)	PLATE NUMBER 630.20 Sheet 5 of 6

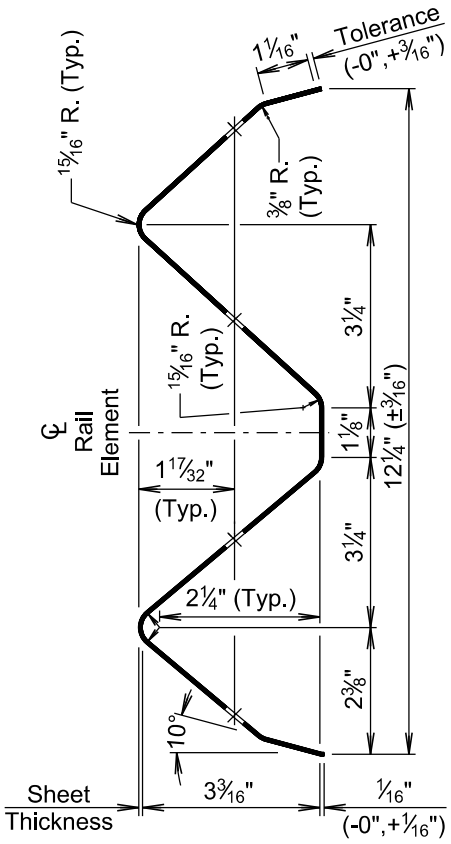

SECTION THROUGH W BEAM RAIL

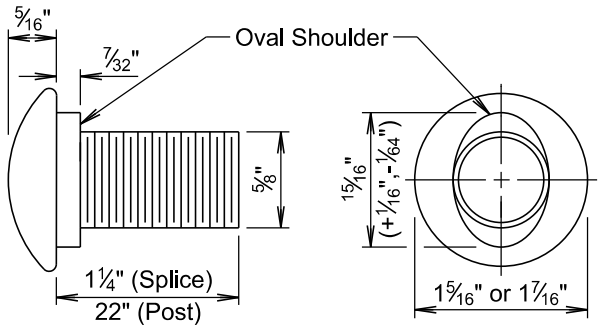

SPLICE BOLT AND POST BOLT
(5/8" Button Head Bolt)

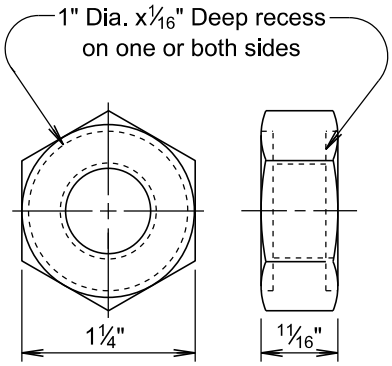

RECESS NUT
(At lap splices, the recess will be placed against the steel rail.)

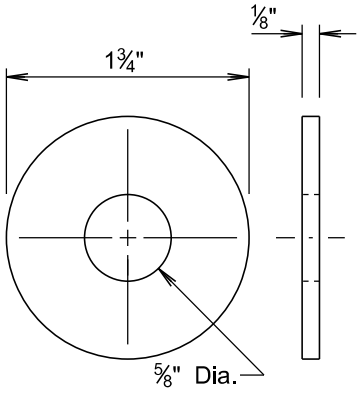

WASHER
(The washer will be placed between the back side of wood post and the recess nut, see sheet 2 and 3.)

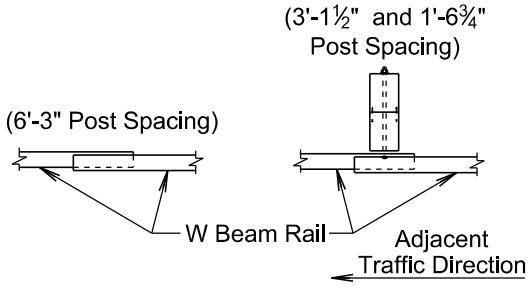

PLAN VIEW
(Lap Splice)
(Lap rail in direction of adjacent traffic.)
(8 splice bolts and 8 recess nuts per splice, NO washers)

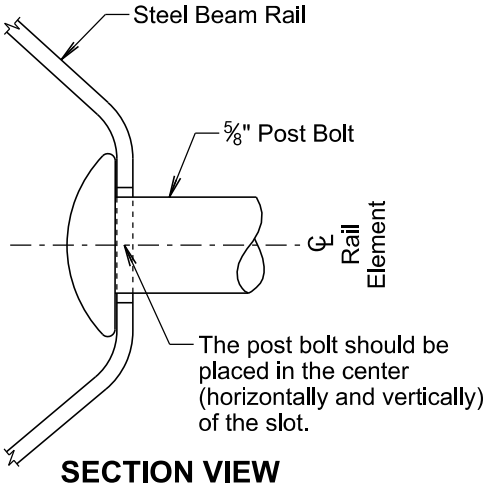

SECTION VIEW
(At Post Bolt)

September 14, 2019

Published Date: 2nd Qtr. 2021	SDDOT	*MIDWEST GUARDRAIL SYSTEM (MGS)*	*PLATE NUMBER* 630.20
			Sheet 6 of 6

GUARDRAIL REPAIR

BEADLE, BROOKINGS, BROWN, BUFFALO, CLARK, CODINGTON, DAY, DEUEL, EDMUNDS, FAULK, GRANT, HAMLIN, HAND, HYDE, KINGSBURY, MCPHERSON, MARSHALL, MOODY, ROBERTS, AND SPINK COUNTIES

CONCRETE CURB AND GUTTER TYPE	DIMENSION *** (in.)
B and BL	8
D	12
F and FL	10
R	11

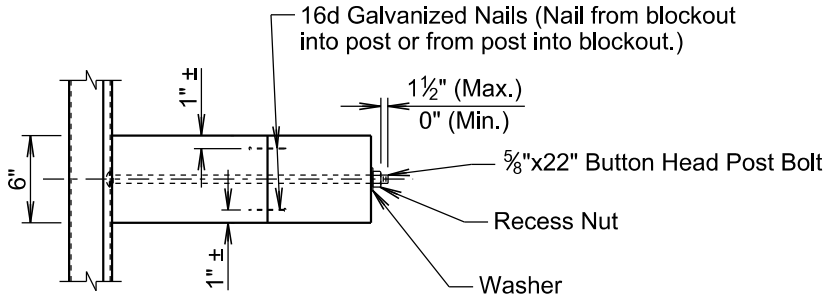

TOP VIEW

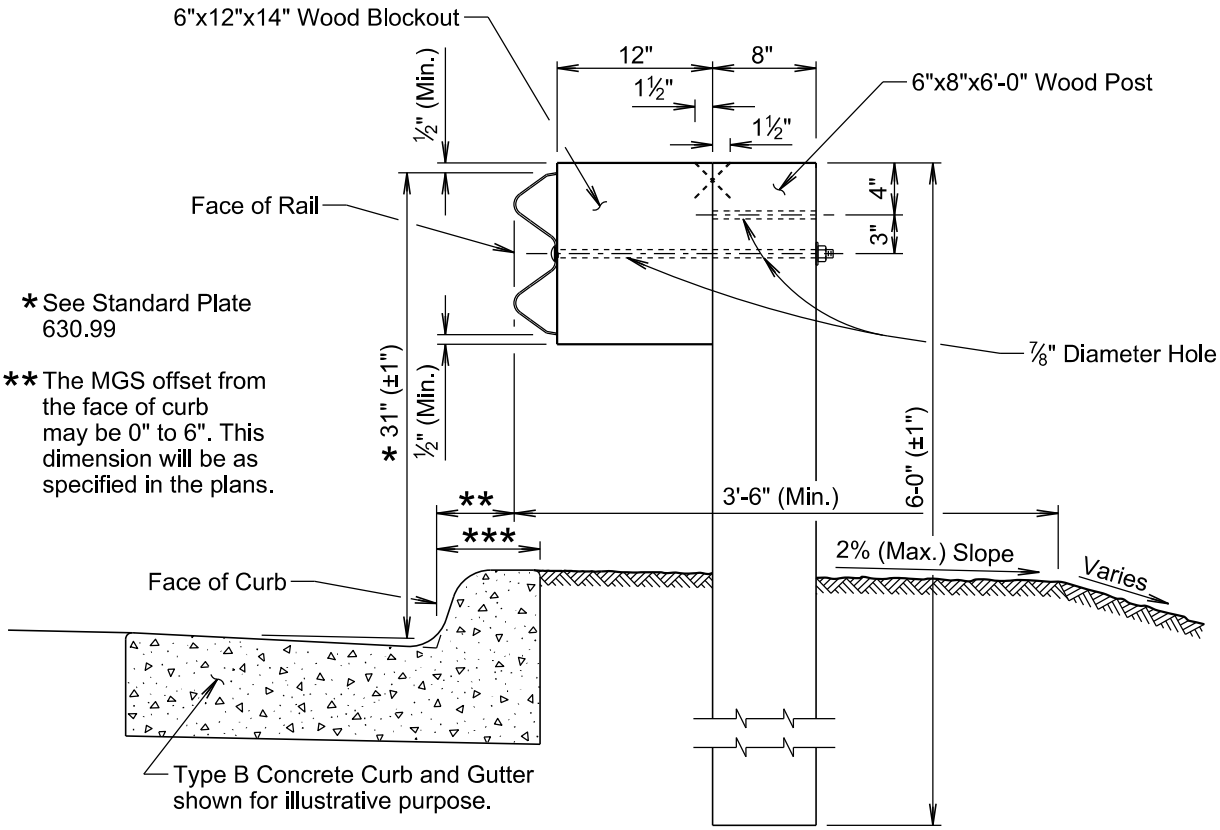

TRANSVERSE SECTION

GENERAL NOTES:

The guardrail on this standard plate is Type 1 MGS. See standard plate 630.20 for specifications regarding Type 1 MGS.

When PCC pavement or asphalt concrete pavement is adjacent to the post, see standard plate 630.96 for leave-out and backfill requirements.

September 14, 2019

Published Date: 2nd Qtr. 2021	SDDOT	MIDWEST GUARDRAIL SYSTEM (MGS) AT CURB AND GUTTER	PLATE NUMBER 630.22 Sheet 1 of 1

GUARDRAIL REPAIR

BEADLE, BROOKINGS, BROWN, BUFFALO, CLARK, CODINGTON, DAY, DEUEL, EDMUNDS, FAULK, GRANT, HAMLIN, HAND, HYDE, KINGSBURY, MCPHERSON, MARSHALL, MOODY, ROBERTS, AND SPINK COUNTIES

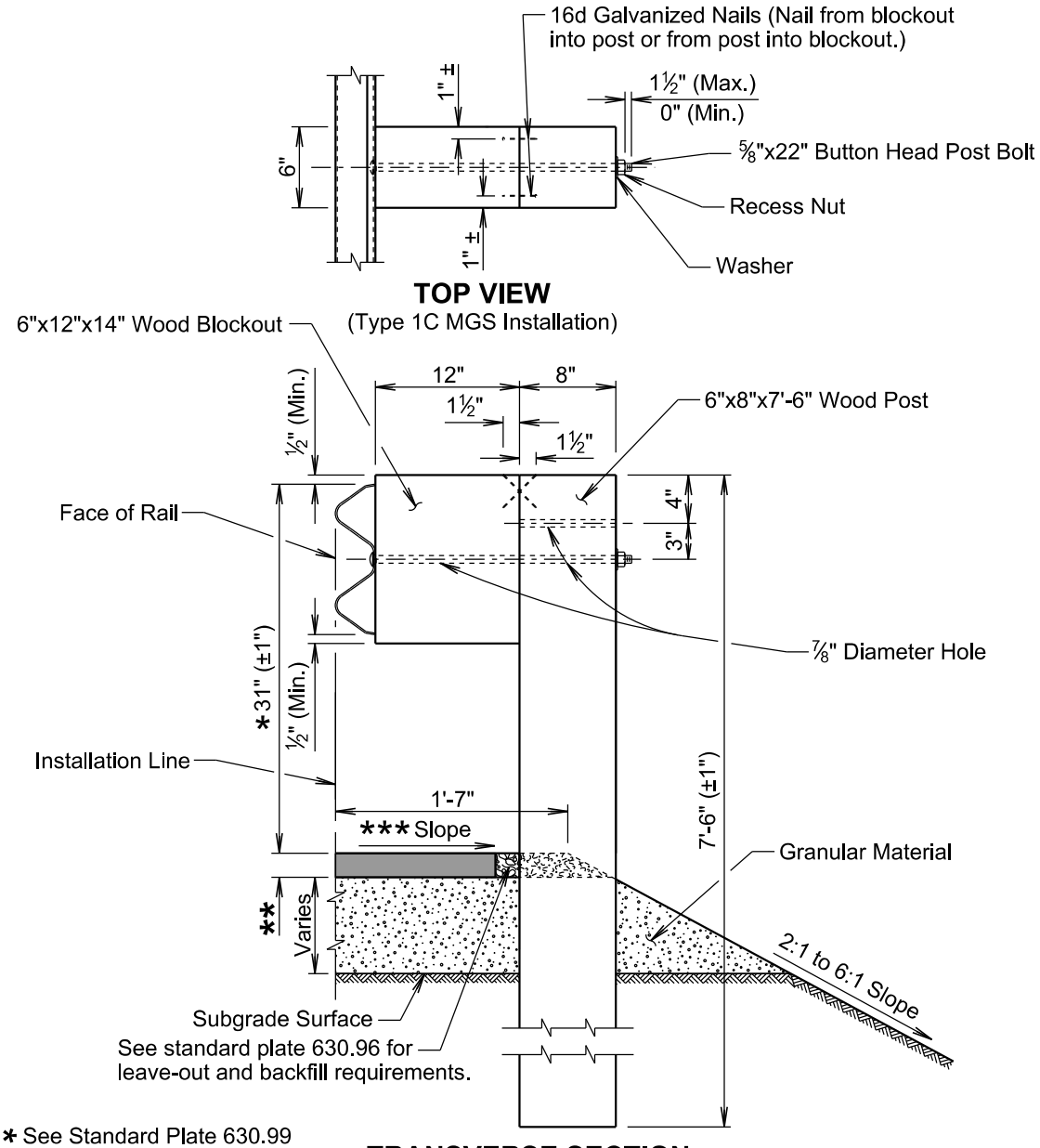

* See Standard Plate 630.99

** 2" asphalt concrete or as specified in the plans.

*** The cross slope will be as specified in the plans; however, the cross slope will not be steeper than a 10:1 slope.

GENERAL NOTES:

The guardrail on this standard plate is Type 1C MGS. See standard plate 630.20 for specifications regarding Type 1C MGS.

Topsoil is not shown in the transverse section drawing.

September 14, 2019

Published Date: 2nd Qtr. 2021	SDDOT	*TYPE 1C MIDWEST GUARDRAIL SYSTEM (MGS) INSTALLATION AT BREAK POINT OF SLOPE*	*PLATE NUMBER* 630.25
			Sheet 1 of 1

GUARDRAIL REPAIR

BEADLE, BROOKINGS, BROWN, BUFFALO, CLARK, CODINGTON, DAY, DEUEL, EDMUNDS, FAULK, GRANT, HAMLIN, HAND, HYDE, KINGSBURY, MCPHERSON, MARSHALL, MOODY, ROBERTS, AND SPINK COUNTIES

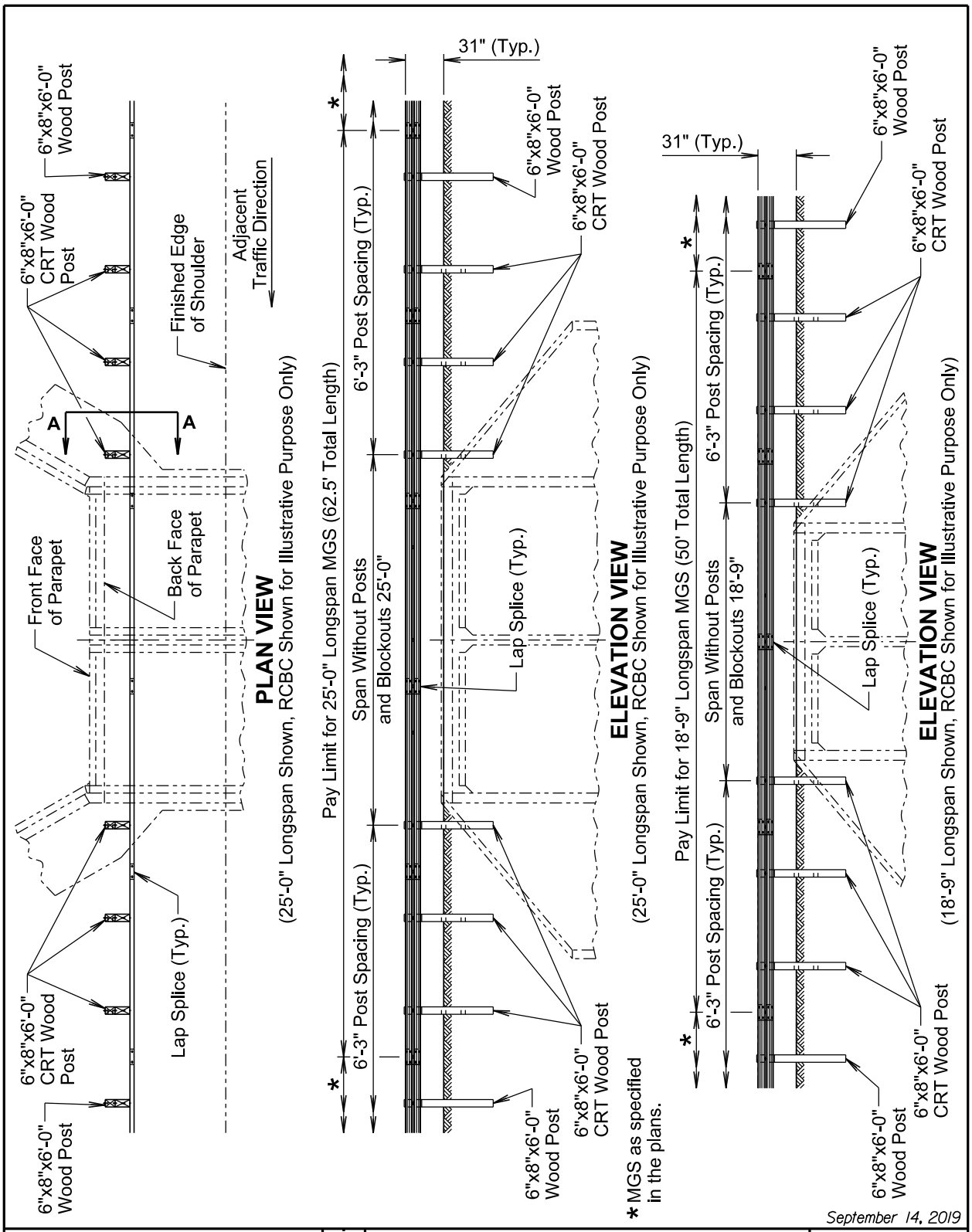

Published Date: 2nd Qtr. 2021	SDDOT	LONGSPAN MIDWEST GUARDRAIL SYSTEM (MGS)	PLATE NUMBER 630.27 Sheet 1 of 3

GUARDRAIL REPAIR

BEADLE, BROOKINGS, BROWN, BUFFALO, CLARK, CODINGTON, DAY, DEUEL, EDMUNDS, FAULK, GRANT, HAMLIN, HAND, HYDE, KINGSBURY, MCPHERSON, MARSHALL, MOODY, ROBERTS, AND SPINK COUNTIES

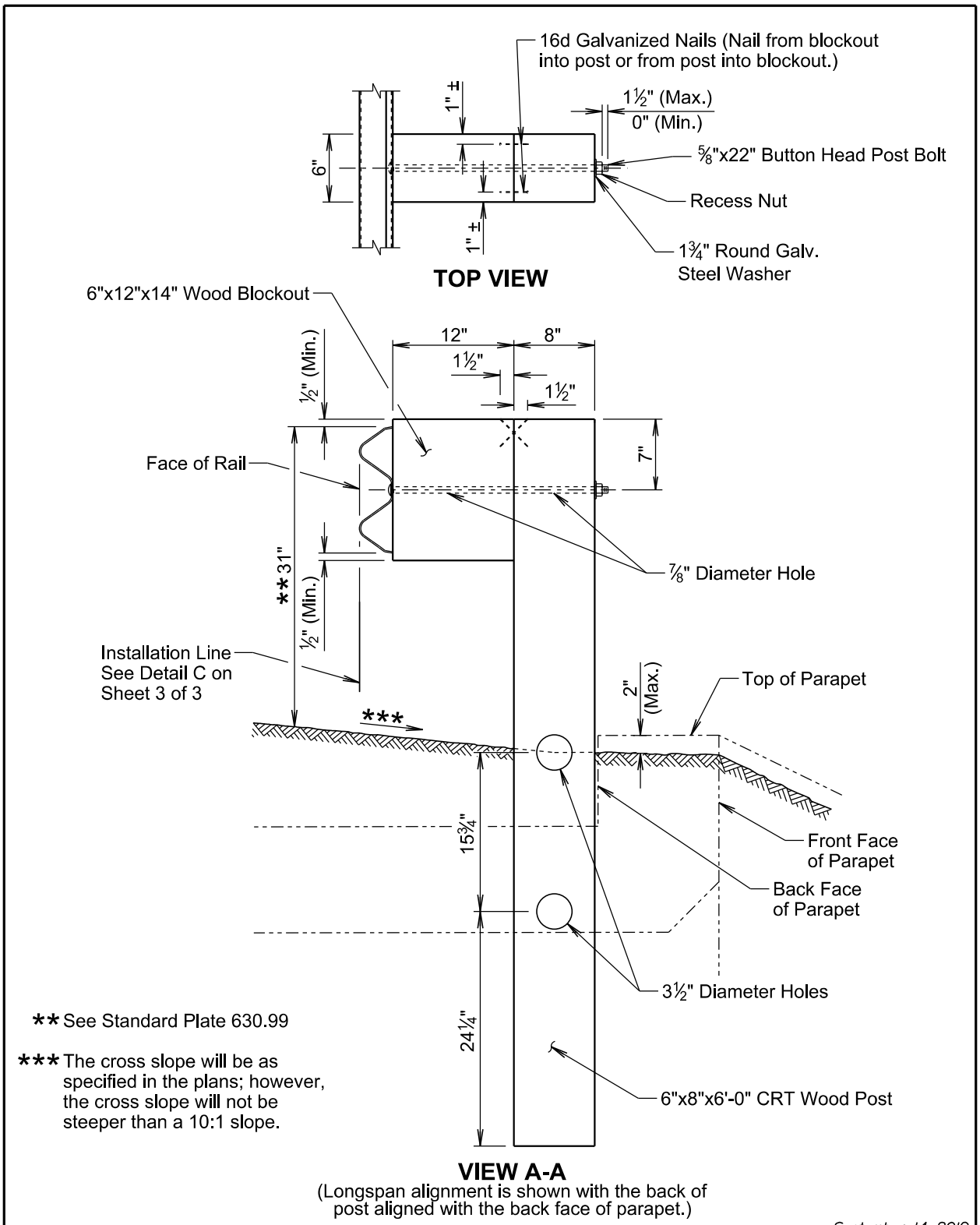

September 14, 2019

Published Date: 2nd Qtr. 2021	SDDOT	LONGSPAN MIDWEST GUARDRAIL SYSTEM (MGS)	PLATE NUMBER 630.27 Sheet 2 of 3

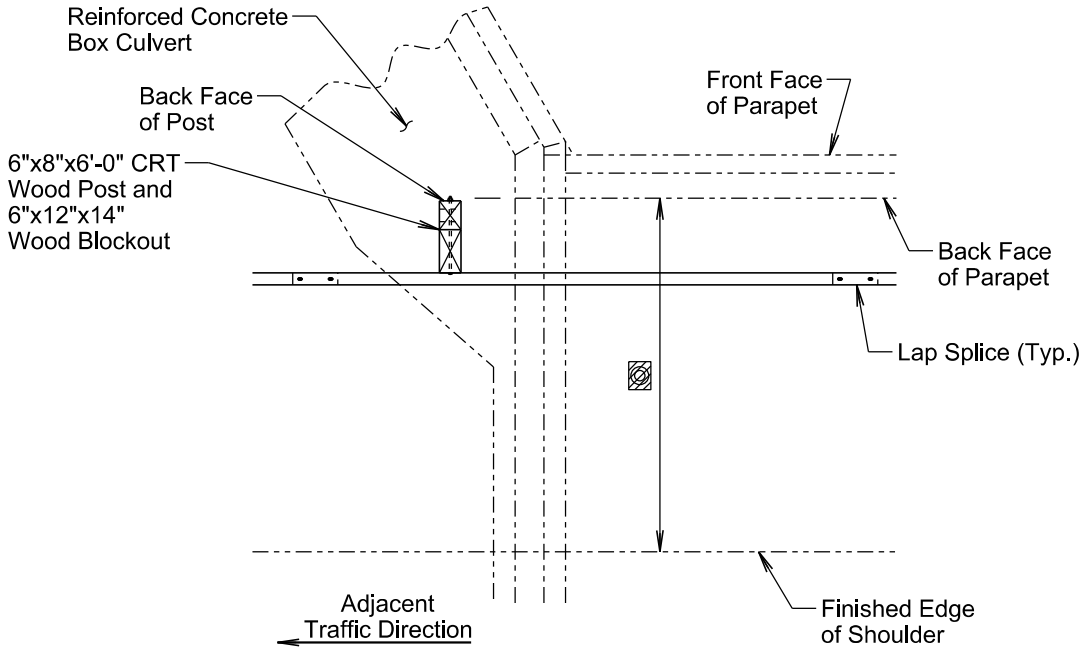

DETAIL C

(Longspan alignment is shown with the back of post aligned with the back face of parapet)

The MGS Longspan alignment will be as specified in the plans; however, the allowable limits of lateral alignment will be such that the back of post will not encroach beyond the back face of the parapet and the front face of the guardrail will not encroach onto the finished shoulder. For other types of culverts that do not have a parapet, the back of post lateral alignment will be a minimum of 1 foot from the opening.

GENERAL NOTES:

See standard plate 630.20 for hardware details and specifications.

The span without posts will be 25' or 18'-9" only, as shown on sheet 1 of 3.

All W beam rail will be Type 1 and Class A (12 Ga.) unless specified otherwise in the plans.

W beam rail section lengths may be 12'-6" and/or 25'-0". The combination of section lengths used will be compatible with the total length of rail per site as shown in the plans.

When PCC pavement or asphalt concrete pavement is adjacent to the post, see standard plate 630.96 for leave-out and backfill requirements.

Slots in the rails will be provided as specified in the plans and by the manufacturer. A drilled hole through the rail is not allowed as a replacement for a slot. If the Contractor must create a slot, a cutting torch or plasma cutter is not allowed. The slot edges will be smooth and free of burrs or notches.

All costs for constructing the Longspan MGS including labor, equipment, and materials including all posts, blockouts, steel beam rail, and hardware will be incidental to the contract unit price per each for the corresponding Longspan MGS contract item.

September 14, 2019

Published Date: 2nd Qtr. 2021	SDDOT	LONGSPAN MIDWEST GUARDRAIL SYSTEM (MGS)	PLATE NUMBER 630.27 Sheet 3 of 3

GUARDRAIL REPAIR

BEADLE, BROOKINGS, BROWN, BUFFALO, CLARK, CODINGTON, DAY, DEUEL, EDMUNDS, FAULK, GRANT, HAMLIN, HAND, HYDE, KINGSBURY, MCPHERSON, MARSHALL, MOODY, ROBERTS, AND SPINK COUNTIES

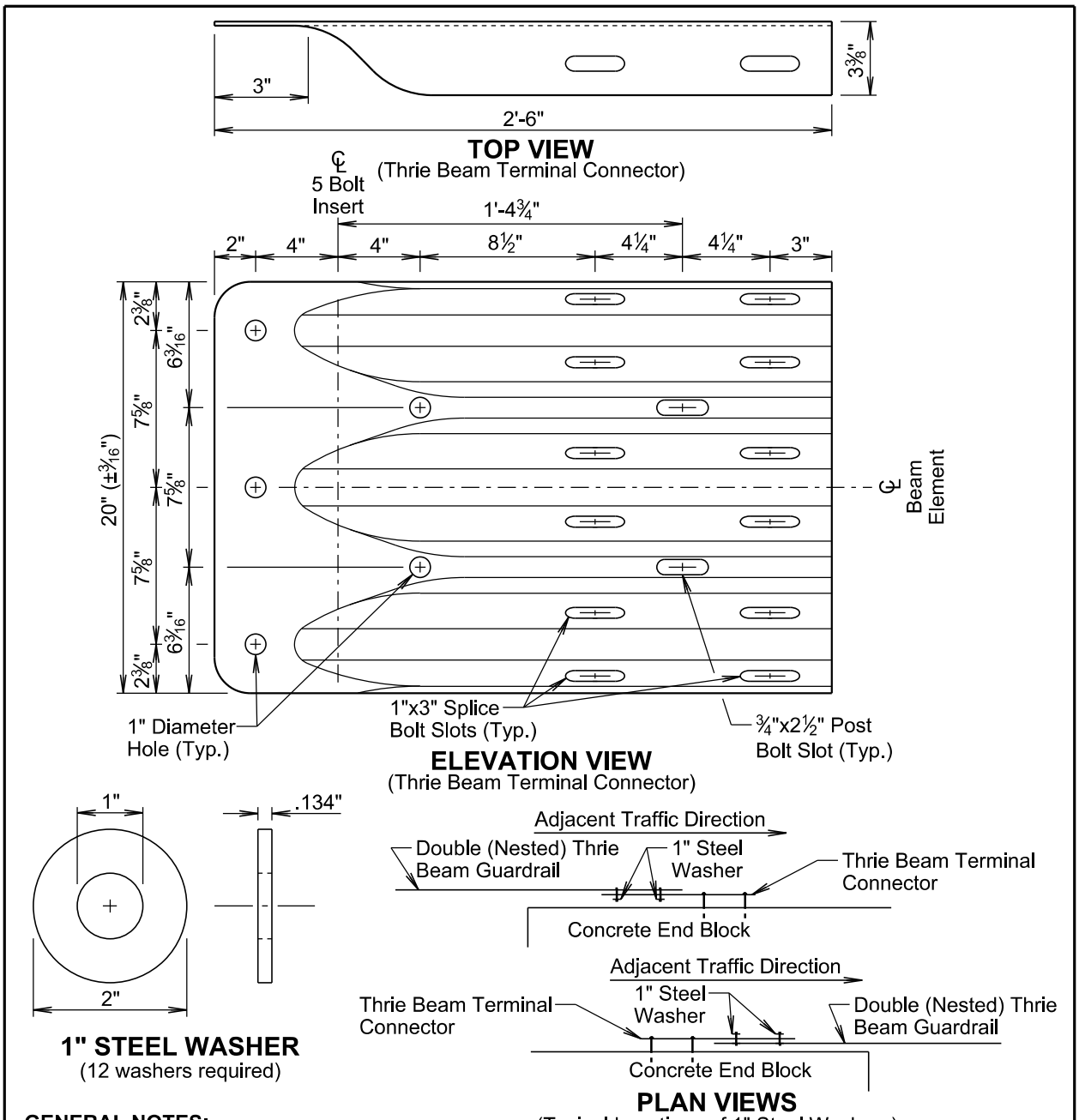

GENERAL NOTES:

Thrie Beam Terminal Connectors will be 10 gauge.

When the thrie beam terminal connector is used to connect the rail to the bridge or concrete end block, 1" steel washers will be used at the lap splice and the washers will be in direct contact with the 3" slots of the thrie beam terminal connector. See the drawings above for the typical locations of the 1" steel washers.

There will be no separate payment for furnishing and installing the thrie beam terminal connector. All costs for furnishing and installing the thrie beam terminal connector will be incidental to the contract unit price of the respective guardrail item it is attached to.

September 14, 2019

Published Date: 2nd Qtr. 2021	SDDOT	*THRIE BEAM TERMINAL CONNECTOR*	*PLATE NUMBER* 630.47
			Sheet 1 of 1

GUARDRAIL REPAIR

BEADLE, BROOKINGS, BROWN, BUFFALO, CLARK, CODINGTON, DAY, DEUEL, EDMUNDS, FAULK, GRANT, HAMLIN, HAND, HYDE, KINGSBURY, MCPHERSON, MARSHALL, MOODY, ROBERTS, AND SPINK COUNTIES

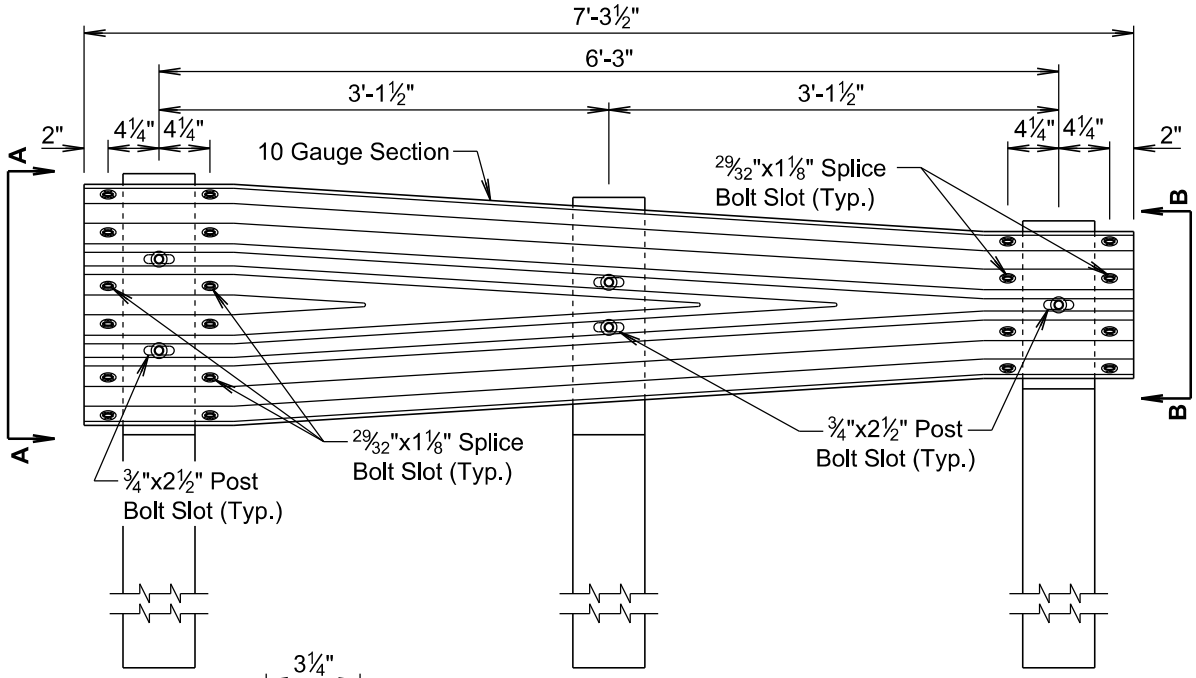

ELEVATION VIEW

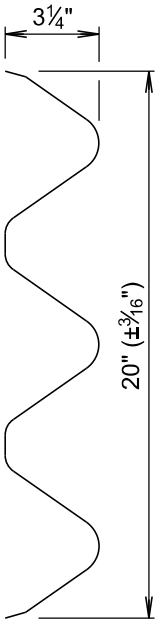

VIEW A-A

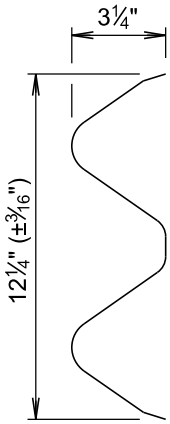

VIEW B-B

GENERAL NOTES:

All costs for furnishing and installing the W beam to thrie beam guardrail transition including labor, equipment, and materials including two posts, two blocks, W beam to thrie beam transition section, and hardware will be incidental to the contract unit price per each for "W Beam to Thrie Beam Guardrail Transition".

September 14, 2019

Published Date: 2nd Qtr. 2021	SDDOT	*W BEAM TO THRIE BEAM GUARDRAIL TRANSITION SECTION*	*PLATE NUMBER* 630.48
			Sheet 1 of 1

GUARDRAIL REPAIR

BEADLE, BROOKINGS, BROWN, BUFFALO, CLARK, CODINGTON, DAY, DEUEL, EDMUNDS, FAULK, GRANT, HAMLIN, HAND, HYDE, KINGSBURY, MCPHERSON, MARSHALL, MOODY, ROBERTS, AND SPINK COUNTIES

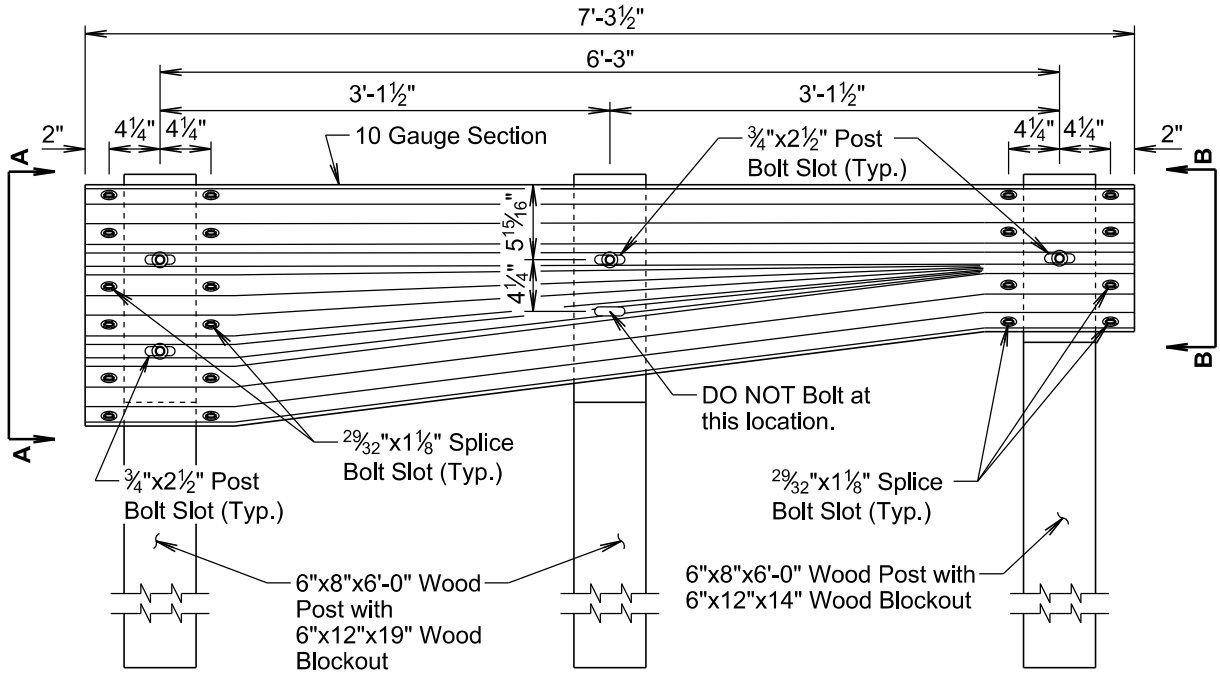

ELEVATION VIEW

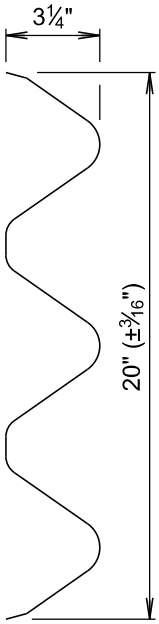

VIEW A-A

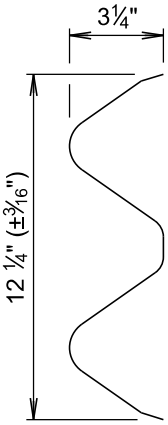

VIEW B-B

GENERAL NOTES:

All costs for furnishing and installing the asymmetrical W beam to thrie beam guardrail transition including labor, equipment, and materials including two posts, two blocks, asymmetrical W beam to thrie beam transition section, and hardware will be incidental to the contract unit price per each for the corresponding guardrail transition contract item.

September 14, 2019

Published Date: 2nd Qtr. 2021	SDDOT	*ASYMMETRICAL W BEAM TO THRIE BEAM GUARDRAIL TRANSITION SECTION*	PLATE NUMBER 630.49
			Sheet 1 of 1

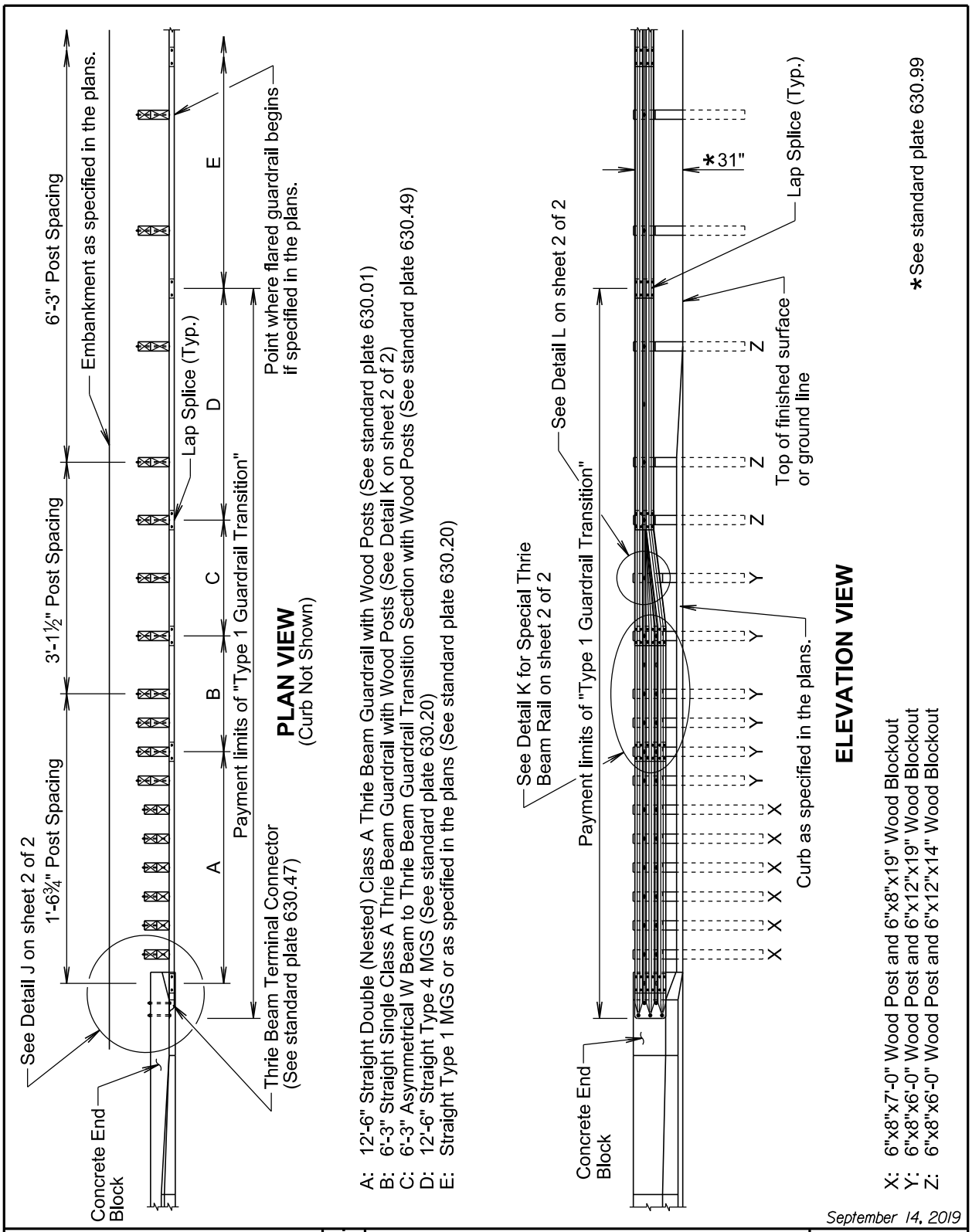

Published Date: 2nd Qtr. 2021	SDDOT	TYPE 1 GUARDRAIL TRANSITION (CONCRETE END BLOCK TO MIDWEST GUARDRAIL SYSTEM (MGS))	PLATE NUMBER 630.50 Sheet 1 of 2

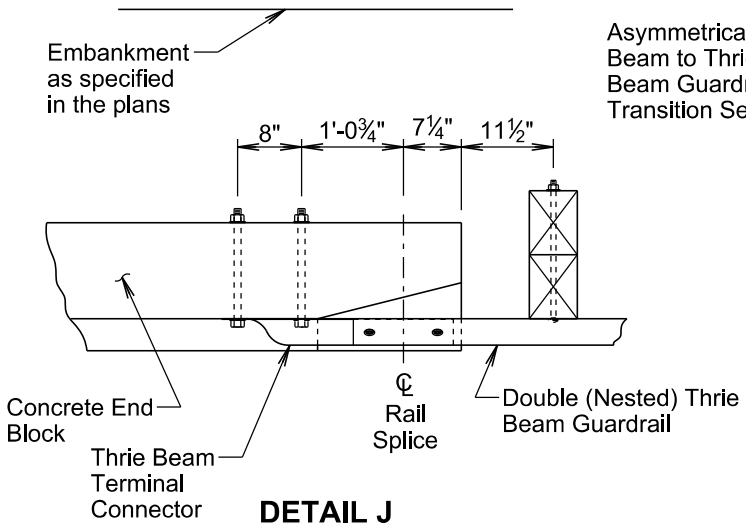

DETAIL J

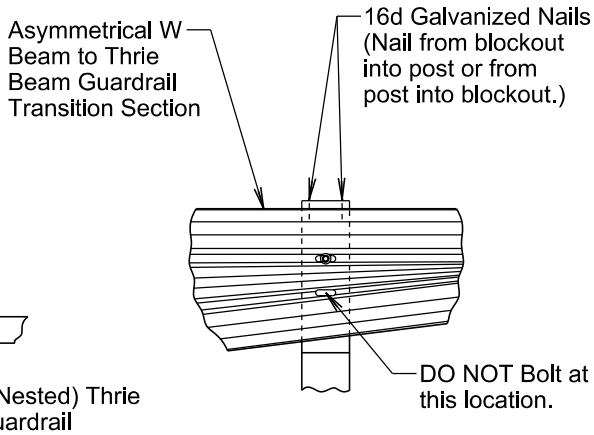

DETAIL L

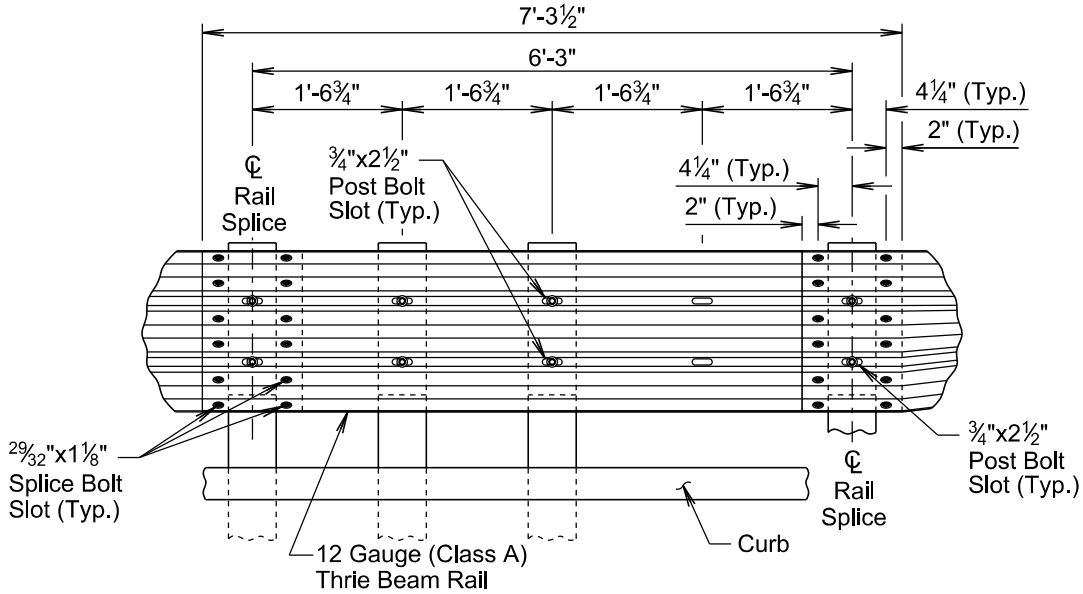

DETAIL K
(Special Thrie Beam Rail)

GENERAL NOTES:

Throughout the type 1 guardrail transition, slots in the rails will be provided as specified in the plans and by the manufacturer. A drilled hole through the rail is not allowed as a replacement for a slot. If the Contractor must create a slot, a cutting torch or plasma cutter is not allowed. The slot edges will be smooth and free of burrs or notches.

All costs for furnishing and installing the type 1 guardrail transition including labor, equipment, and materials which includes all rail sections, posts and blockouts, hardware, and incidentals will be included in the contract unit price per each for "Type 1 Guardrail Transition".

September 14, 2019

Published Date: 2nd Qtr. 2021	SDDOT	*TYPE 1 GUARDRAIL TRANSITION (CONCRETE END BLOCK TO MIDWEST GUARDRAIL SYSTEM (MGS))*	PLATE NUMBER 630.50 Sheet 2 of 2

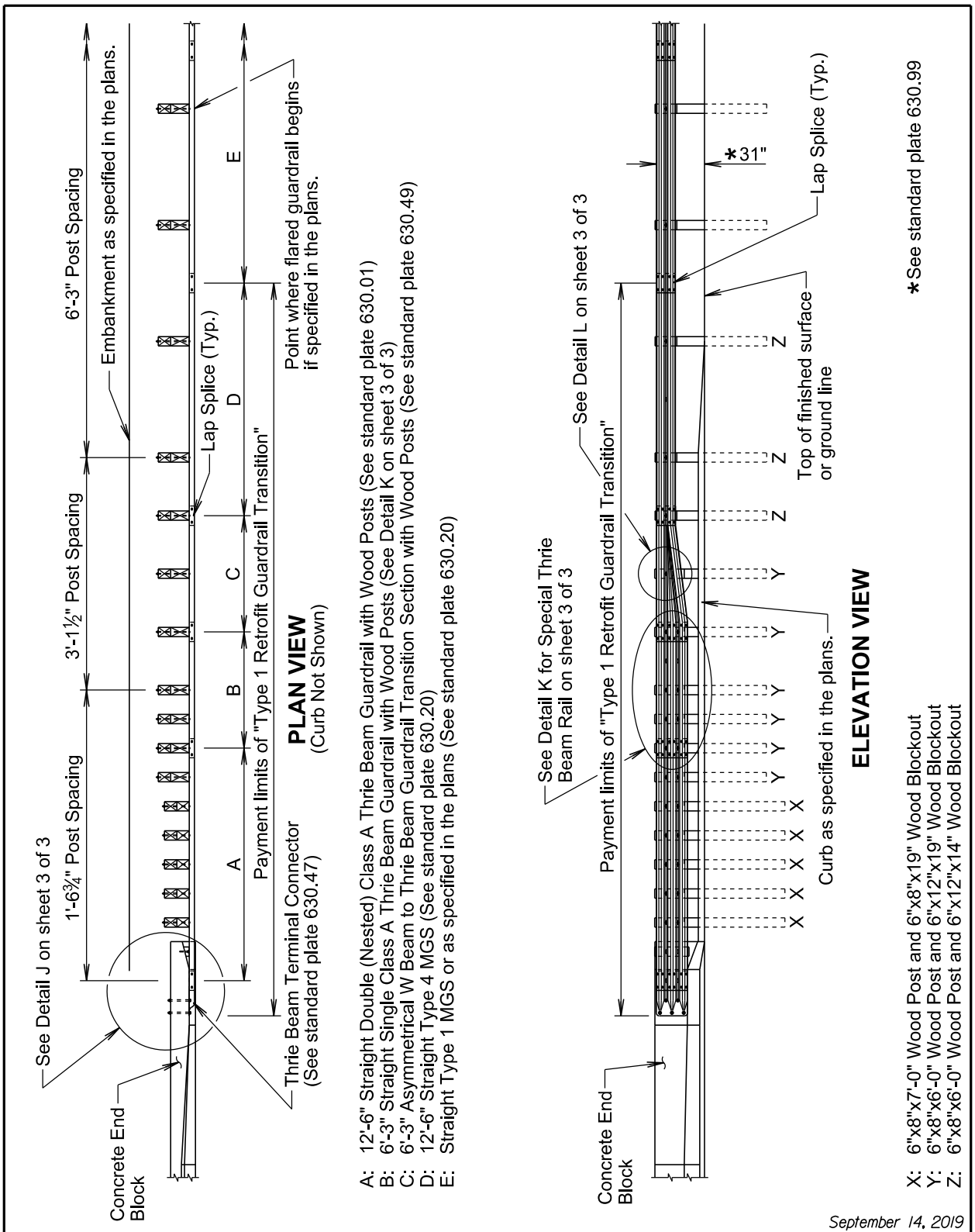

Published Date: 2nd Qtr. 2021	SDDOT	TYPE 1 RETROFIT GUARDRAIL TRANSITION (CONCRETE END BLOCK TO MIDWEST GUARDRAIL SYSTEM (MGS))	PLATE NUMBER 630.51 Sheet 1 of 3

GUARDRAIL REPAIR

BEADLE, BROOKINGS, BROWN, BUFFALO, CLARK, CODINGTON, DAY, DEUEL, EDMUNDS, FAULK, GRANT, HAMLIN, HAND, HYDE, KINGSBURY, MCPHERSON, MARSHALL, MOODY, ROBERTS, AND SPINK COUNTIES

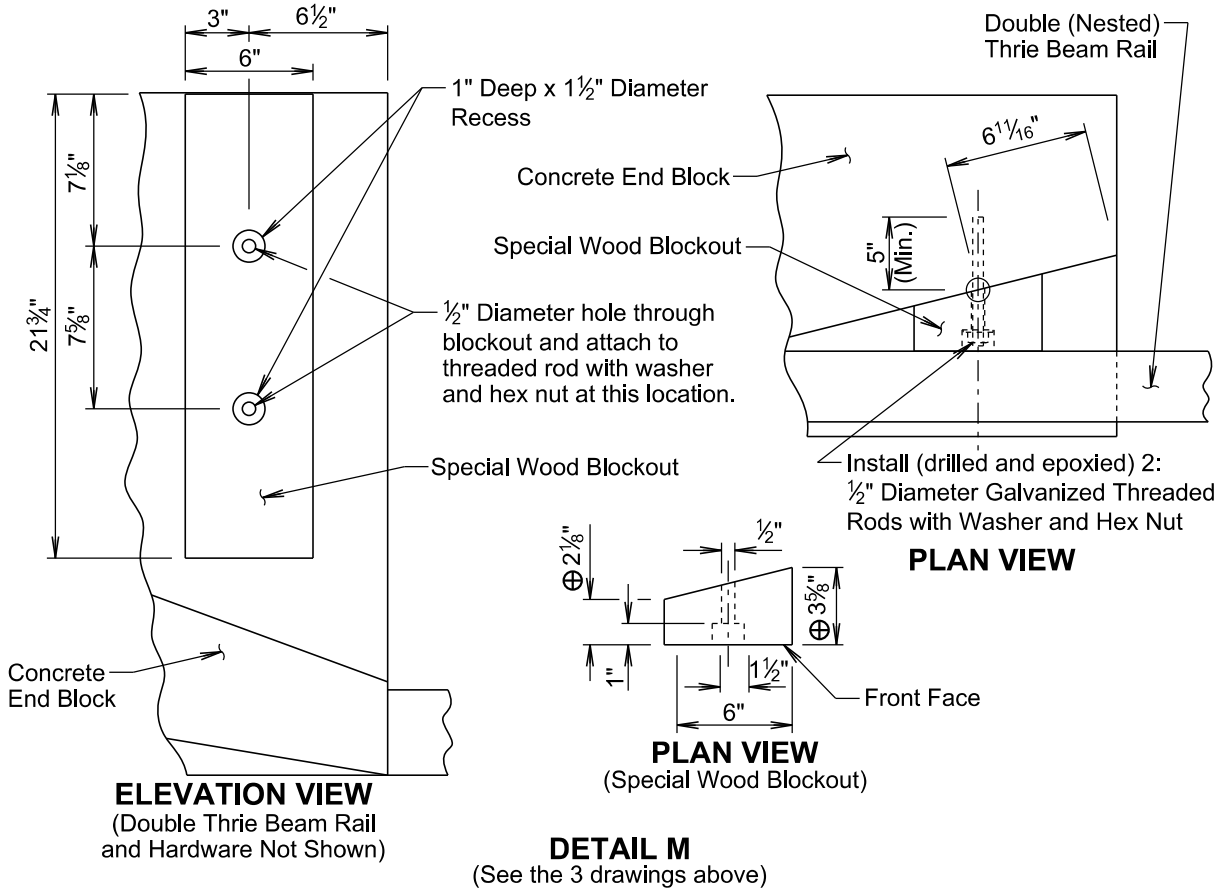

GENERAL NOTES FOR INSTALLING THREADED RODS INTO CONCRETE:

⊕ The dimensions shown are estimated based on original construction plans of the concrete end block. The special wood blockout will be cut as necessary such that the front face of the special wood blockout will align with the vertical front face of the concrete end block ±½".

The threaded rods will be ½" diameter and conform to ASTM F1554, Grade 55. The threaded rods will be embedded a minimum of 5" into the concrete.

The diameter of the drilled holes will not be less than ⅛" greater or more than ⅜" greater than the diameter of the threaded rods or as per the Manufacturer's recommendations. The holes will not be drilled using core bits. The drilled holes will be blown out with compressed air using a device that will reach the back of the hole to ensure that all debris or loose material has been removed prior to the epoxy injection.

The epoxy resin mixture will be of a type for bonding steel to hardened concrete and will conform to AASHTO M235 Type IV, Grade 3 (Equivalent to ASTM C881, Type IV, Grade 3).

Mix epoxy resin as recommended by the Manufacturer and apply by an injection method as approved by the Engineer. Beginning at the back of the drilled holes, fill the holes ⅓ to ½ full of epoxy, or as recommended by the Manufacturer, prior to insertion of the steel rod. Rotate the steel rod during installation to eliminate voids and ensure complete bonding of the rod. Insertion of the rods by the dipping or painting methods will not be allowed.

Loads will not be applied to the epoxy grouted threaded rods until the epoxy resin has had sufficient time to cure as specified by the epoxy resin Manufacturer.

September 14, 2019

Published Date: 2nd Qtr. 2021	SDDOT	*TYPE 1 RETROFIT GUARDRAIL TRANSITION (CONCRETE END BLOCK TO MIDWEST GUARDRAIL SYSTEM (MGS))*	*PLATE NUMBER* 630.51
			Sheet 2 of 3

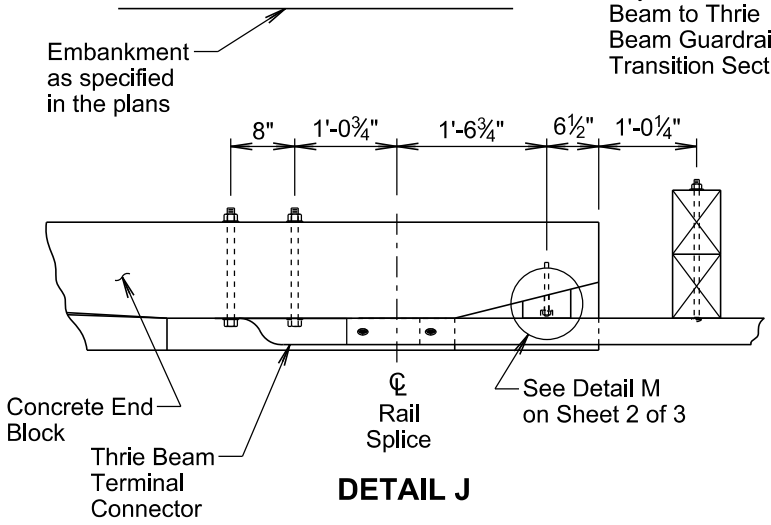

DETAIL J

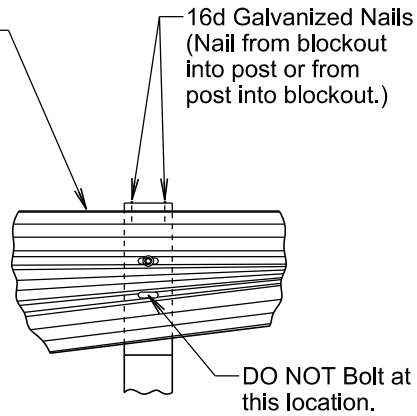

DETAIL L

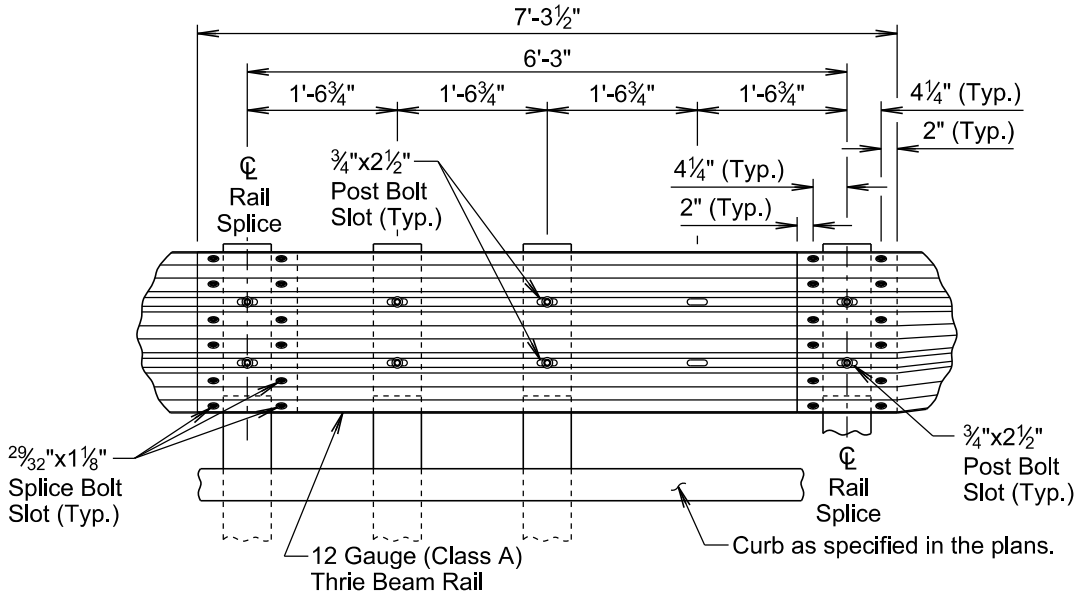

DETAIL K
(Special Thrie Beam Rail)

GENERAL NOTES:

Throughout the type 1 retrofit guardrail transition, slots in the rails will be provided as specified in the plans and by the Manufacturer. A drilled hole through the rail is not allowed as a replacement for a slot. If the Contractor must create a slot, a cutting torch or plasma cutter is not allowed. The slot edges will be smooth and free of burrs or notches.

All costs for furnishing and installing the type 1 retrofit guardrail transition including labor, equipment, and materials which includes all rail sections, posts and blockouts, special blockout, hardware, and incidentals will be included in the contract unit price per each for "Type 1 Retrofit Guardrail Transition".

September 14, 2019

Published Date: 2nd Qtr. 2021	SDDOT	*TYPE 1 RETROFIT GUARDRAIL TRANSITION (CONCRETE END BLOCK TO MIDWEST GUARDRAIL SYSTEM (MGS))*	PLATE NUMBER 630.51 Sheet 3 of 3

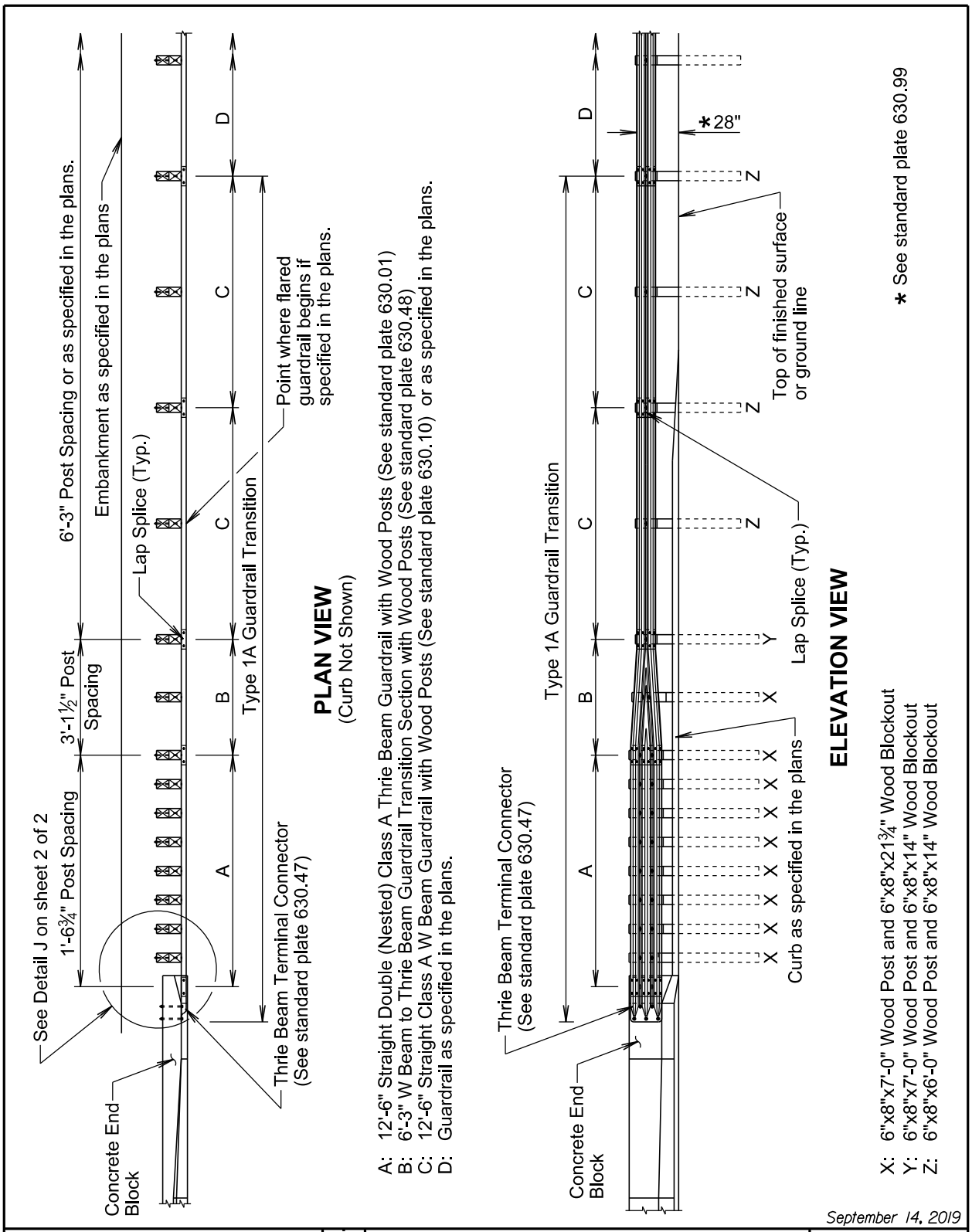
See Detail J on sheet 2 of 2
1'-6¾" Post Spacing
3'-1½" Post Spacing
6'-3" Post Spacing or as specified in the plans.
Embankment as specified in the plans
Lap Splice (Typ.)
Concrete End Block
Thrie Beam Terminal Connector (See standard plate 630.47)
A
B
C
C
D
Type 1A Guardrail Transition
Point where flared guardrail begins if specified in the plans.
PLAN VIEW
(Curb Not Shown)
A: 12'-6" Straight Double (Nested) Class A Thrie Beam Guardrail with Wood Posts (See standard plate 630.01)
B: 6'-3" W Beam to Thrie Beam Guardrail Transition Section with Wood Posts (See standard plate 630.48)
C: 12'-6" Straight Class A W Beam Guardrail with Wood Posts (See standard plate 630.10) or as specified in the plans.
D: Guardrail as specified in the plans.
Thrie Beam Terminal Connector (See standard plate 630.47)
Concrete End Block
Type 1A Guardrail Transition
A
B
C
C
D
*28"
Z
Z
Z
Z
Y
X
X
X
X
X
X
X
X
Top of finished surface or ground line
Lap Splice (Typ.)
Curb as specified in the plans
ELEVATION VIEW
* See standard plate 630.99
X: 6"x8"x7'-0" Wood Post and 6"x8"x21¾" Wood Blockout
Y: 6"x8"x7'-0" Wood Post and 6"x8"x14" Wood Blockout
Z: 6"x8"x6'-0" Wood Post and 6"x8"x14" Wood Blockout
September 14, 2019
Published Date: 2nd Qtr. 2021
SDDOT
TYPE 1A GUARDRAIL TRANSITION (CONCRETE END BLOCK TO W BEAM GUARDRAIL)
PLATE NUMBER
630.52
Sheet 1 of 2

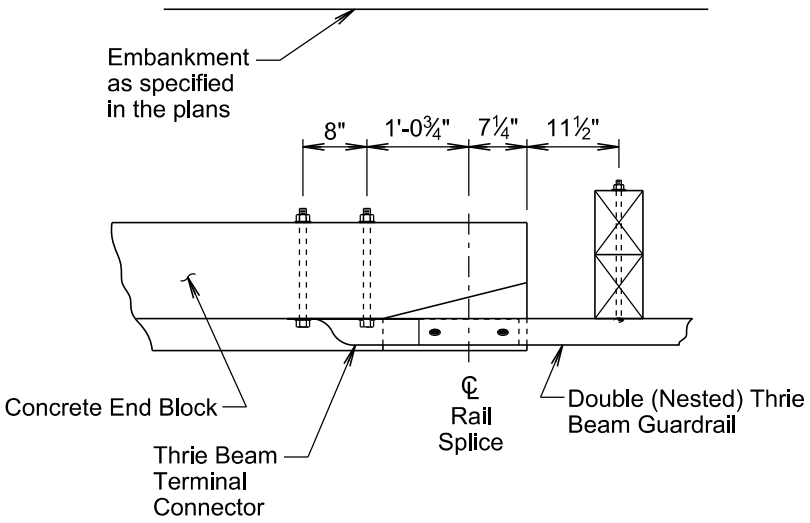

DETAIL J

GENERAL NOTES:

Throughout the type 1A guardrail transition, slots in the rails will be provided as specified in the plans and by the manufacturer. A drilled hole through the rail is not allowed as a replacement for a slot. If the Contractor must create a slot, a cutting torch or plasma cutter is not allowed. The slot edges will be smooth and free of burrs or notches.

All costs for furnishing and installing the straight double class A thrie beam guardrail including labor, equipment, and materials including the thrie beam rails, posts, blockouts, thrie beam terminal connector, and hardware will be incidental to the contract unit price per foot for "Straight Double Class A Thrie Beam Guardrail with Wood Posts".

All costs for furnishing and installing the type 1A guardrail transition including labor, equipment, and materials will be included in the contract unit price for the respective guardrail contract items.

September 14, 2019

Published Date: 2nd Qtr. 2021	SDDOT	TYPE 1A GUARDRAIL TRANSITION (CONCRETE END BLOCK TO W BEAM GUARDRAIL)	PLATE NUMBER 630.52 Sheet 2 of 2

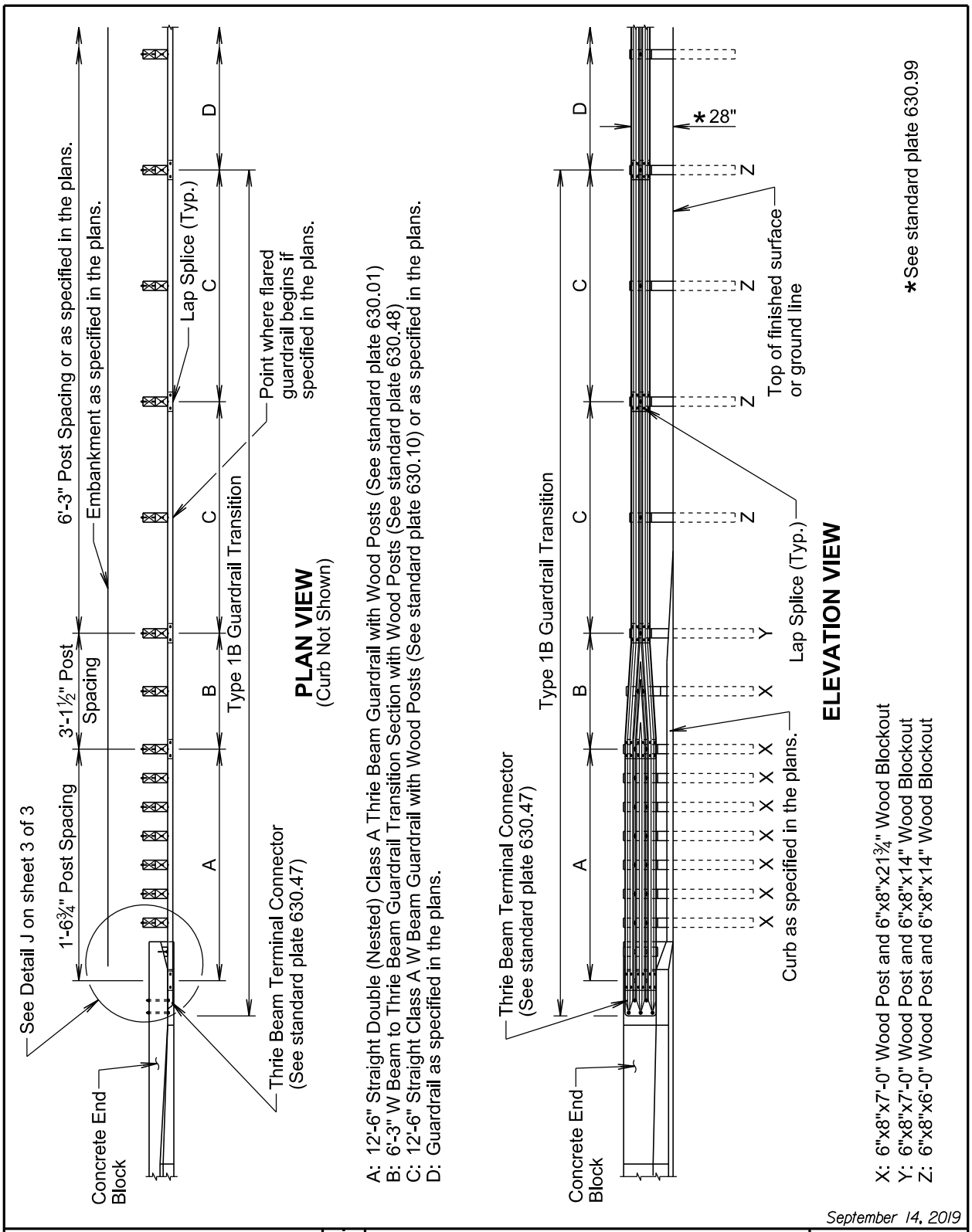
6'-3" Post Spacing or as specified in the plans.
Embankment as specified in the plans.
3'-1½" Post Spacing
1'-6¾" Post Spacing
See Detail J on sheet 3 of 3
Concrete End Block
Thrie Beam Terminal Connector (See standard plate 630.47)
Type 1B Guardrail Transition
Lap Splice (Typ.)
Point where flared guardrail begins if specified in the plans.
A
B
C
C
C
D
PLAN VIEW
(Curb Not Shown)
A: 12'-6" Straight Double (Nested) Class A Thrie Beam Guardrail with Wood Posts (See standard plate 630.01)
B: 6'-3" W Beam to Thrie Beam Guardrail Transition Section with Wood Posts (See standard plate 630.48)
C: 12'-6" Straight Class A W Beam Guardrail with Wood Posts (See standard plate 630.10) or as specified in the plans.
D: Guardrail as specified in the plans.
Thrie Beam Terminal Connector (See standard plate 630.47)
Type 1B Guardrail Transition
Concrete End Block
Curb as specified in the plans.
Lap Splice (Typ.)
Top of finished surface or ground line
28"
X
Y
Z
ELEVATION VIEW
*See standard plate 630.99
X: 6"x8"x7'-0" Wood Post and 6"x8"x21¾" Wood Blockout
Y: 6"x8"x7'-0" Wood Post and 6"x8"x14" Wood Blockout
Z: 6"x8"x6'-0" Wood Post and 6"x8"x14" Wood Blockout
September 14, 2019
Published Date: 2nd Qtr. 2021
SDDOT
TYPE 1B GUARDRAIL TRANSITION (CONCRETE END BLOCK TO W BEAM GUARDRAIL)
PLATE NUMBER
630.53
Sheet 1 of 3

GUARDRAIL REPAIR

BEADLE, BROOKINGS, BROWN, BUFFALO, CLARK, CODINGTON, DAY, DEUEL, EDMUNDS, FAULK, GRANT, HAMLIN, HAND, HYDE, KINGSBURY, MCPHERSON, MARSHALL, MOODY, ROBERTS, AND SPINK COUNTIES

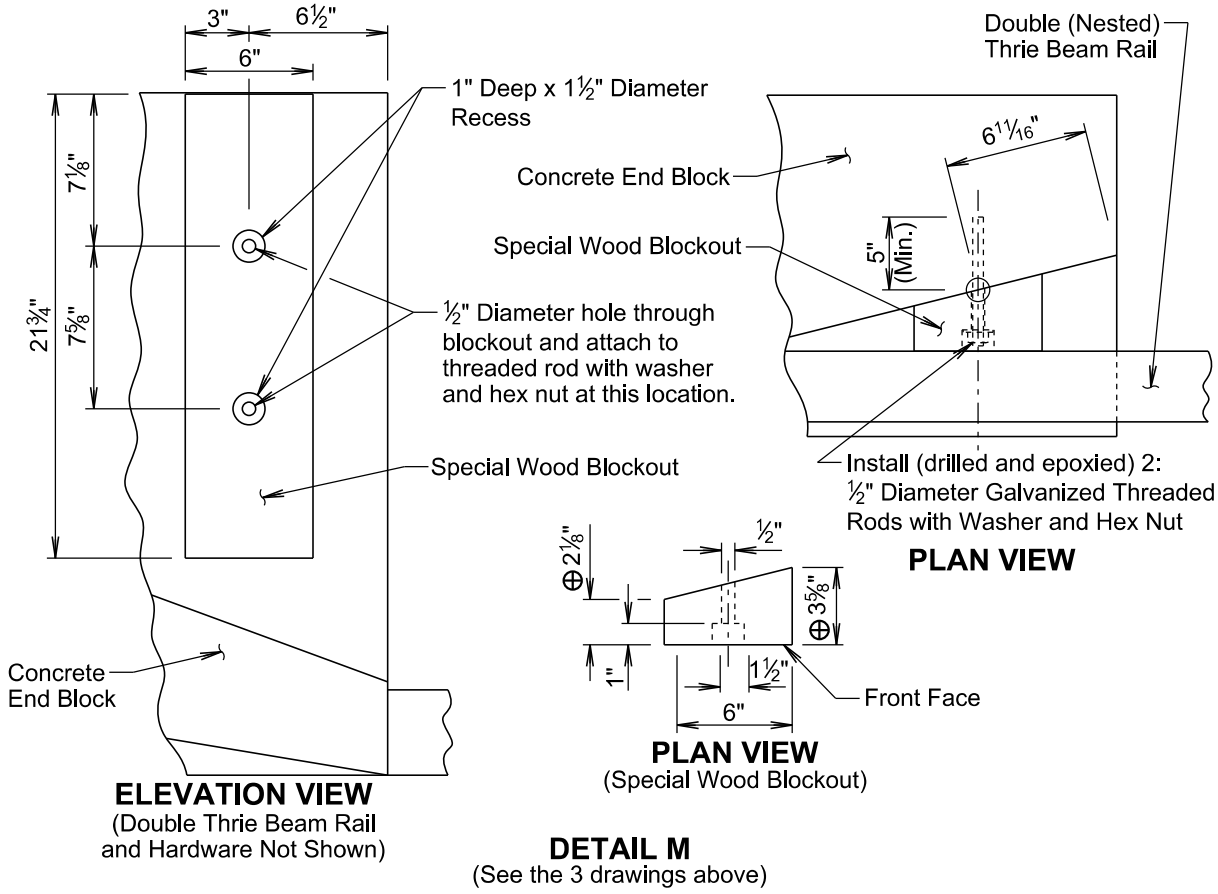

GENERAL NOTES FOR INSTALLING THREADED RODS INTO CONCRETE:

⊕ The dimensions shown are estimated based on original construction plans of the concrete end block. The special wood blockout will be cut as necessary such that the front face of the special wood blockout will align with the vertical front face of the concrete end block ±½".

The threaded rods will be ½" diameter and conform to ASTM F1554, Grade 55. The threaded rods will be embedded a minimum of 5" into the concrete.

The diameter of the drilled holes will not be less than ⅛" greater or more than ⅜" greater than the diameter of the threaded rods or as per the Manufacturer's recommendations. The holes will not be drilled using core bits. The drilled holes will be blown out with compressed air using a device that will reach the back of the hole to ensure that all debris or loose material has been removed prior to the epoxy injection.

The epoxy resin mixture will be of a type for bonding steel to hardened concrete and will conform to AASHTO M235 Type IV, Grade 3 (Equivalent to ASTM C881, Type IV, Grade 3).

Mix epoxy resin as recommended by the Manufacturer and apply by an injection method as approved by the Engineer. Beginning at the back of the drilled holes, fill the holes ⅓ to ½ full of epoxy, or as recommended by the Manufacturer, prior to insertion of the steel rod. Rotate the steel rod during installation to eliminate voids and ensure complete bonding of the rod. Insertion of the rods by the dipping or painting methods will not be allowed.

Loads will not be applied to the epoxy grouted threaded rods until the epoxy resin has had sufficient time to cure as specified by the epoxy resin Manufacturer.

September 14, 2019

Published Date: 2nd Qtr. 2021	SDDOT	*TYPE 1B GUARDRAIL TRANSITION (CONCRETE END BLOCK TO W BEAM GUARDRAIL)*	PLATE NUMBER 630.53 Sheet 2 of 3

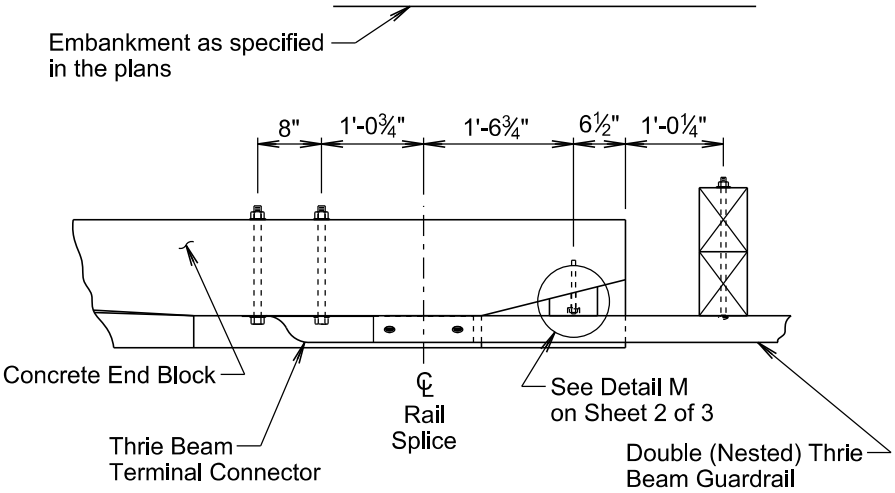

DETAIL J

GENERAL NOTES:

Throughout the type 1B guardrail transition, slots in the rails will be provided as specified in the plans and by the Manufacturer. A drilled hole through the rail is not allowed as a replacement for a slot. If the Contractor must create a slot, a cutting torch or plasma cutter is not allowed. The slot edges will be smooth and free of burrs or notches.

All costs for furnishing and installing the straight double class A thrie beam guardrail including labor, equipment, and materials including the thrie beam rails, posts, blockouts, special blockout, thrie beam terminal connector, and hardware will be incidental to the contract unit price per foot for "Straight Double Class A Thrie Beam Guardrail with Wood Posts".

All costs for furnishing and installing the type 1B guardrail transition including labor, equipment, and materials will be included in the contract unit price for the respective guardrail contract items.

September 14, 2019

Published Date: 2nd Qtr. 2021	SDDOT	TYPE 1B GUARDRAIL TRANSITION (CONCRETE END BLOCK TO W BEAM GUARDRAIL)	PLATE NUMBER 630.53 Sheet 3 of 3

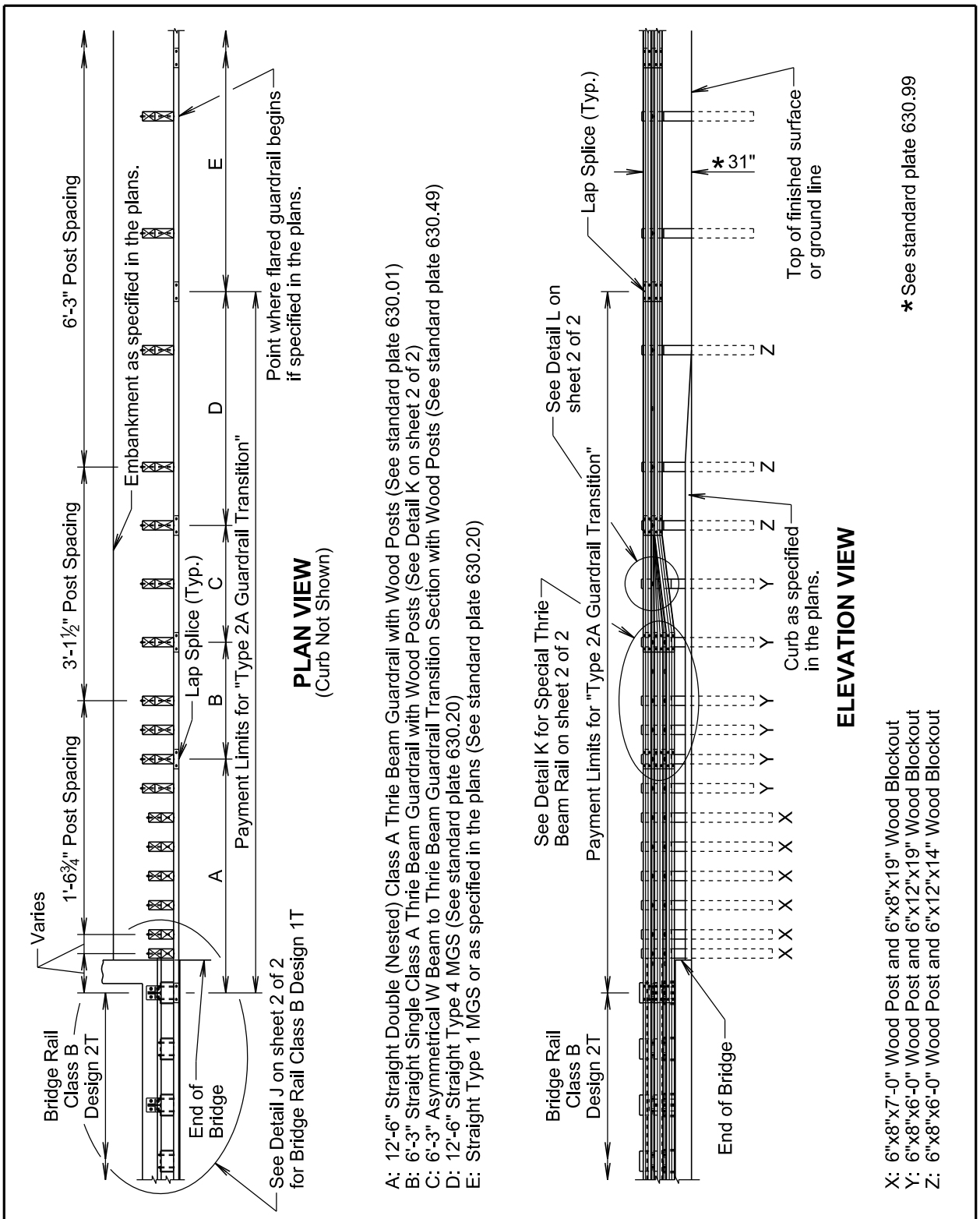
Varies
1'-6¾" Post Spacing
3'-1½" Post Spacing
6'-3" Post Spacing
Embankment as specified in the plans.
Bridge Rail Class B Design 2T
End of Bridge
Lap Splice (Typ.)
A
B
C
D
E
Payment Limits for "Type 2A Guardrail Transition"
Point where flared guardrail begins if specified in the plans.
See Detail J on sheet 2 of 2 for Bridge Rail Class B Design 1T
PLAN VIEW
(Curb Not Shown)
A: 12'-6" Straight Double (Nested) Class A Thrie Beam Guardrail with Wood Posts (See standard plate 630.01)
B: 6'-3" Straight Single Class A Thrie Beam Guardrail with Wood Posts (See Detail K on sheet 2 of 2)
C: 6'-3" Asymmetrical W Beam to Thrie Beam Guardrail Transition Section with Wood Posts (See standard plate 630.49)
D: 12'-6" Straight Type 4 MGS (See standard plate 630.20)
E: Straight Type 1 MGS or as specified in the plans (See standard plate 630.20)
Bridge Rail Class B Design 2T
See Detail K for Special Thrie Beam Rail on sheet 2 of 2
Payment Limits for "Type 2A Guardrail Transition"
See Detail L on sheet 2 of 2
Lap Splice (Typ.)
* 31"
Top of finished surface or ground line
Curb as specified in the plans.
End of Bridge
ELEVATION VIEW
* See standard plate 630.99
X: 6"x8"x7'-0" Wood Post and 6"x8"x19" Wood Blockout
Y: 6"x8"x6'-0" Wood Post and 6"x12"x19" Wood Blockout
Z: 6"x8"x6'-0" Wood Post and 6"x12"x14" Wood Blockout
September 14, 2019
Published Date: 2nd Qtr. 2021
SDDOT
TYPE 2A GUARDRAIL TRANSITION (BRIDGE RAIL CLASS B DESIGN 1T OR 2T TO MIDWEST GUARDRAIL SYSTEM (MGS))
PLATE NUMBER
630.54
Sheet 1 of 2

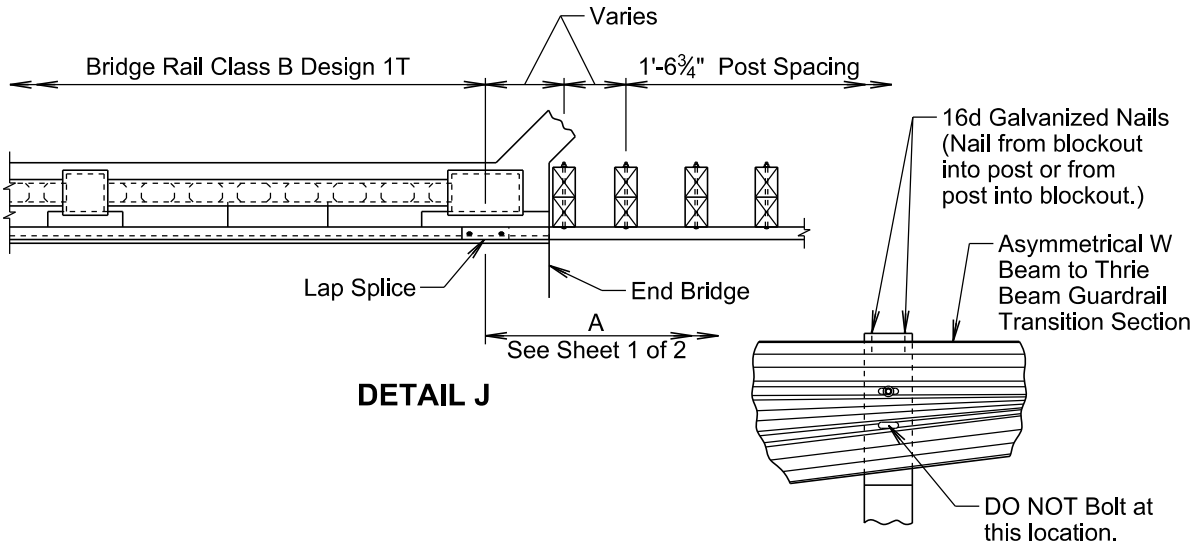

DETAIL J

DETAIL L

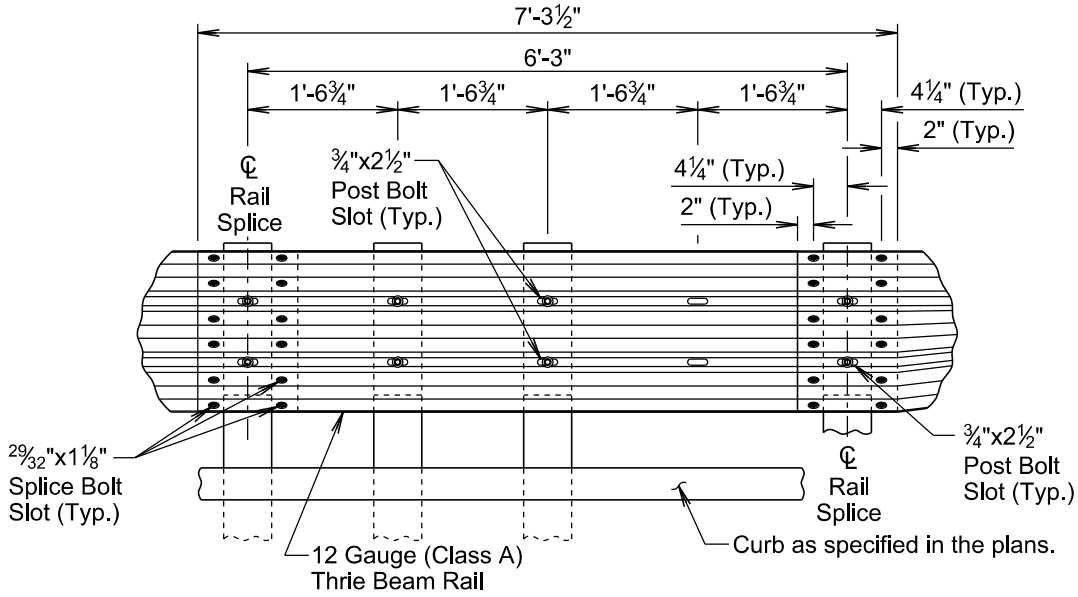

DETAIL K
(Special Thrie Beam Rail)

GENERAL NOTES:

Throughout the type 2A guardrail transition, slots in the rails will be provided as specified in the plans and by the manufacturer. A drilled hole through the rail is not allowed as a replacement for a slot. If the Contractor must create a slot, a cutting torch or plasma cutter is not allowed. The slot edges will be smooth and free of burrs or notches.

All costs for furnishing and installing the type 2A guardrail transition including labor, equipment, and materials which includes all rail sections, posts and blockouts, hardware, and incidentals will be included in the contract unit price per each for "Type 2A Guardrail Transition".

September 14, 2019

Published Date: 2nd Qtr. 2021	SDDOT	*TYPE 2A GUARDRAIL TRANSITION (BRIDGE RAIL CLASS B DESIGN 1T OR 2T TO MIDWEST GUARDRAIL SYSTEM (MGS))*	PLATE NUMBER 630.54 Sheet 2 of 2

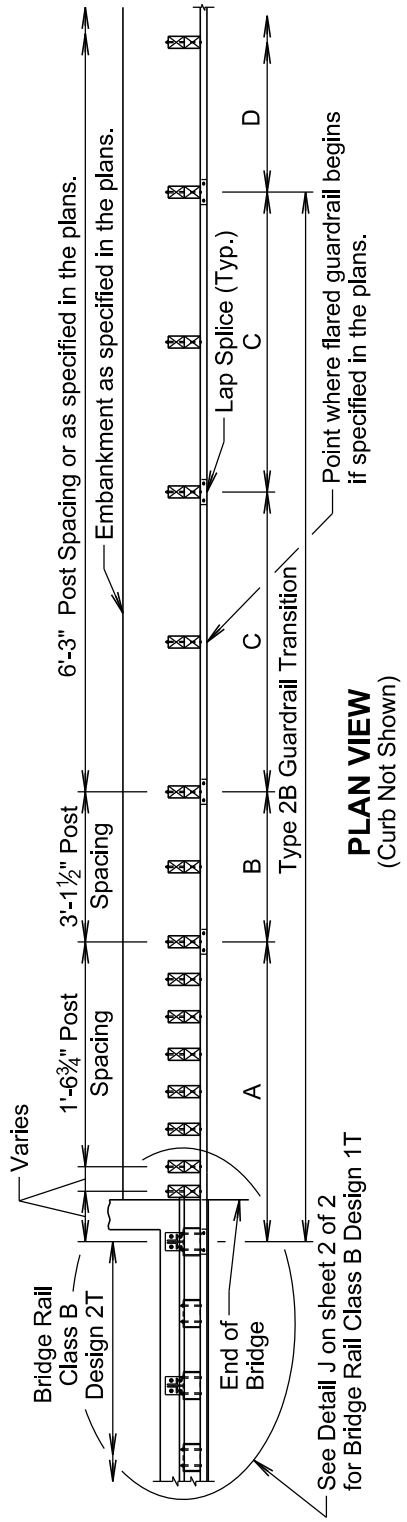

PLAN VIEW
(Curb Not Shown)

A: 12'-6" Straight Double (Nested) Class A Thrie Beam Guardrail with Wood Posts (See standard plate 630.01)
B: 6'-3" W Beam to Thrie Beam Guardrail Transition Section with Wood Posts (See standard plate 630.48)
C: 12'-6" Straight Class A W Beam Guardrail with Wood Posts (See standard plate 630.10) or as specified in the plans.
D: Guardrail as specified in the plans.

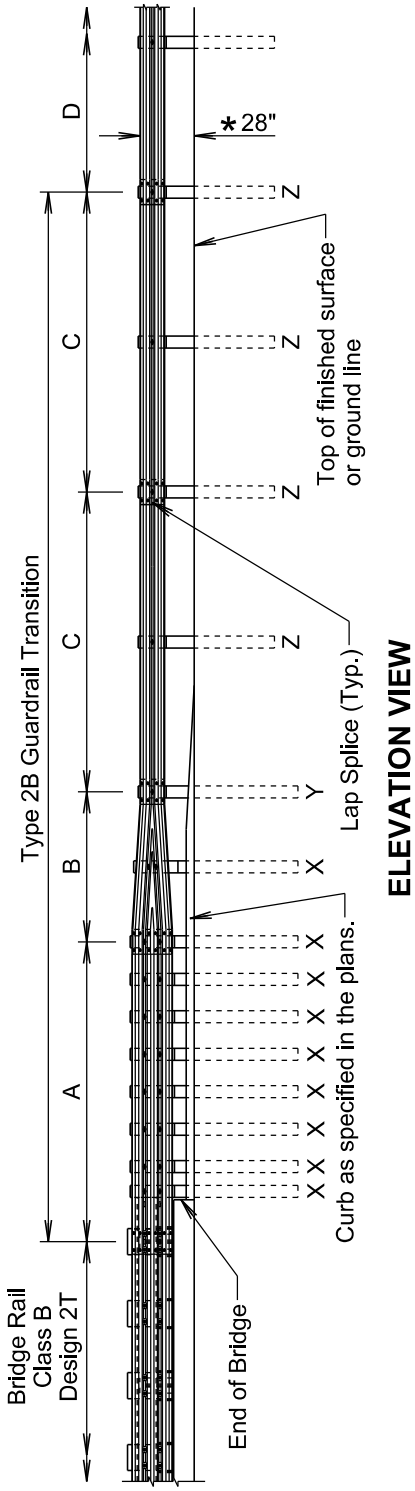

ELEVATION VIEW

* See standard plate 630.99

X: 6"x8"x7'-0" Wood Post and 6"x8"x21¾" Wood Blockout
Y: 6"x8"x7'-0" Wood Post and 6"x8"x14" Wood Blockout
Z: 6"x8"x6'-0" Wood Post and 6"x8"x14" Wood Blockout

September 14, 2019

Published Date: 2nd Qtr. 2021	SDDOT	TYPE 2B GUARDRAIL TRANSITION (BRIDGE RAIL CLASS B DESIGN 1T OR 2T TO W BEAM GUARDRAIL)	PLATE NUMBER 630.55 Sheet 1 of 2

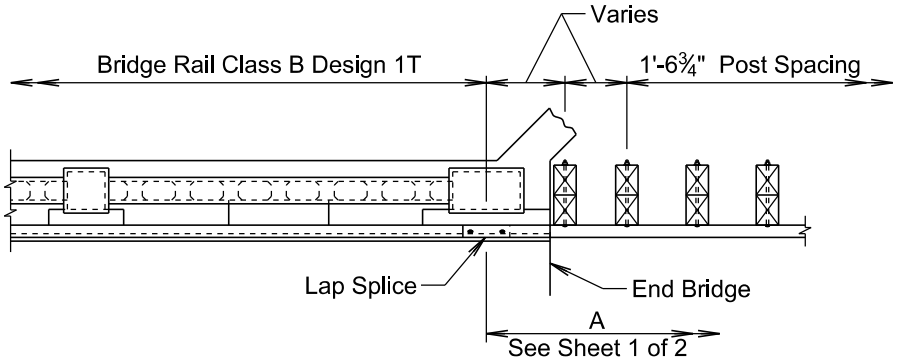

DETAIL J

GENERAL NOTES:

Throughout the type 2B guardrail transition, slots in the rails will be provided as specified in the plans and by the manufacturer. A drilled hole through the rail is not allowed as a replacement for a slot. If the Contractor must create a slot, a cutting torch or plasma cutter is not allowed. The slot edges will be smooth and free of burrs or notches.

All costs for furnishing and installing the type 2B guardrail transition including labor, equipment, and materials will be included in the contract unit price for the respective guardrail contract items.

September 14, 2019

Published Date: 2nd Qtr. 2021	SDDOT	TYPE 2B GUARDRAIL TRANSITION (BRIDGE RAIL CLASS B DESIGN 1T OR 2T TO W BEAM GUARDRAIL)	PLATE NUMBER 630.55 Sheet 2 of 2

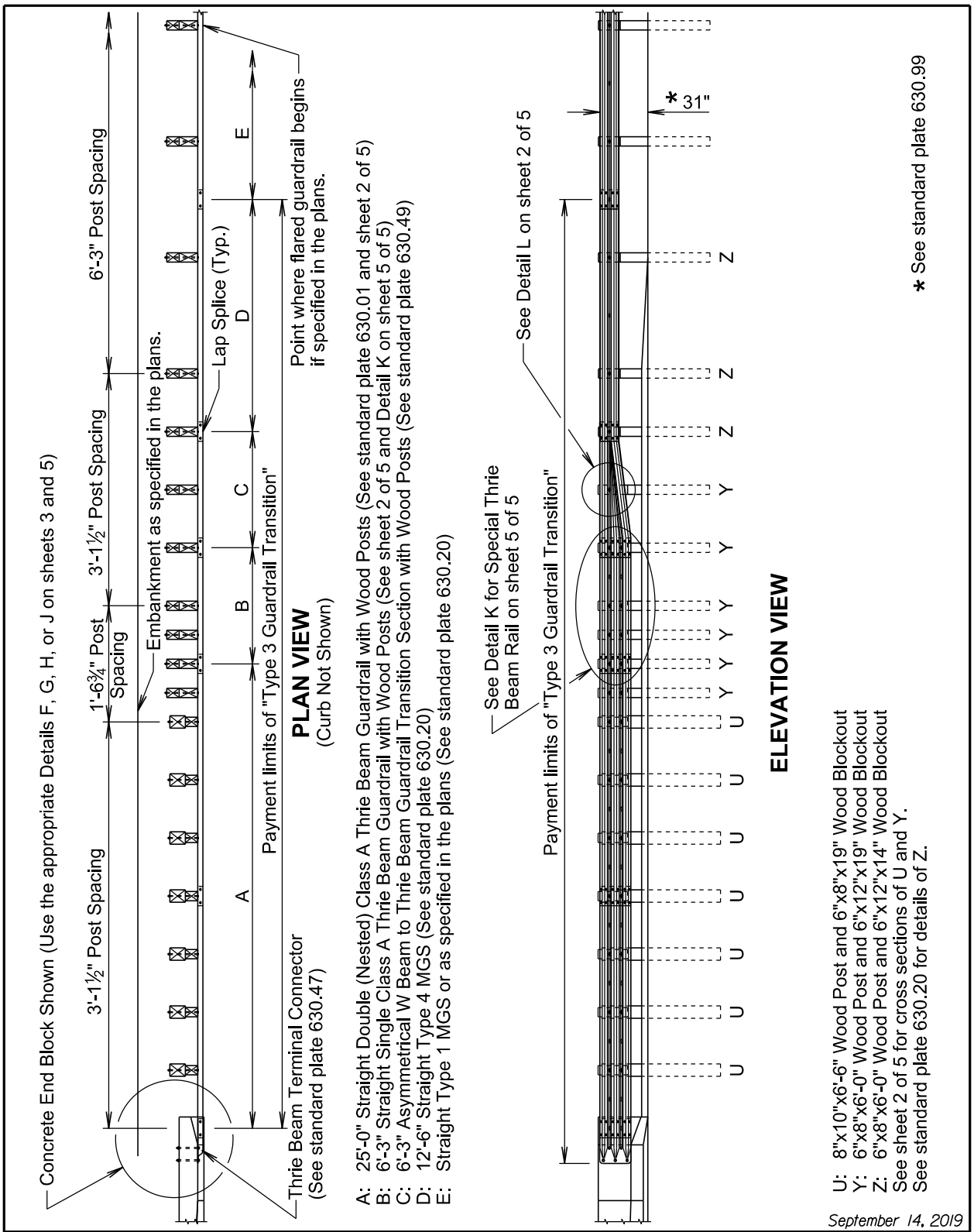
Concrete End Block Shown (Use the appropriate Details F, G, H, or J on sheets 3 and 5)
3'-1½" Post Spacing
1'-6¾" Post Spacing
3'-1½" Post Spacing
6'-3" Post Spacing
Embankment as specified in the plans.
Lap Splice (Typ.)
Point where flared guardrail begins if specified in the plans.
A
B
C
D
E
Payment limits of "Type 3 Guardrail Transition"
Thrie Beam Terminal Connector (See standard plate 630.47)
PLAN VIEW
(Curb Not Shown)
A: 25'-0" Straight Double (Nested) Class A Thrie Beam Guardrail with Wood Posts (See standard plate 630.01 and sheet 2 of 5)
B: 6'-3" Straight Single Class A Thrie Beam Guardrail with Wood Posts (See sheet 2 of 5 and Detail K on sheet 5 of 5)
C: 6'-3" Asymmetrical W Beam to Thrie Beam Guardrail Transition Section with Wood Posts (See standard plate 630.49)
D: 12'-6" Straight Type 4 MGS (See standard plate 630.20)
E: Straight Type 1 MGS or as specified in the plans (See standard plate 630.20)
See Detail L on sheet 2 of 5
See Detail K for Special Thrie Beam Rail on sheet 5 of 5
Payment limits of "Type 3 Guardrail Transition"
* 31"
U U U

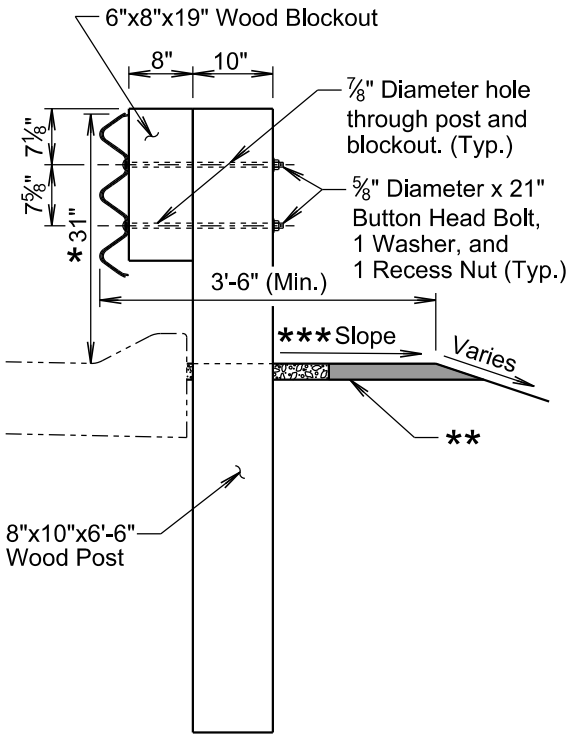

CROSS SECTION
(Post U)

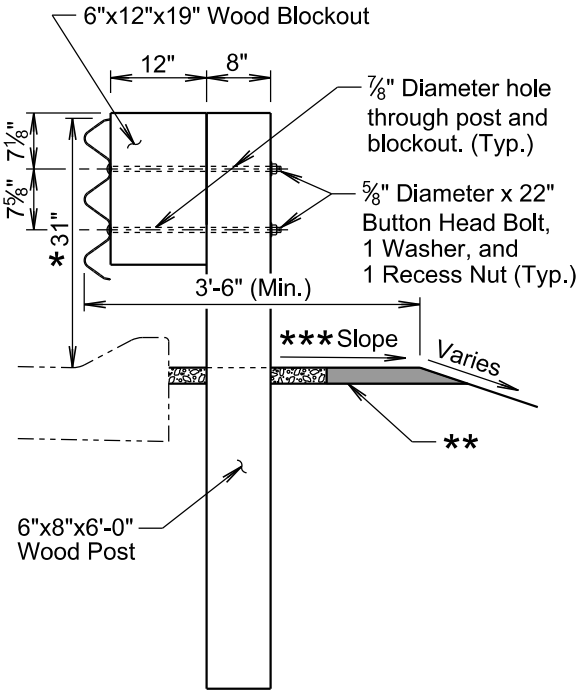

CROSS SECTION
(Post Y)
(Section through special single thrie beam rail portion)

* See standard plate 630.99

** 2" asphalt concrete or as specified in the plans and see standard plate 630.98 for leave-out and backfill requirements.

*** The cross slope will be as specified in the plans; however, the cross slope will not be steeper than a 10:1 slope.

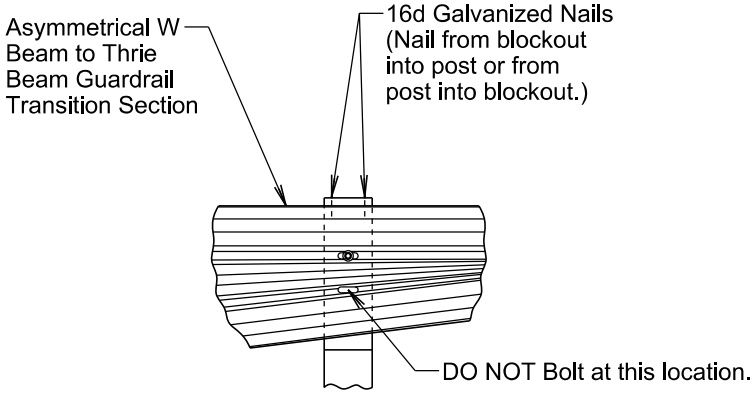

DETAIL L

September 14, 2019

Published Date: 2nd Qtr. 2021	SDDOT	TYPE 3 GUARDRAIL TRANSITION (VARIOUS BRIDGE RAILS AND CONCRETE END BLOCKS TO MIDWEST GUARDRAIL SYSTEM (MGS))	PLATE NUMBER 630.56 Sheet 2 of 5

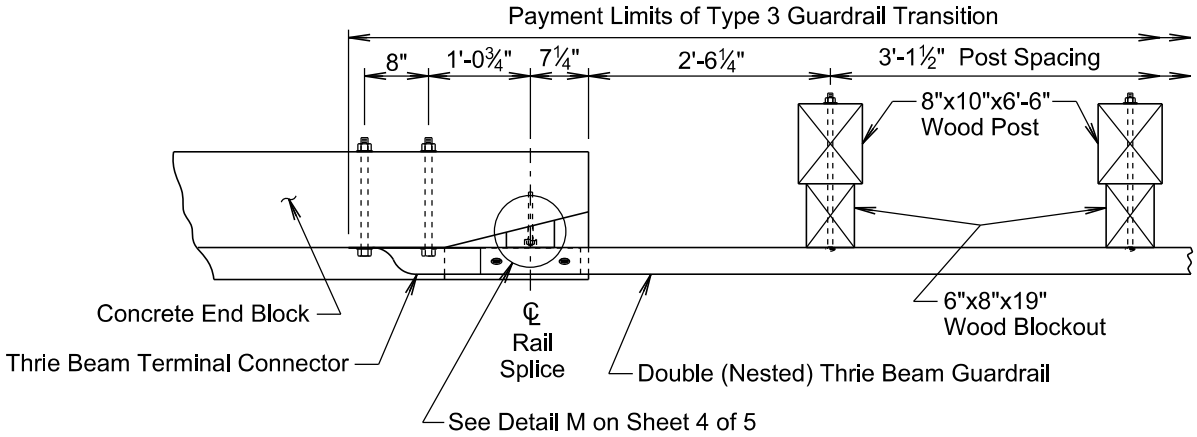

DETAIL F

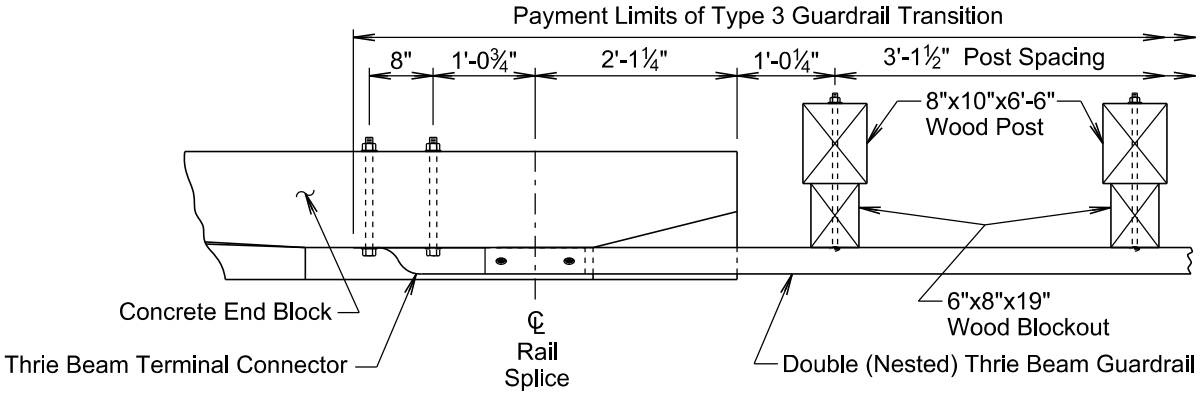

DETAIL G

September 14, 2019

Published Date: 2nd Qtr. 2021	SDDOT	*TYPE 3 GUARDRAIL TRANSITION (VARIOUS BRIDGE RAILS OR CONCRETE END BLOCKS TO MIDWEST GUARDRAIL SYSTEM (MGS))*	PLATE NUMBER 630.56 Sheet 3 of 5

GUARDRAIL REPAIR

BEADLE, BROOKINGS, BROWN, BUFFALO, CLARK, CODINGTON, DAY, DEUEL, EDMUNDS, FAULK, GRANT, HAMLIN, HAND, HYDE, KINGSBURY, MCPHERSON, MARSHALL, MOODY, ROBERTS, AND SPINK COUNTIES

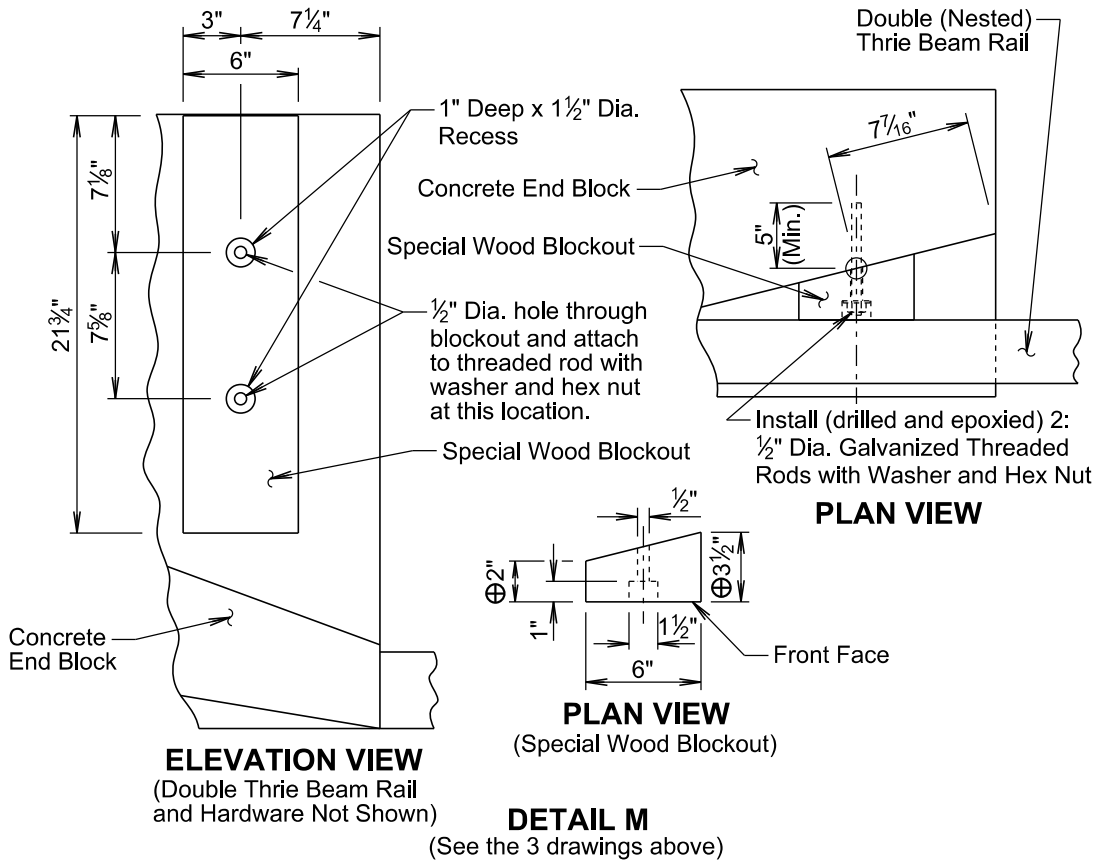

GENERAL NOTES FOR INSTALLING THREADED RODS INTO CONCRETE:

⊕ The dimensions shown are estimated based on original construction plans of the concrete end block. The special wood blockout will be cut as necessary such that the front face of the special wood blockout will align with the vertical front face of the concrete end block ± ½".

The threaded rods will be ½" diameter and conform to ASTM F1554, Grade 55. The threaded rods will be embedded a minimum of 5" into the concrete.

The diameter of the drilled holes will not be less than ⅛" greater or more than ⅜" greater than the diameter of the threaded rods or as per the Manufacturer's recommendations. The holes will not be drilled using core bits. The drilled holes will be blown out with compressed air using a device that will reach the back of the hole to ensure that all debris or loose material has been removed prior to the epoxy injection.

The epoxy resin mixture will be of a type for bonding steel to hardened concrete and shall conform to AASHTO M235 Type IV, Grade 3 (Equivalent to ASTM C881, Type IV, Grade 3).

Mix epoxy resin as recommended by the Manufacturer and apply by an injection method as approved by the Engineer. Beginning at the back of the drilled holes, fill the holes ⅓ to ½ full of epoxy, or as recommended by the Manufacturer, prior to insertion of the steel rod. Rotate the steel rod during installation to eliminate voids and ensure complete bonding of the rod. Insertion of the rods by the dipping or painting methods will not be allowed.

Loads will not be applied to the epoxy grouted threaded rods until the epoxy resin has had sufficient time to cure as specified by the epoxy resin Manufacturer.

September 14, 2019

Published Date: 2nd Qtr. 2021	SDDOT	TYPE 3 GUARDRAIL TRANSITION (VARIOUS BRIDGE RAILS OR CONCRETE END BLOCKS TO MIDWEST GUARDRAIL SYSTEM (MGS))	PLATE NUMBER 630.56 Sheet 4 of 5

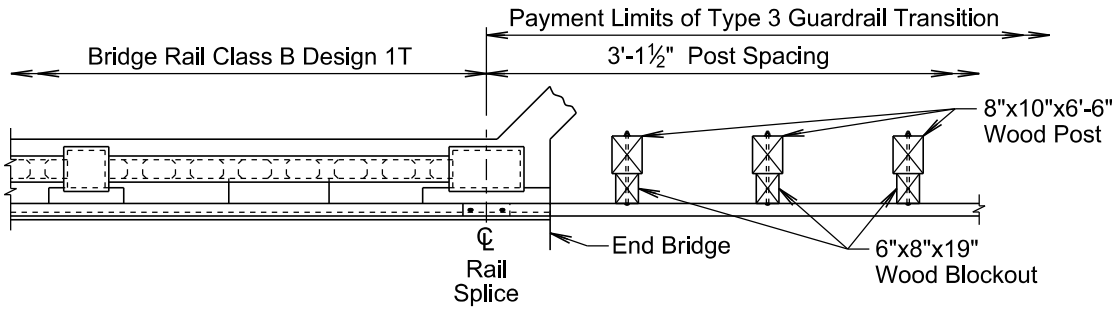

DETAIL H

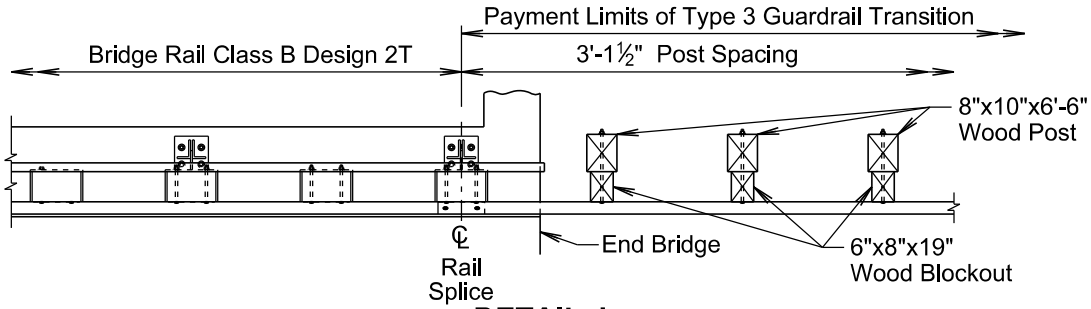

DETAIL J

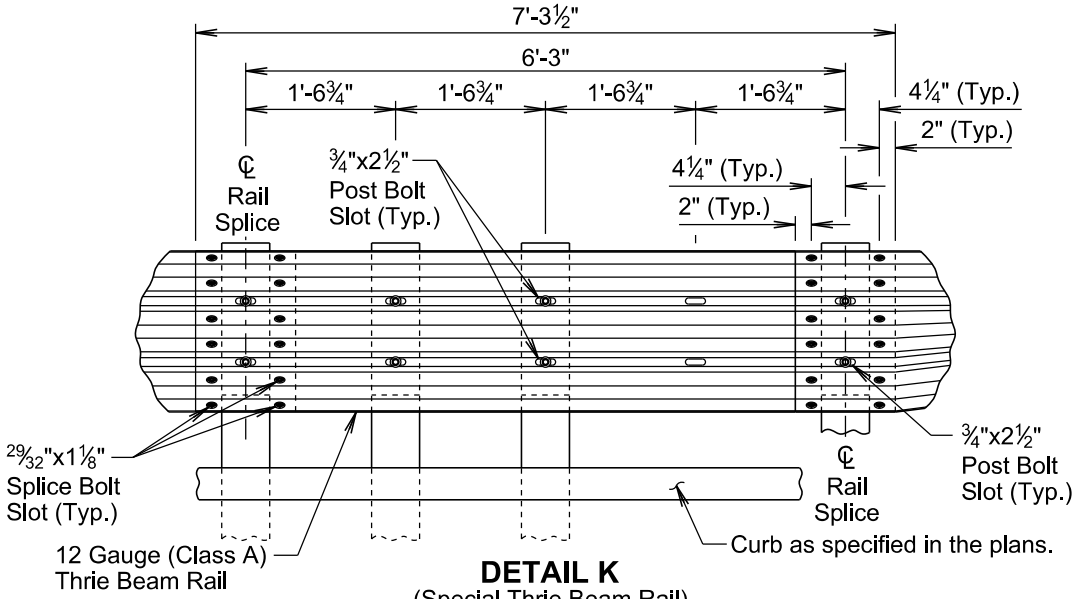

DETAIL K
(Special Thrie Beam Rail)

GENERAL NOTES:

Throughout the type 3 guardrail transition, slots in the rails will be provided as specified in the plans and by the manufacturer. A drilled hole through the rail is not allowed as a replacement for a slot. If the Contractor must create a slot, a cutting torch or plasma cutter is not allowed. The slot edges will be smooth and free of burrs or notches.

All costs for furnishing and installing the type 3 guardrail transition including labor, equipment, and materials which includes all rail sections, posts and blockouts, hardware, and incidentals will be included in the contract unit price per each for "Type 3 Guardrail Transition".

September 14, 2019

Published Date: 2nd Qtr. 2021	SDDOT	*TYPE 3 GUARDRAIL TRANSITION (VARIOUS BRIDGE RAILS AND CONCRETE END BLOCKS TO MIDWEST GUARDRAIL SYSTEM (MGS))*	PLATE NUMBER 630.56
			Sheet 5 of 5

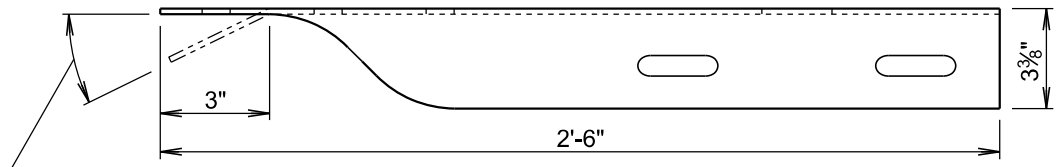

An extra hole and an approximate 26° bend will be required only for the Special Anchor Assembly and Breakaway Cable Terminal. The Modified W Beam Terminal Connector placement detail is shown on standard plates 630.84 and 630.85.

TOP VIEW
(W Beam Terminal Connector)

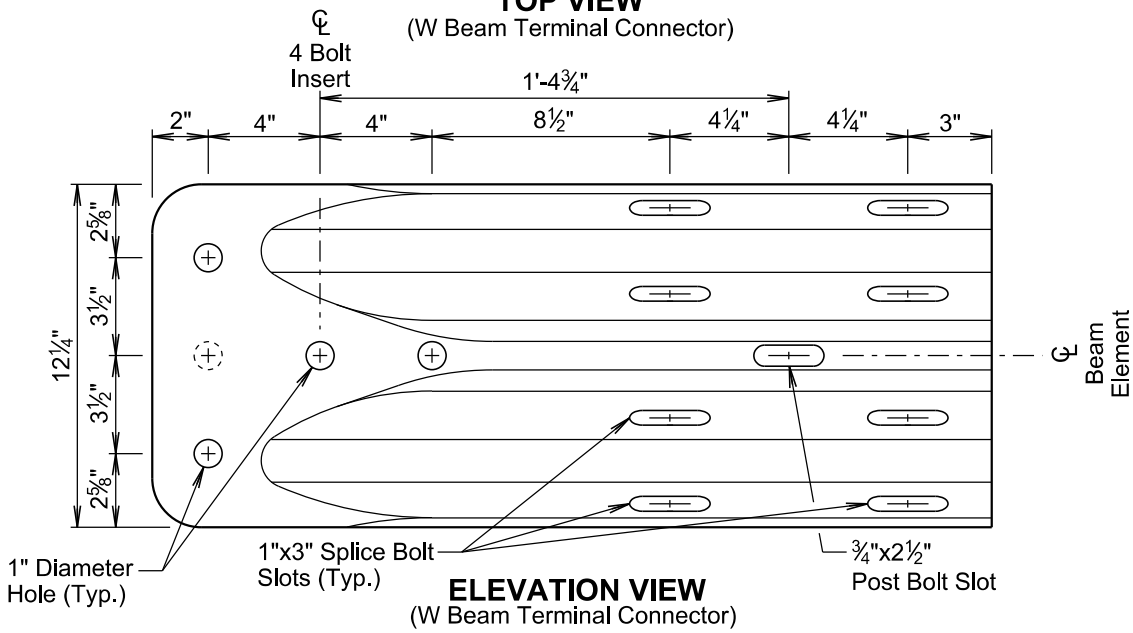

ELEVATION VIEW
(W Beam Terminal Connector)

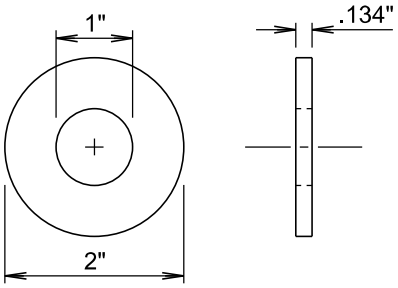

1" STEEL WASHER
(8 washers required)

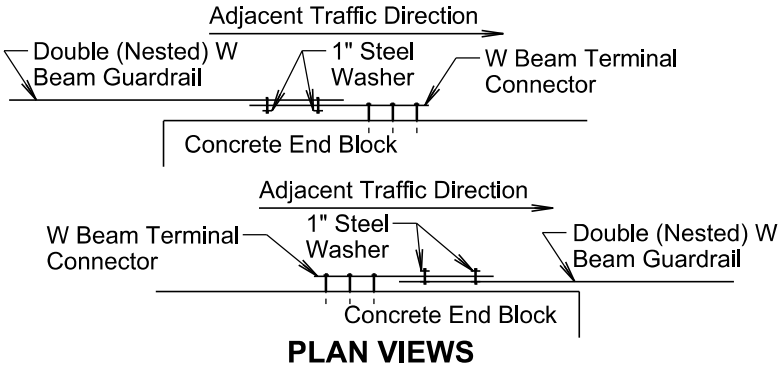

PLAN VIEWS
(Typical Locations of 1" Steel Washers)
(Washers are required at these lap splices)

GENERAL NOTES:

W Beam Terminal Connectors will be 10 gauge.

When the W beam terminal connector is used to connect the rail to the bridge or concrete end block, 1" steel washers will be used at the lap splice and the washers will be in direct contact with the 3" slots of the W beam terminal connector. See the drawings above for the typical locations of the 1" steel washers.

There will be no separate payment for furnishing and installing the W beam terminal connector. All costs for furnishing and installing the W beam terminal connector will be incidental to the contract unit price of the respective guardrail item it is attached to.

September 14, 2019

Published Date: 2nd Qtr. 2021	SDDOT	*W BEAM TERMINAL CONNECTOR*	PLATE NUMBER 630.59
			Sheet 1 of 1

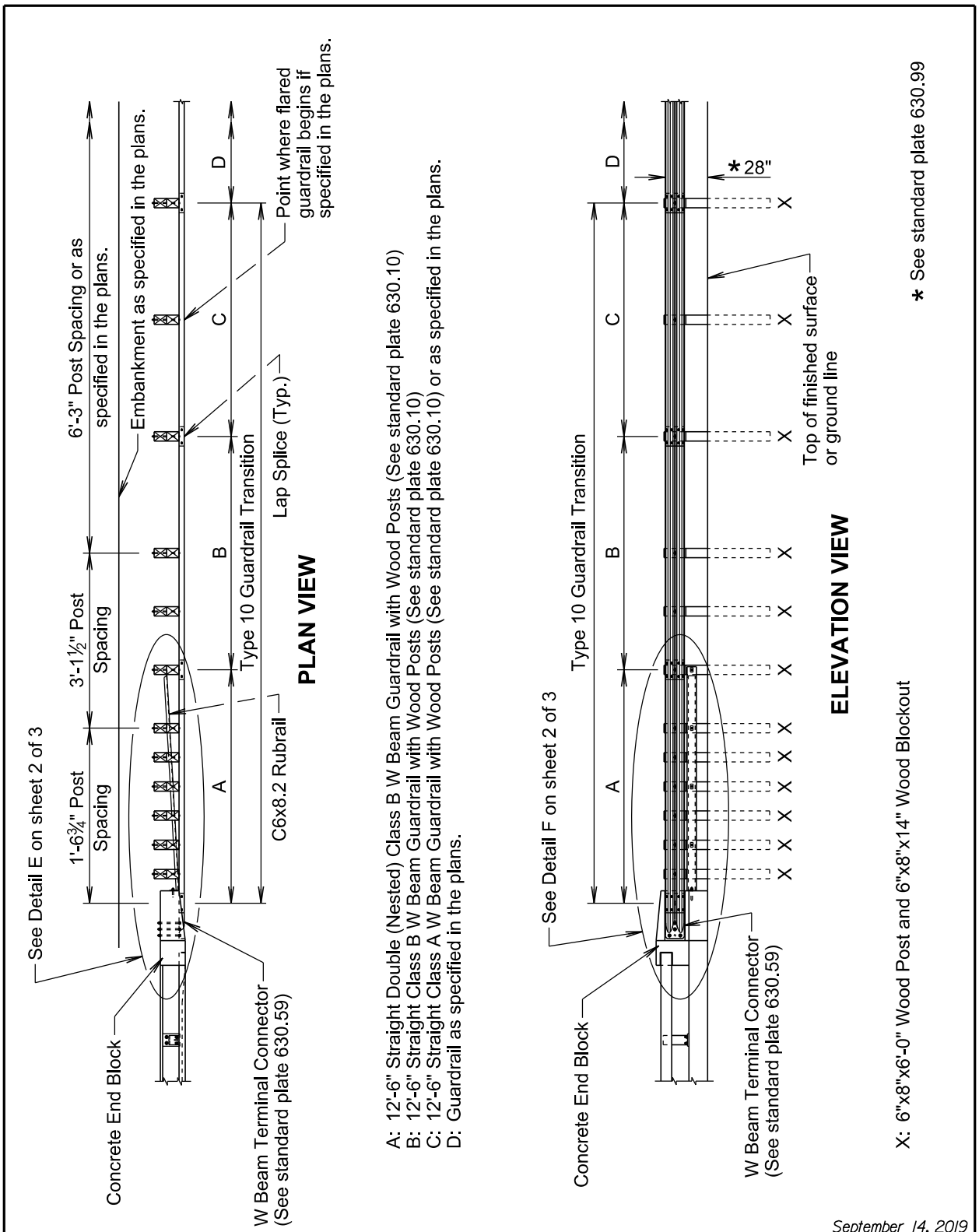

Published Date: 2nd Qtr. 2021	SDDOT	TYPE 10 GUARDRAIL TRANSITION (CONCRETE END BLOCK TO W BEAM GUARDRAIL)	PLATE NUMBER 630.60 Sheet 1 of 3

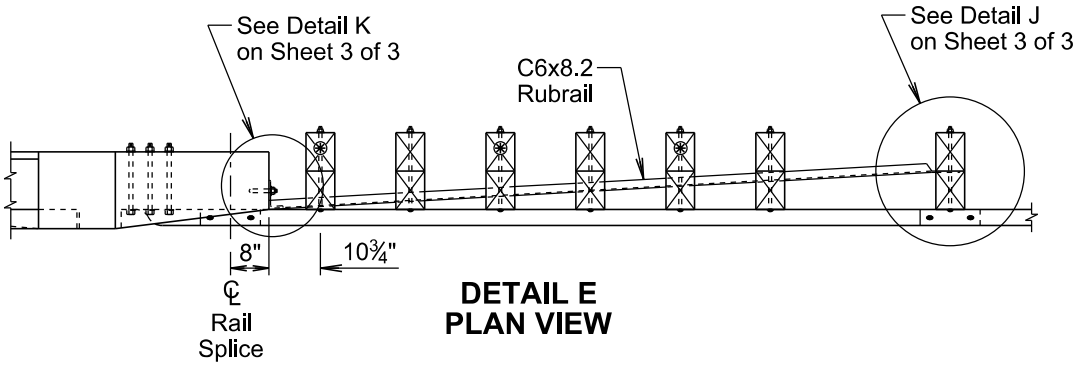

DETAIL E
PLAN VIEW

⊛ Rubrail will not be attached to these posts.

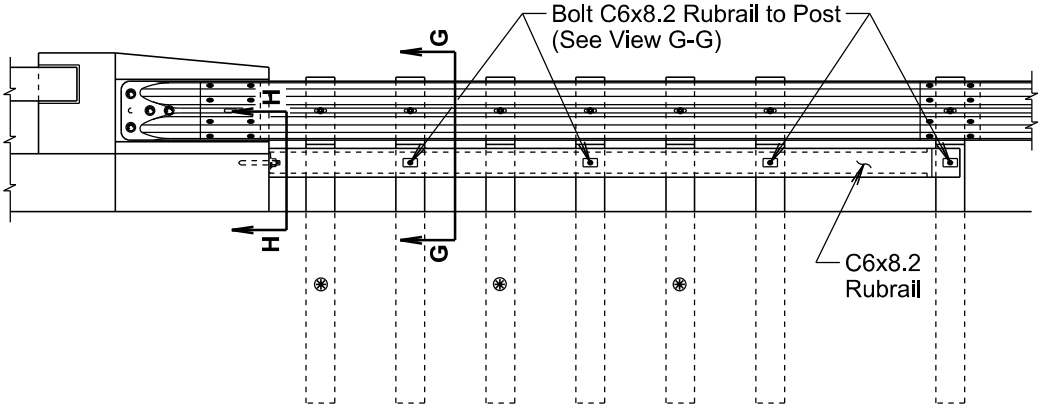

DETAIL F
ELEVATION VIEW

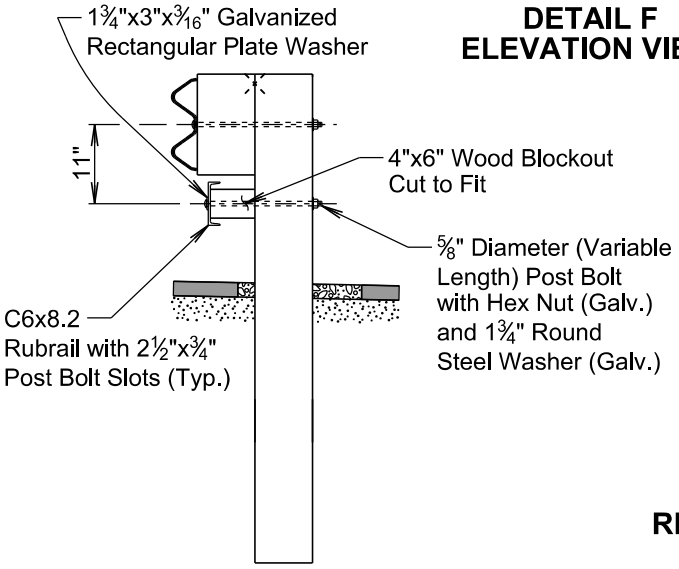

VIEW G-G

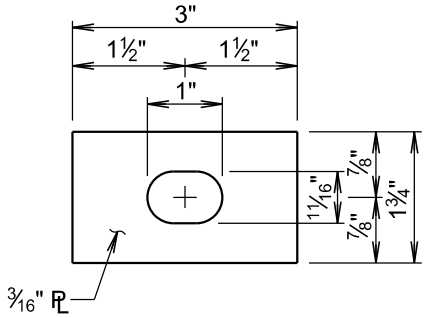

RECTANGULAR PLATE WASHER

September 14, 2019

Published Date: 2nd Qtr. 2021	SDDOT	*TYPE 10 GUARDRAIL TRANSITION (CONCRETE END BLOCK TO W BEAM GUARDRAIL)*	PLATE NUMBER 630.60 Sheet 2 of 3

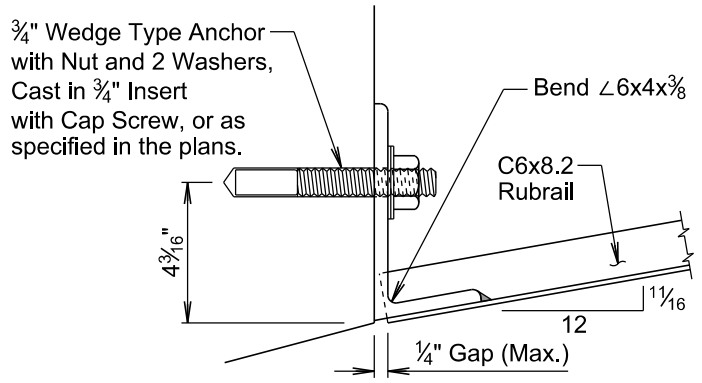

DETAIL K
(Double Class B Rail Not Shown)

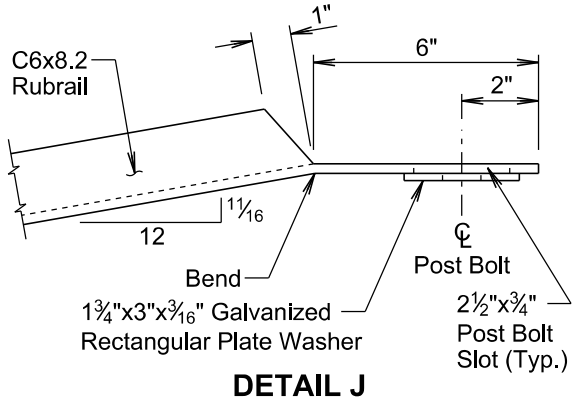

DETAIL J
(Post, Blockout, Post Bolt, and Rail Not Shown)

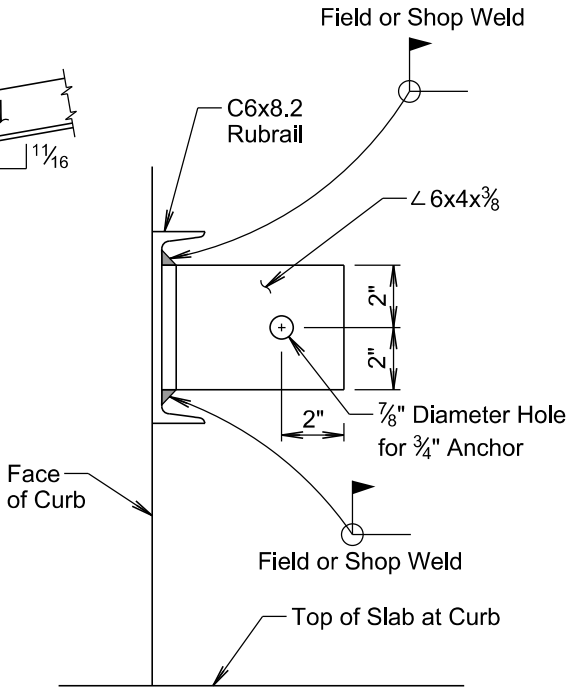

VIEW H-H
(Anchor and Rail Not Shown)

GENERAL NOTES:

Throughout the type 10 guardrail transition, slots in the rails will be provided as specified in the plans and by the manufacturer. A drilled hole through the rail is not allowed as a replacement for a slot. If the Contractor must create a slot, a cutting torch or plasma cutter is not allowed. The slot edges will be smooth and free of burrs or notches.

The rubrail steel will be in conformance with ASTM A36 and will be galvanized after fabrication in conformance with ASTM A123. If pre-galvanized steel members are used, all cuts and welds will be coated with an approved galvanizing paint.

The wedge type anchor bolt, nut, and washers will be hot dipped galvanized or made of a corrosion resistent material. The wedge type anchor will be capable of sustaining an ultimate load in tension or shear of 17,000 pounds when the anchor is set in 4,500 psi compressive strength concrete. The anchor will be installed according to the manufacturer's recommendations. The Contractor will obtain certification from the manufacturer that the anchor meets the tensile and shear requirements and will submit the certification to the Engineer. The cost for furnishing and installing the wedge type anchor, nut, and washers will be incidental to the contract unit price per foot for "Rubrail".

All costs for furnishing and installing the straight double class B W beam guardrail including labor, equipment, and materials including the W beam rails, posts, blockouts, W beam terminal connector, and hardware will be incidental to the contract unit price per foot for "Straight Double Class B W Beam Guardrail with Wood Posts".

All costs for furnishing and installing the type 10 guardrail transition including labor, equipment, and materials will be included in the contract unit price for the respective guardrail contract items.

September 14, 2019

Published Date: 2nd Qtr. 2021	SDDOT	*TYPE 10 GUARDRAIL TRANSITION (CONCRETE END BLOCK TO W BEAM GUARDRAIL)*	PLATE NUMBER 630.60 Sheet 3 of 3

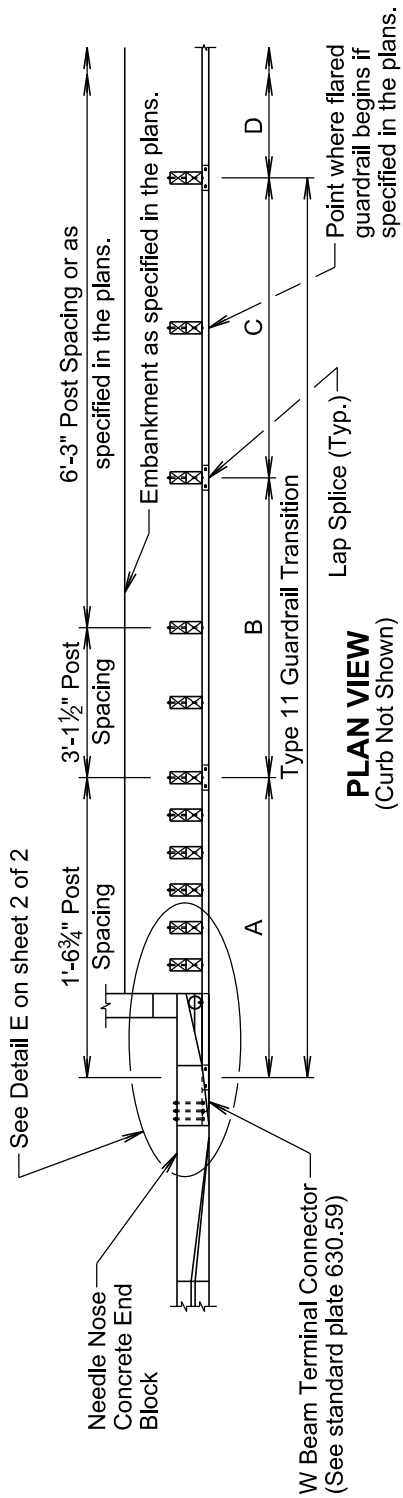

PLAN VIEW
(Curb Not Shown)

A: 12'-6" Straight Double (Nested) Class B W Beam Guardrail with Wood Posts (See standard plate 630.10)
B: 12'-6" Straight Class B W Beam Guardrail with Wood Posts (See standard plate 630.10)
C: 12'-6" Straight Class A W Beam Guardrail with Wood Posts (See standard plate 630.10) or as specified in the plans.
D: Guardrail as specified in the plans.

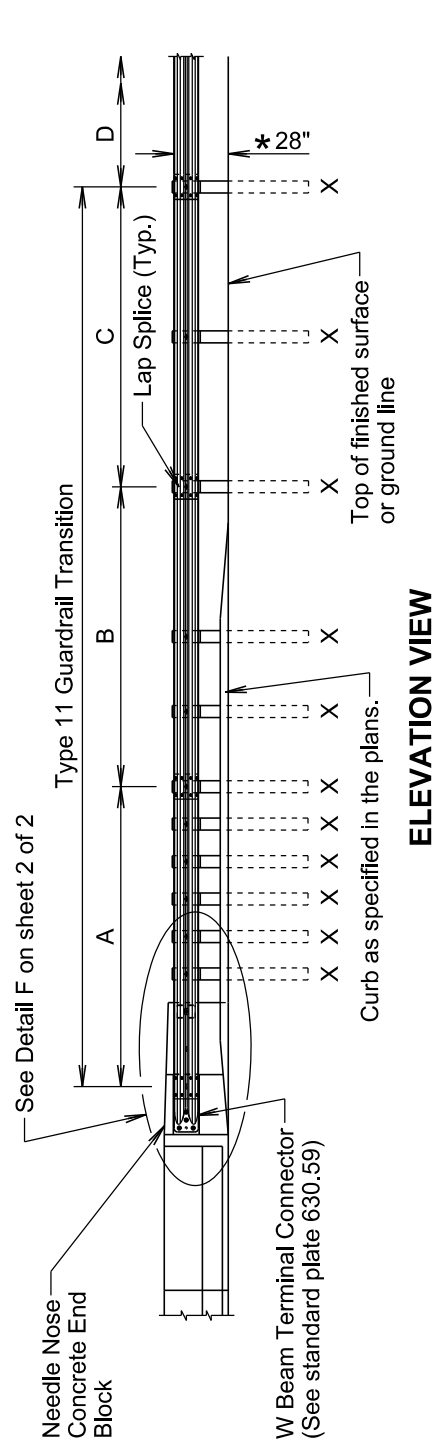

ELEVATION VIEW

* See standard plate 630.99

X: 6"x8"x6'-0" Wood Post and 6"x8"x14" Wood Blockout

September 14, 2019

Published Date: 2nd Qtr. 2021	SDDOT	TYPE 11 GUARDRAIL TRANSITION (NEEDLE NOSE CONCRETE END BLOCK TO W BEAM GUARDRAIL)	PLATE NUMBER 630.61 Sheet 1 of 2

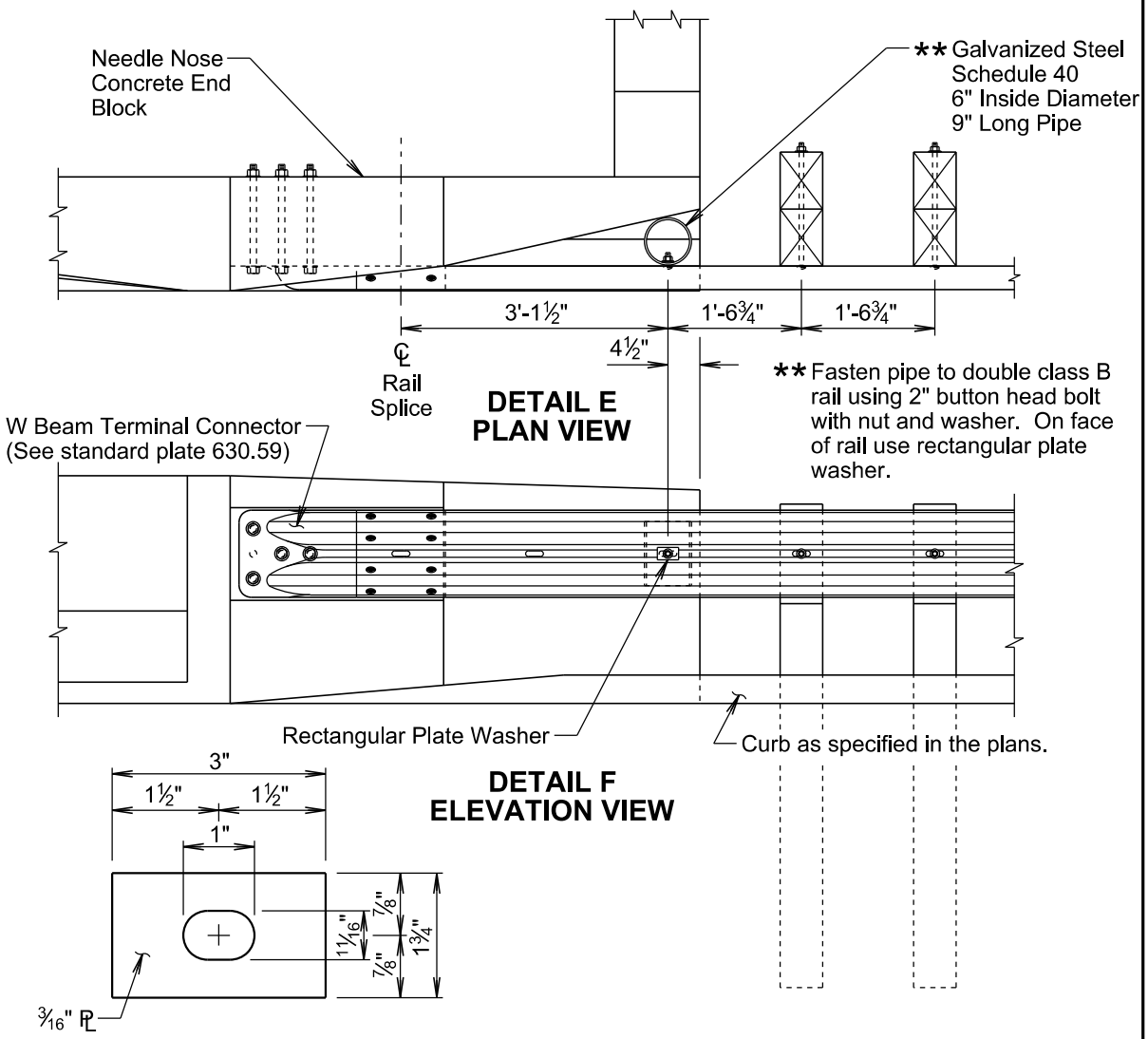

RECTANGULAR PLATE WASHER

GENERAL NOTES:

Throughout the type 11 guardrail transition, slots in the rails will be provided as specified in the plans and by the manufacturer. A drilled hole through the rail is not allowed as a replacement for a slot. If the Contractor must create a slot, a cutting torch or plasma cutter is not allowed. The slot edges will be smooth and free of burrs or notches.

All costs for furnishing and installing the straight double class B W beam guardrail including labor, equipment, and materials including the W beam rails, posts, blockouts, W beam terminal connector, steel pipe, and hardware will be incidental to the contract unit price per foot for "Straight Double Class B W Beam Guardrail with Wood Posts".

All costs for furnishing and installing the type 11 guardrail transition including labor, equipment, and materials will be included in the contract unit price for the respective guardrail contract items.

September 14, 2019

Published Date: 2nd Qtr. 2021	SDDOT	TYPE 11 GUARDRAIL TRANSITION (NEEDLE NOSE CONCRETE END BLOCK TO W BEAM GUARDRAIL)	PLATE NUMBER 630.61 Sheet 2 of 2

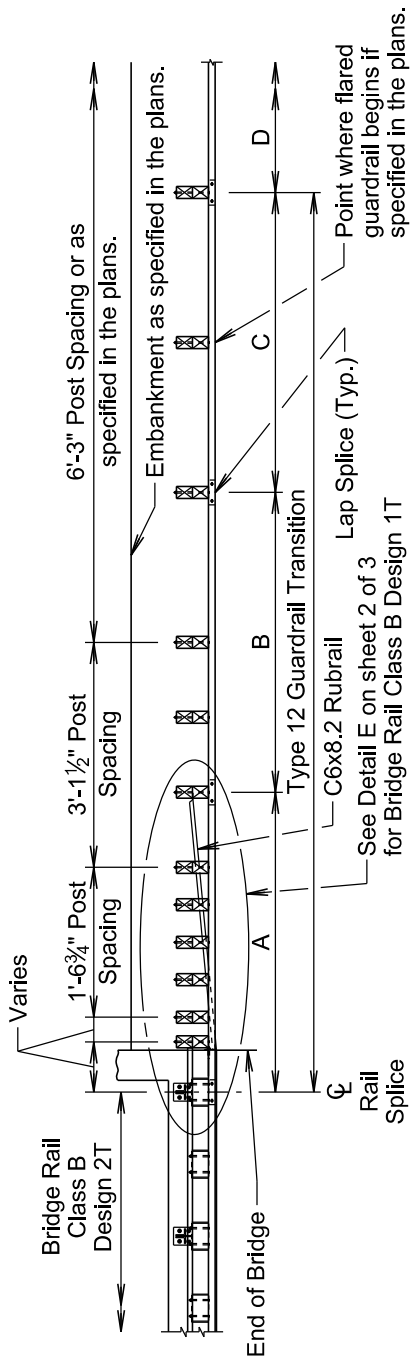

PLAN VIEW

A: 12'-6" Straight Double (Nested) Class B W Beam Guardrail with Wood Posts (See standard plate 630.10)
B: 12'-6" Straight Class B W Beam Guardrail with Wood Posts (See standard plate 630.10)
C: 12'-6" Straight Class A W Beam Guardrail with Wood Posts (See standard plate 630.10) or as specified in the plans.
D: Guardrail as specified in the plans.

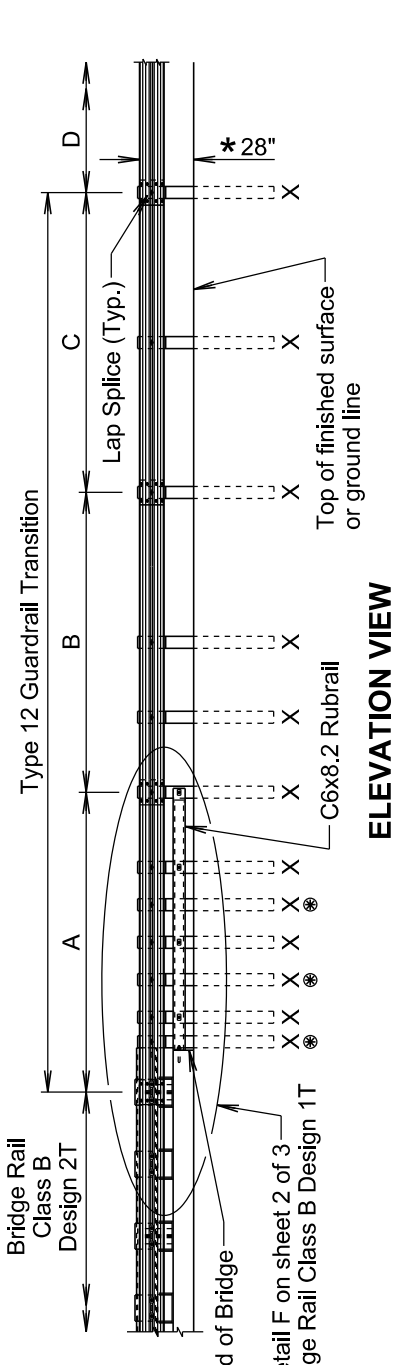

ELEVATION VIEW

* See standard plate 630.99

X: 6"x8"x6'-0" Wood Post and 6"x8"x14" Wood Blockout
❀ Rubrail will not be attached to these posts.

September 14, 2019

Published Date: 2nd Qtr. 2021	SDDOT	TYPE 12 GUARDRAIL TRANSITION (W BEAM BRIDGE RAIL CLASS B DESIGN 1T OR 2T TO W BEAM GUARDRAIL)	PLATE NUMBER 630.63 Sheet 1 of 3

GUARDRAIL REPAIR

BEADLE, BROOKINGS, BROWN, BUFFALO, CLARK, CODINGTON, DAY, DEUEL, EDMUNDS, FAULK, GRANT, HAMLIN, HAND, HYDE, KINGSBURY, MCPHERSON, MARSHALL, MOODY, ROBERTS, AND SPINK COUNTIES

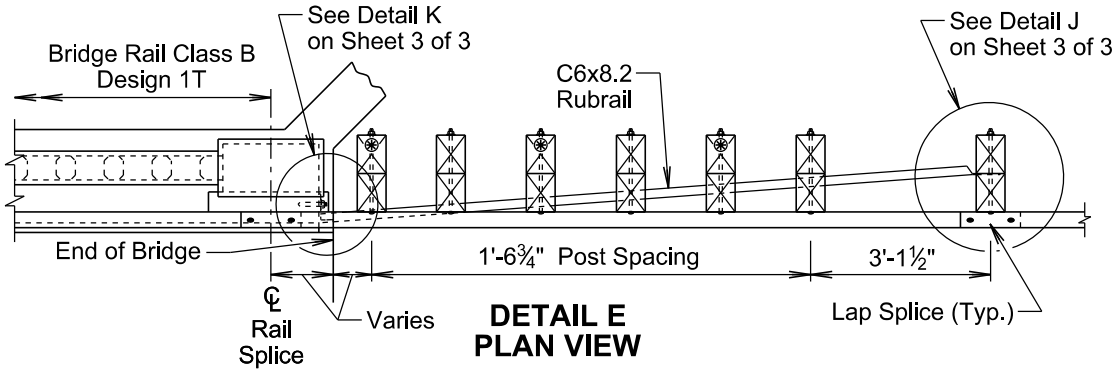

DETAIL E
PLAN VIEW

⊛ Rubrail will not be attached to these posts.

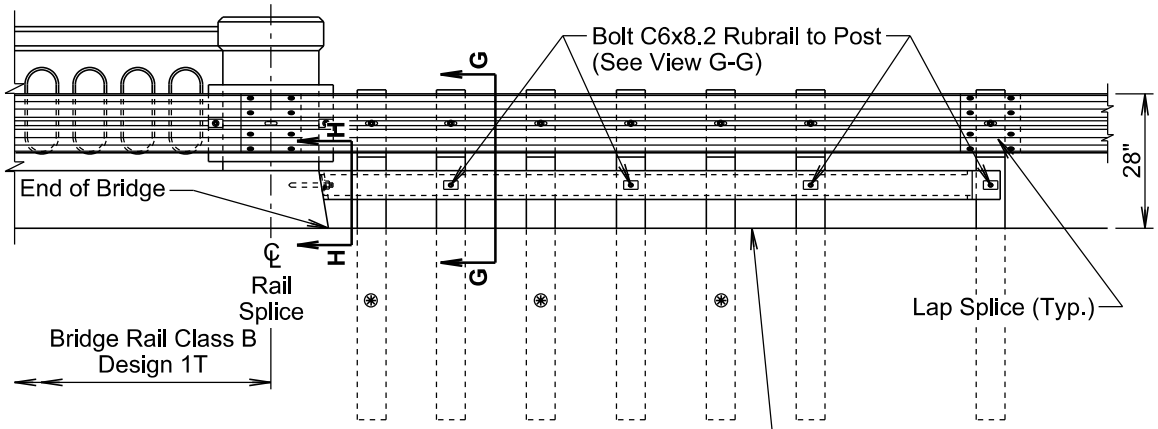

DETAIL F
ELEVATION VIEW

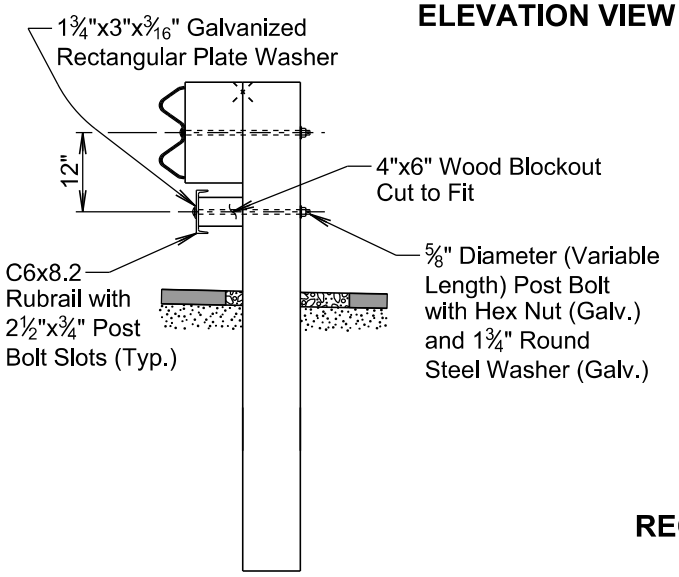

VIEW G-G
(For Bridge Rail Class B Design 1T or 2T)

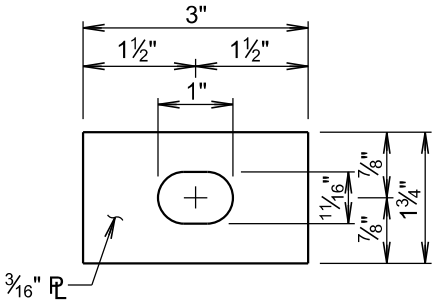

RECTANGULAR PLATE WASHER

September 14, 2019

Published Date: 2nd Qtr. 2021	SDDOT	*TYPE 12 GUARDRAIL TRANSITION (W BEAM BRIDGE RAIL CLASS B DESIGN 1T OR 2T TO W BEAM GUARDRAIL)*	PLATE NUMBER 630.63 Sheet 2 of 3

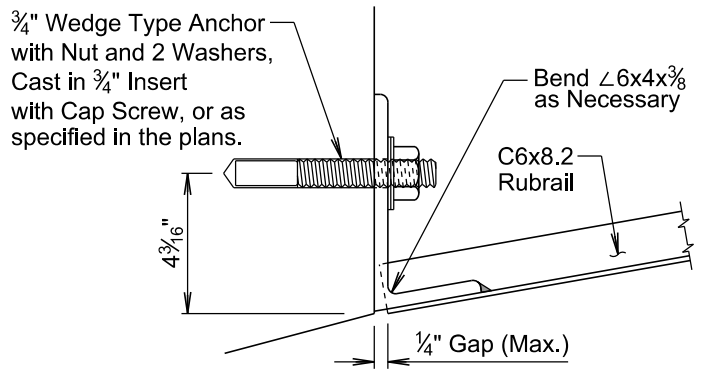

DETAIL K
(Double Class B Rail Not Shown)
(For Bridge Rail Class B Design 1T or 2T)

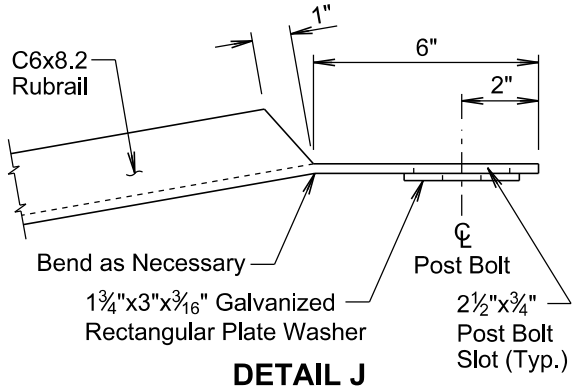

DETAIL J
(Post, Blockout, Post Bolt, and Rail Not Shown)
(For Bridge Rail Class B Design 1T or 2T)

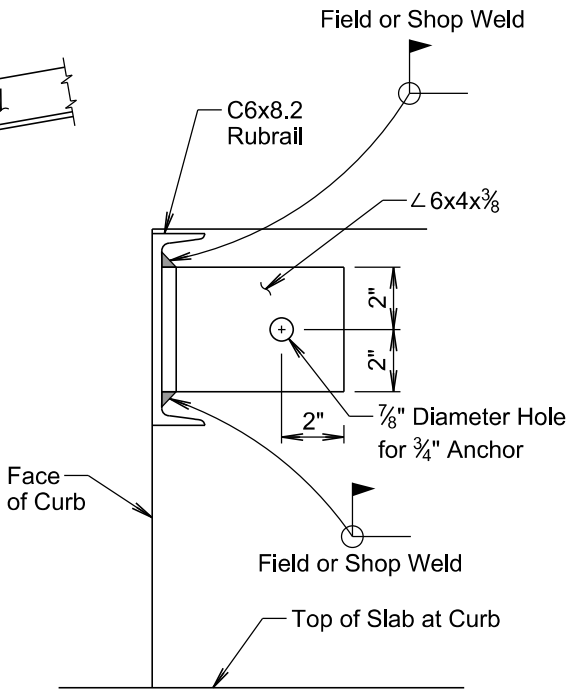

VIEW H-H
(Anchor and Rail Not Shown)
(For Bridge Rail Class B Design 1T or 2T)

GENERAL NOTES:

Throughout the type 12 guardrail transition, slots in the rails will be provided as specified in the plans and by the manufacturer. A drilled hole through the rail is not allowed as a replacement for a slot. If the Contractor must create a slot, a cutting torch or plasma cutter is not allowed. The slot edges will be smooth and free of burrs or notches.

The rubrail steel will be in conformance with ASTM A36 and will be galvanized after fabrication in conformance with ASTM A123. If pre-galvanized steel members are used, all cuts and welds will be coated with an approved galvanizing paint.

The wedge type anchor bolt, nut, and washers will be hot dipped galvanized or made of a corrosion resistent material. The wedge type anchor will be capable of sustaining an ultimate load in tension or shear of 17,000 pounds when the anchor is set in 4,500 psi compressive strength concrete. The anchor will be installed according to the manufacturer's recommendations. The Contractor will obtain certification from the manufacturer that the anchor meets the tensile and shear requirements and will submit the certification to the Engineer. The cost for furnishing and installing the wedge type anchor, nut, and washers will be incidental to the contract unit price per foot for "Rubrail".

All costs for furnishing and installing the straight double class B W beam guardrail including labor, equipment, and materials including the W beam rails, posts, blockouts, W beam terminal connector, and hardware will be incidental to the contract unit price per foot for "Straight Double Class B W Beam Guardrail with Wood Posts".

All costs for furnishing and installing the type 12 guardrail transition including labor, equipment, and materials will be included in the contract unit price for the respective guardrail contract items.

September 14, 2019

Published Date: 2nd Qtr. 2021	SDDOT	*TYPE 12 GUARDRAIL TRANSITION (W BEAM BRIDGE RAIL CLASS B DESIGN 1T OR 2T TO W BEAM GUARDRAIL)*	PLATE NUMBER 630.63 Sheet 3 of 3

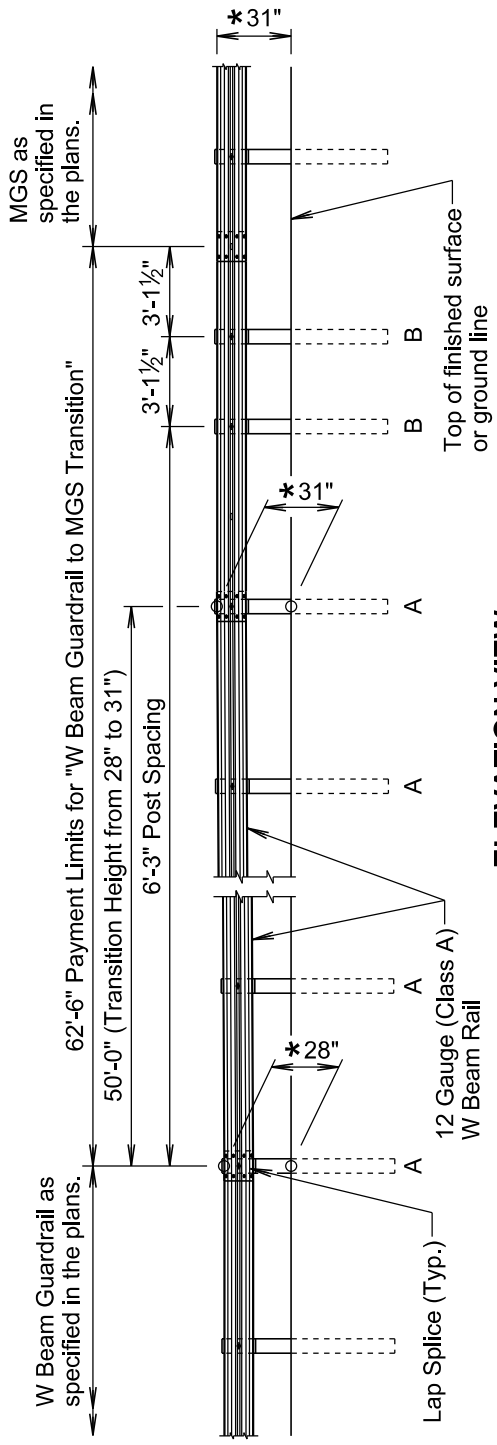

ELEVATION VIEW

A: 6"x8"x 6'-0" Wood Post and 6"x8"x14" Wood Blockout (See standard plate 630.10)
B: 6"x8"x 6'-0" Wood Post and 6"x12"x14" Wood Blockout (See standard plate 630.20)

* See standard plate 630.99

GENERAL NOTES:

All costs for furnishing and installing the W beam guardrail to MGS transition including labor, equipment, and materials which includes all rail sections, posts and blockouts, hardware, and incidentals will be included in the contract unit price per each for "W Beam Guardrail to MGS Transition".

September 14, 2019

Published Date: 2nd Qtr. 2021	SDDOT	W BEAM GUARDRAIL TO MGS (MIDWEST GUARDRAIL SYSTEM) TRANSITION	PLATE NUMBER 630.64 Sheet 1 of 1

GUARDRAIL REPAIR

BEADLE, BROOKINGS, BROWN, BUFFALO, CLARK, CODINGTON, DAY, DEUEL, EDMUNDS, FAULK, GRANT, HAMLIN, HAND, HYDE, KINGSBURY, MCPHERSON, MARSHALL, MOODY, ROBERTS, AND SPINK COUNTIES

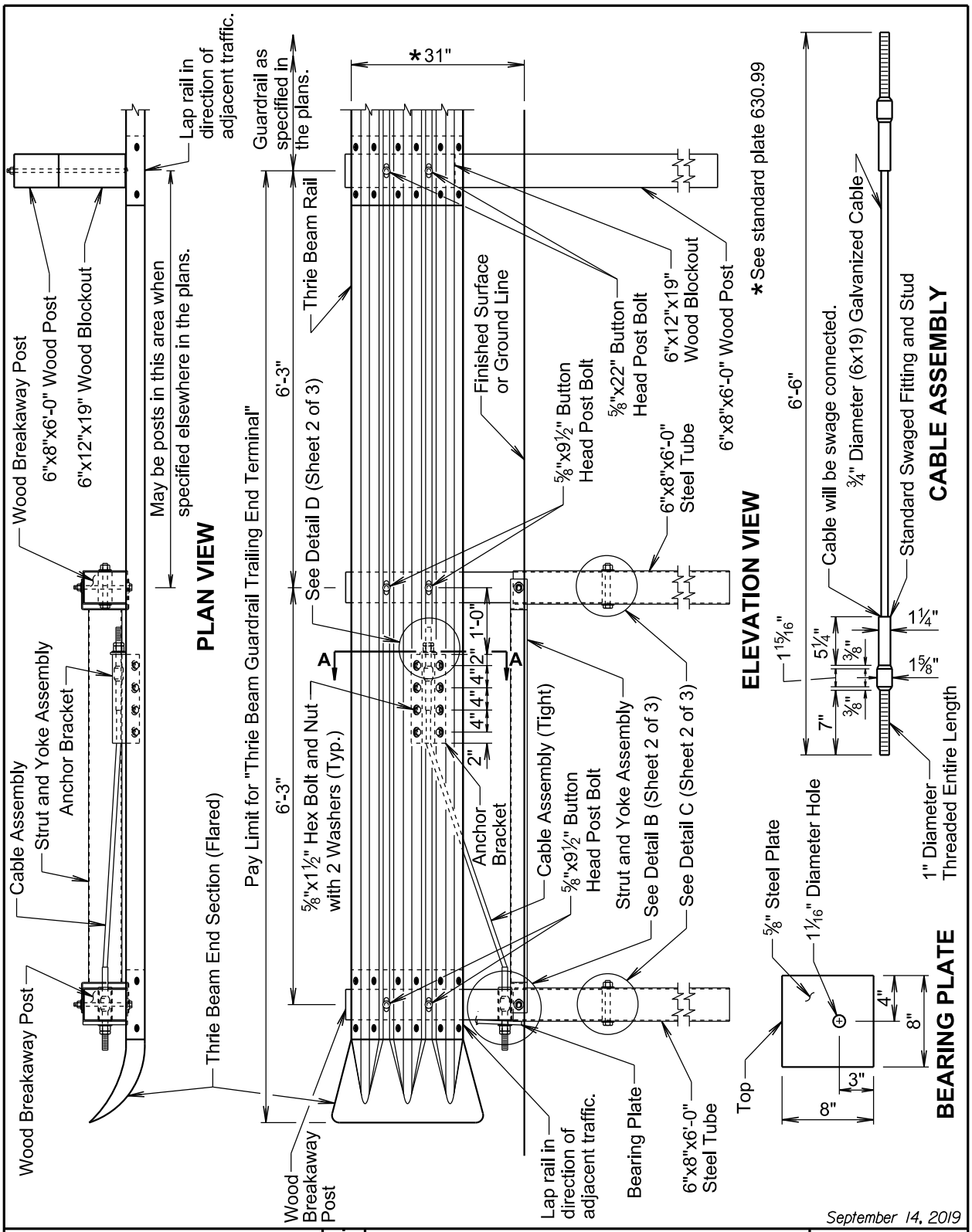

Published Date: 2nd Qtr. 2021	SDDOT	THRIE BEAM GUARDRAIL TRAILING END TERMINAL	PLATE NUMBER 630.80 Sheet 1 of 3

GUARDRAIL REPAIR

BEADLE, BROOKINGS, BROWN, BUFFALO, CLARK, CODINGTON, DAY, DEUEL, EDMUNDS, FAULK, GRANT, HAMLIN, HAND, HYDE, KINGSBURY, MCPHERSON, MARSHALL, MOODY, ROBERTS, AND SPINK COUNTIES

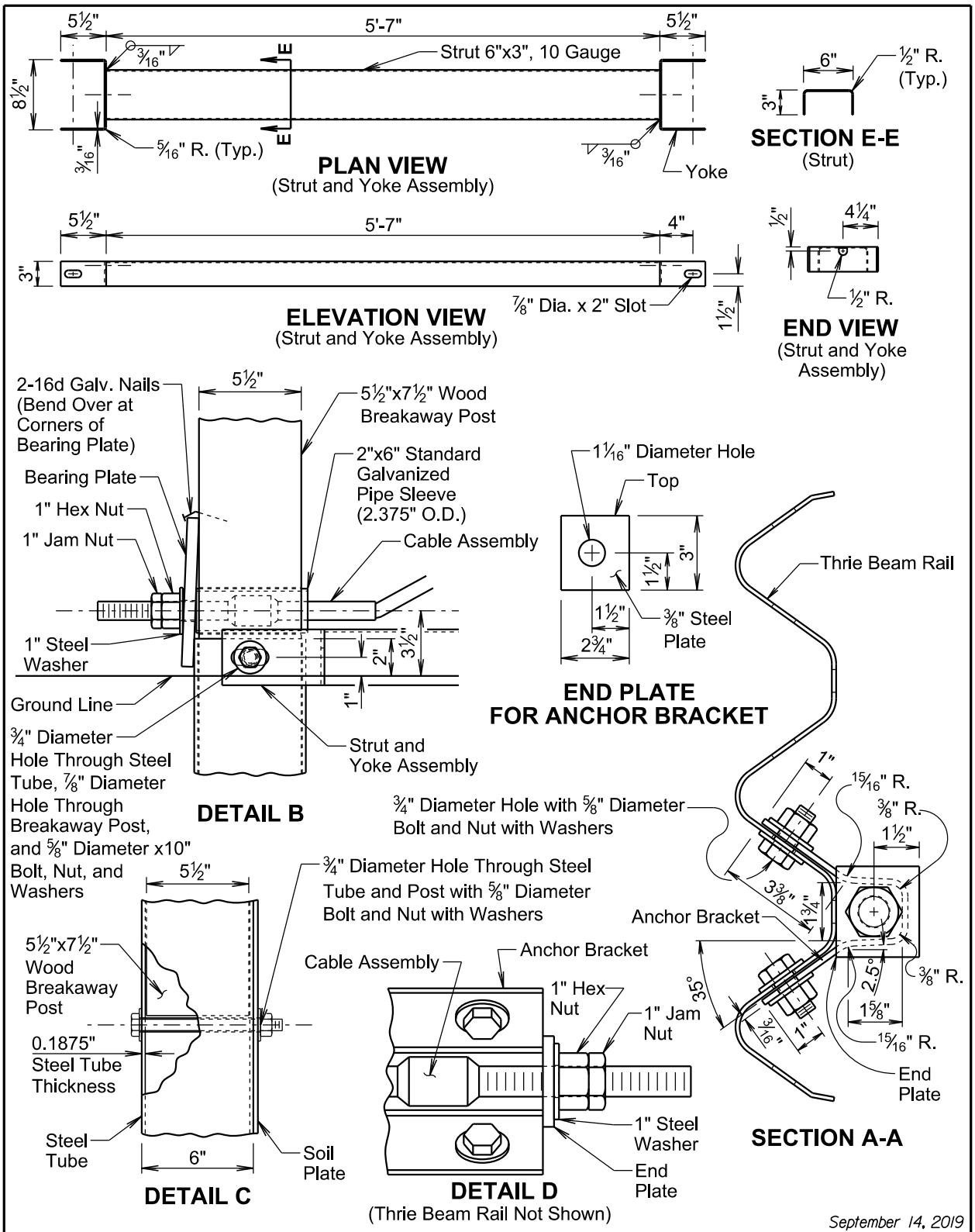

Published Date: 2nd Qtr. 2021	SDDOT	THRIE BEAM GUARDRAIL TRAILING END TERMINAL	PLATE NUMBER 630.80
			Sheet 2 of 3

GUARDRAIL REPAIR

BEADLE, BROOKINGS, BROWN, BUFFALO, CLARK, CODINGTON, DAY, DEUEL, EDMUNDS, FAULK, GRANT, HAMLIN, HAND, HYDE, KINGSBURY, MCPHERSON, MARSHALL, MOODY, ROBERTS, AND SPINK COUNTIES

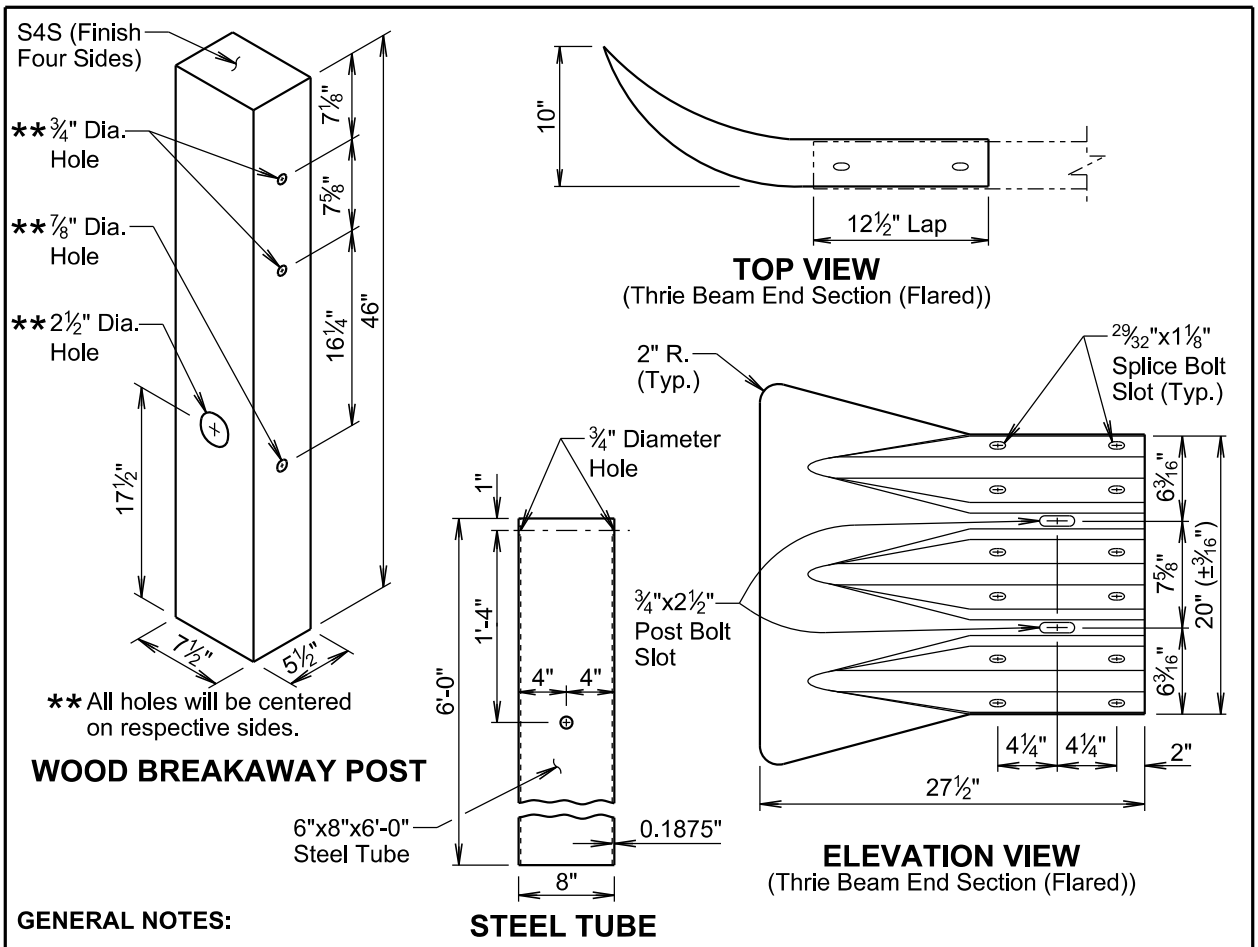

GENERAL NOTES:

The thrie beam guardrail trailing end terminal will only be used in a one-way traffic situation on the downstream traffic flow end.

Thrie beam end sections (flared) will be 12 gauge.

The cable will be ¾", Type II, with Class A coating in conformance with AASHTO M30.

The steel tube will meet the requirements of ASTM A500, Grade B, and will be galvanized after fabrication in accordance with the requirements of AASHTO M111.

All hardware will be galvanized in accordance with ASTM A153.

The anchor bracket, soil plate, and bearing plate will be fabricated from steel that meets ASTM A36 Specifications. They will be galvanized after fabrication in accordance with ASTM A123.

Slots in the rails will be provided as specified in the plans and by the manufacturer. A drilled hole through the rail is not allowed as a replacement for a slot. If the Contractor must create a slot, a cutting torch or plasma cutter is not allowed. The slot edges will be smooth and free of burrs or notches.

All costs for furnishing and constructing the thrie beam guardrail trailing end terminal including labor, equipment, materials which includes thrie beam rail section, all posts and blockouts, wood breakaway posts, steel tubes, cable assembly, bearing plate, anchor bracket, strut and yoke assembly, thrie beam end section (flared), hardware, and incidentals will be included in the contract unit price per each for "Thrie Beam Guardrail Trailing End Terminal".

September 14, 2019

Published Date: 2nd Qtr. 2021	SDDOT	*THRIE BEAM GUARDRAIL TRAILING END TERMINAL*	*PLATE NUMBER* 630.80
			Sheet 3 of 3

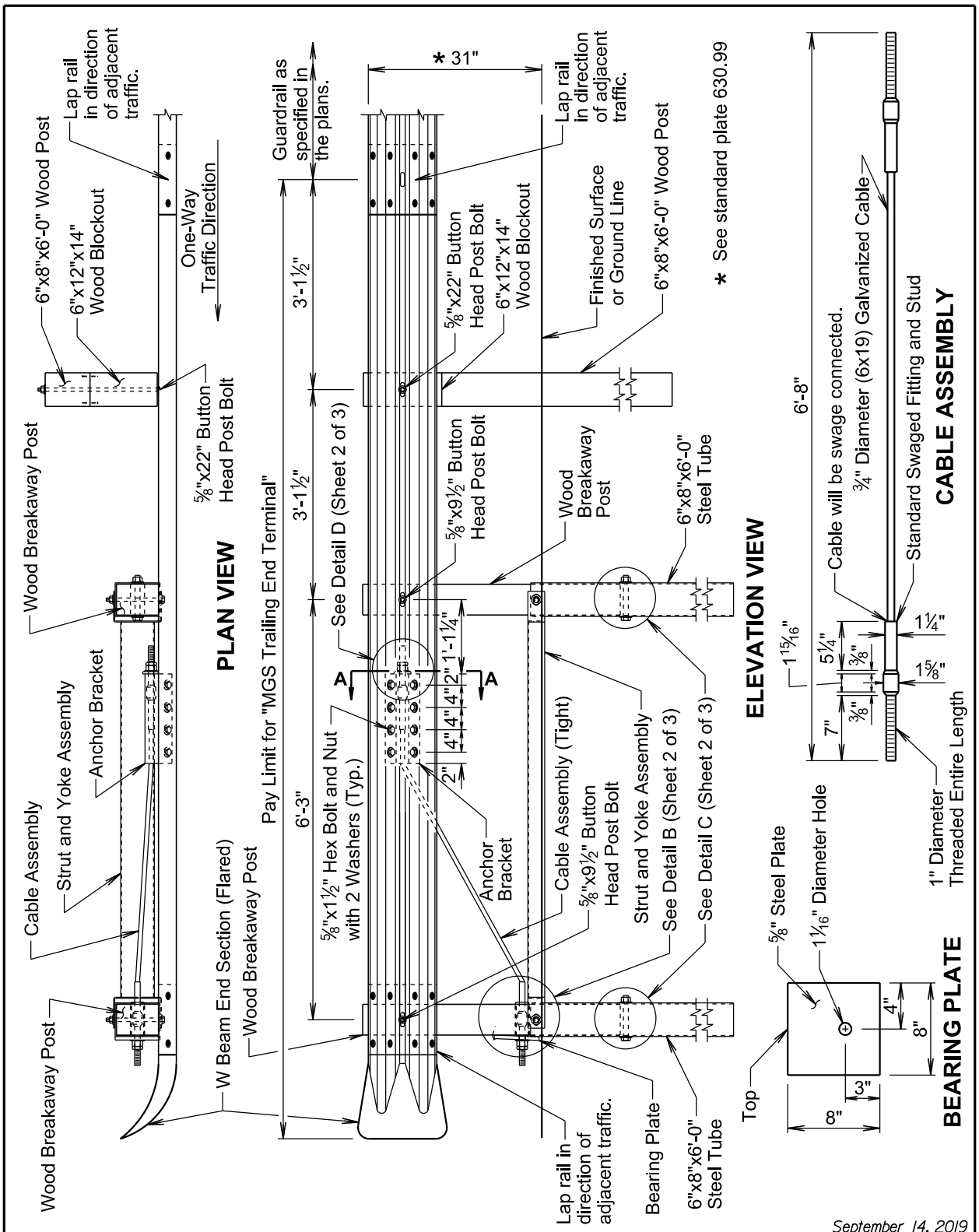

Published Date: 2nd Qtr. 2021	SDDOT	MIDWEST GUARDRAIL SYSTEM (MGS) TRAILING END TERMINAL	PLATE NUMBER 630.82 Sheet 1 of 3

GUARDRAIL REPAIR

BEADLE, BROOKINGS, BROWN, BUFFALO, CLARK, CODINGTON, DAY, DEUEL, EDMUNDS, FAULK, GRANT, HAMLIN, HAND, HYDE, KINGSBURY, MCPHERSON, MARSHALL, MOODY, ROBERTS, AND SPINK COUNTIES

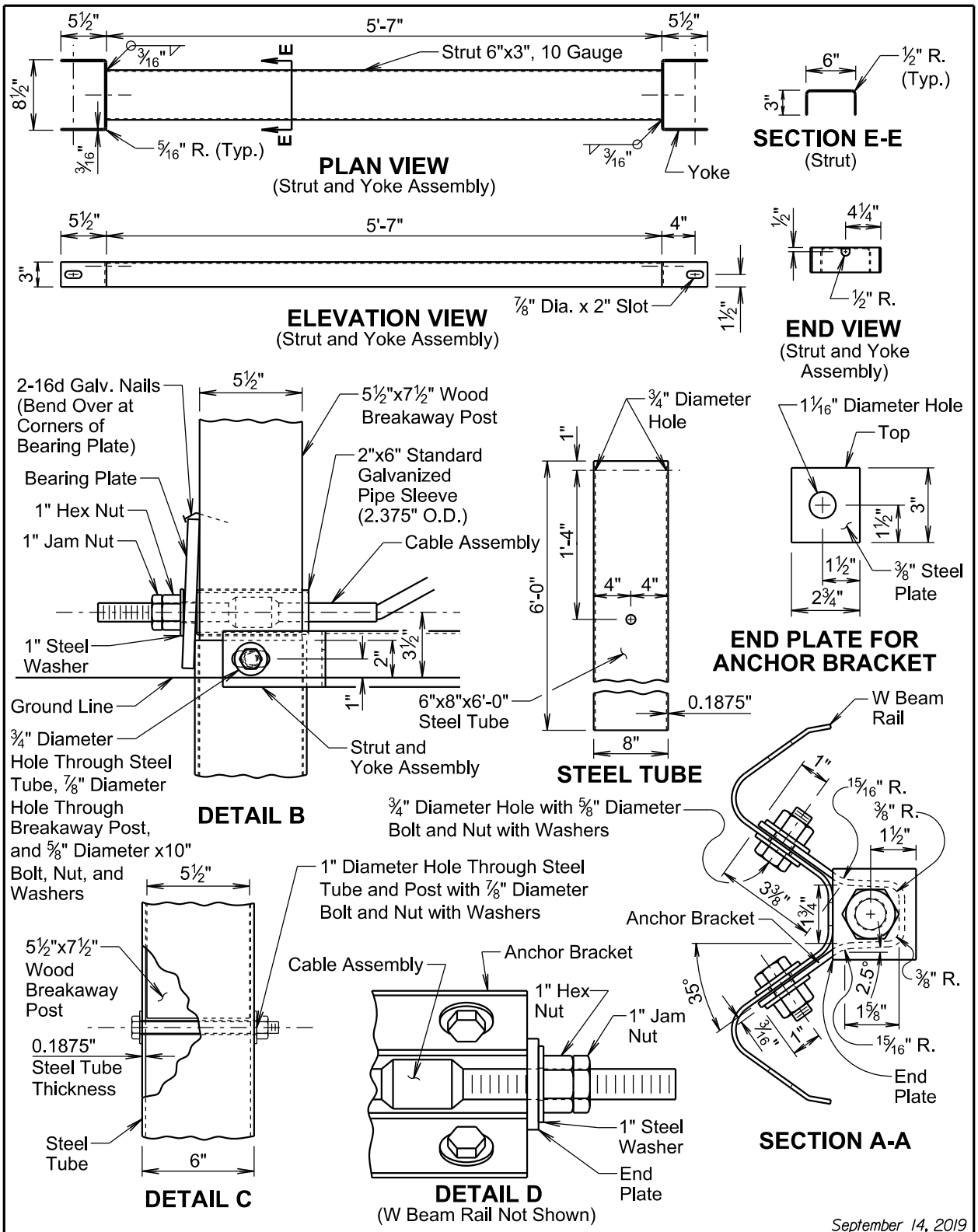

Published Date: 2nd Qtr. 2021	SDDOT	MIDWEST GUARDRAIL SYSTEM (MGS) TRAILING END TERMINAL	PLATE NUMBER 630.82 Sheet 2 of 3

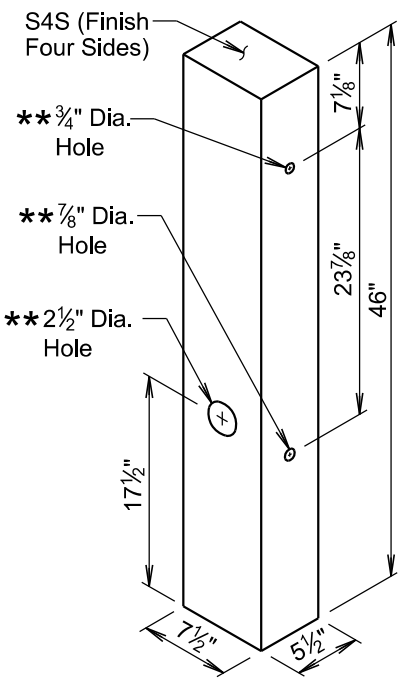

** All holes will be centered on respective sides.

WOOD BREAKAWAY POST

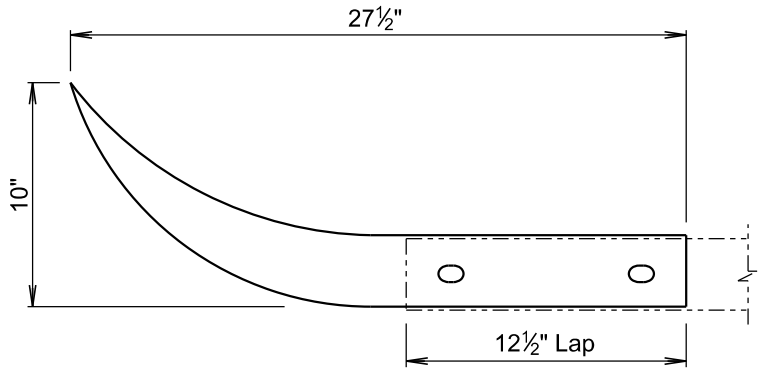

PLAN VIEW
(W Beam End Section (Flared))

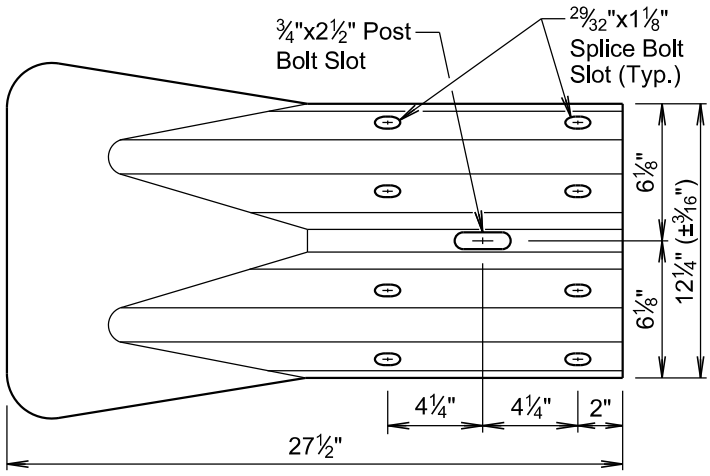

ELEVATION VIEW
(W Beam End Section (Flared))

GENERAL NOTES:

The MGS trailing end terminal will only be used in a one-way traffic situation on the downstream traffic flow end.

W beam end section (flared) will be 12 gauge.

The cable will be ¾", Type II, with Class A coating in conformance with AASHTO M30.

The steel tube will meet the requirements of ASTM A500, Grade B, and will be galvanized after fabrication in accordance with the requirements of AASHTO M111.

All hardware will be galvanized in accordance with ASTM A153.

The anchor bracket, strut and yoke assembly, and bearing plate will be fabricated from steel that meets ASTM A36 Specifications. They will be galvanized after fabrication in accordance with ASTM A123.

Slots in the rails will be provided as specified in the plans and by the manufacturer. A drilled hole through the rail is not allowed as a replacement for a slot. If the Contractor must create a slot, a cutting torch or plasma cutter is not allowed. The slot edges will be smooth and free of burrs or notches.

All costs for furnishing and constructing the MGS trailing end terminal including labor, equipment, materials which includes W beam rail section, two wood breakaway posts, steel tubes, strut and yoke assembly, cable assembly, bearing plate, anchor bracket, W beam end section (flared), one MGS wood post and blockout, hardware, and incidentals will be included in the contract unit price per each for "MGS Trailing End Terminal".

September 14, 2019

Published Date: 2nd Qtr. 2021	SDDOT	*MIDWEST GUARDRAIL SYSTEM (MGS) TRAILING END TERMINAL*	PLATE NUMBER 630.82 Sheet 3 of 3

GENERAL NOTES:

Washers will NOT be used on the face of the rail under the ⅝" button head bolts connecting the rail to the Controlled Releasing Terminal (CRT) posts.

** The rail will NOT be bolted to the CRT post at the center of the 8' radius nose only.

The curved guardrail sections will be shop bent.

The W Beam Guardrail Special Anchor has NOT been tested as a crashworthy end treatment for approaching traffic on the intersecting roadway. Therefore, its use will be limited to farm and field entrances, driveways, or service roads.

RADIUS	NUMBER OF CRT POSTS	* NUMBER AND LENGTH OF CURVED RAILS	REQUIRED AREA FREE OF FIXED OBJECTS (L x W)
8'	5	1 @ 12.5'	25' x 15'
16'	7	1 @ 25'	30' x 15'
24'	9	1 @ 25' and 1 @ 12.5'	40' x 20'
32'	11	2 @ 25'	50' x 20'

* The number of rails is based on a 90° intersection.

⧄ See standard plate 630.99

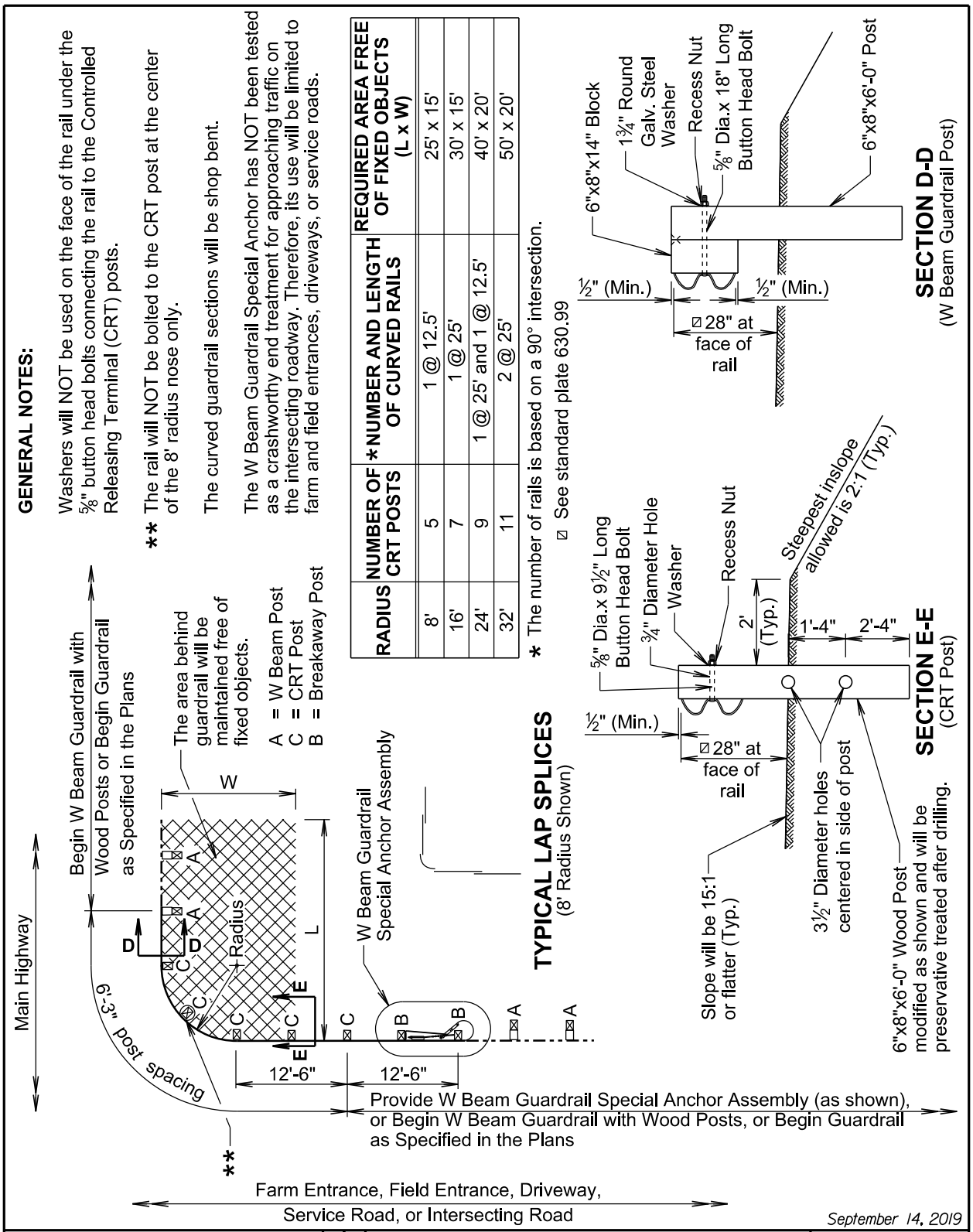

September 14, 2019

Published Date: 2nd Qtr. 2021	SDDOT	SHORT RADIUS W BEAM GUARDRAIL AND SPECIAL ANCHOR ASSEMBLY	PLATE NUMBER 630.84 Sheet 1 of 4

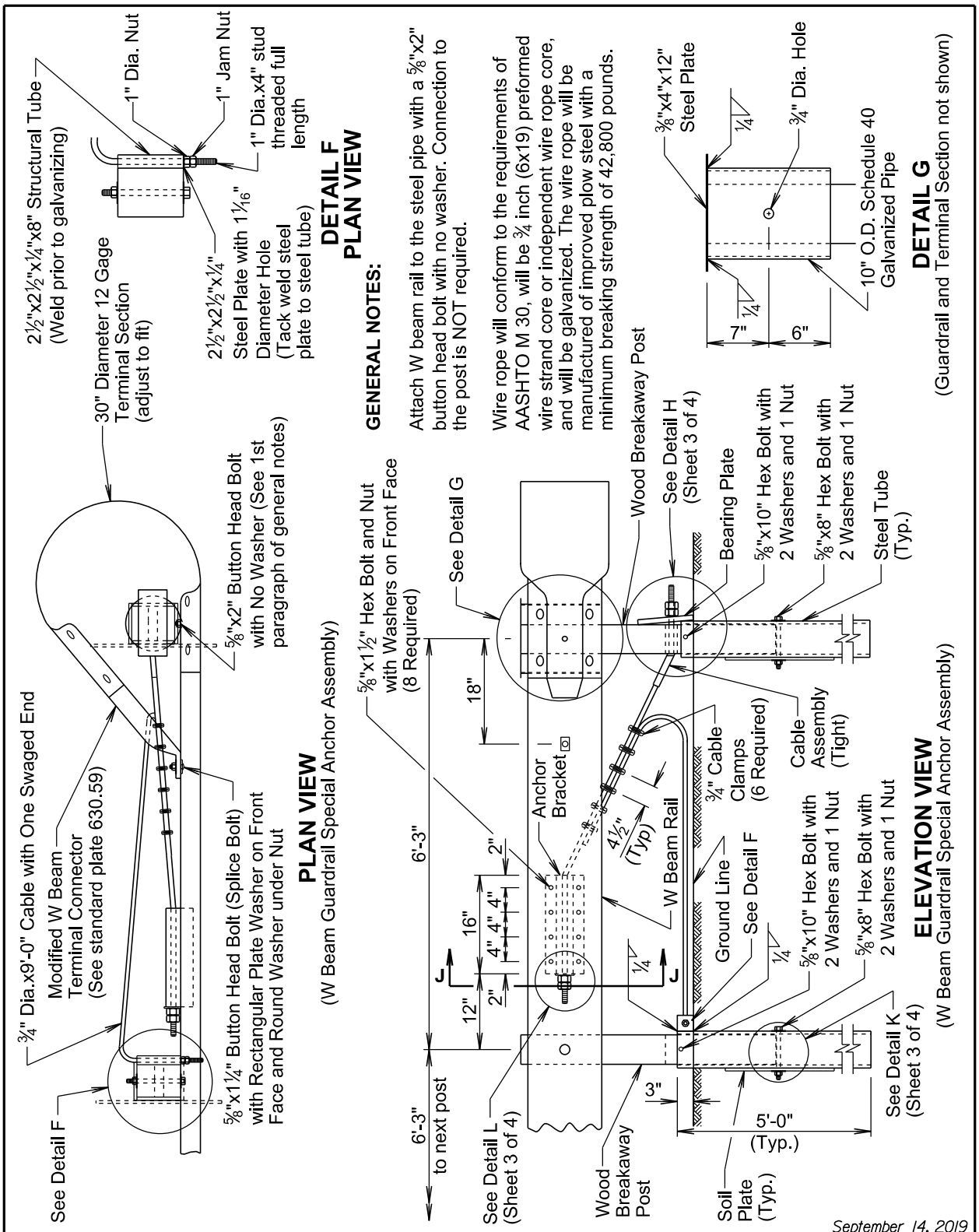
2½"x2½"x¼"x8" Structural Tube (Weld prior to galvanizing)
1" Dia. Nut
1" Jam Nut
1" Dia.x4" stud threaded full length
2½"x2½"x¼" Steel Plate with 1 1/16" Diameter Hole (Tack weld steel plate to steel tube)
DETAIL F
PLAN VIEW
GENERAL NOTES:
Attach W beam rail to the steel pipe with a ⅝"x2" button head bolt with no washer. Connection to the post is NOT required.
Wire rope will conform to the requirements of AASHTO M 30, will be ¾ inch (6x19) preformed wire strand core or independent wire rope core, and will be galvanized. The wire rope will be manufactured of improved plow steel with a minimum breaking strength of 42,800 pounds.
⅜"x4"x12" Steel Plate
¾" Dia. Hole
10" O.D. Schedule 40 Galvanized Pipe
DETAIL G
(Guardrail and Terminal Section not shown)
30" Diameter 12 Gage Terminal Section (adjust to fit)
⅝"x2" Button Head Bolt with No Washer (See 1st paragraph of general notes)
¾" Dia.x9'-0" Cable with One Swaged End
Modified W Beam Terminal Connector (See standard plate 630.59)
⅝"x1¼" Button Head Bolt (Splice Bolt) with Rectangular Plate Washer on Front Face and Round Washer under Nut
See Detail F
PLAN VIEW
(W Beam Guardrail Special Anchor Assembly)
⅝"x1½" Hex Bolt and Nut with Washers on Front Face (8 Required)
See Detail G
Wood Breakaway Post
See Detail H (Sheet 3 of 4)
Bearing Plate
⅝"x10" Hex Bolt with 2 Washers and 1 Nut
⅝"x8" Hex Bolt with 2 Washers and 1 Nut
Steel Tube (Typ.)
Cable Assembly (Tight)
¾" Cable Clamps (6 Required)
Anchor Bracket
4½" (Typ)
W Beam Rail
Ground Line
See Detail F
⅝"x10" Hex Bolt with 2 Washers and 1 Nut
⅝"x8" Hex Bolt with 2 Washers and 1 Nut
See Detail K (Sheet 3 of 4)
ELEVATION VIEW
(W Beam Guardrail Special Anchor Assembly)
6'-3"
18"
16"
4" 4" 4"
2"
12"
6'-3" to next post
See Detail L (Sheet 3 of 4)
Wood Breakaway Post
3"
5'-0" (Typ.)
Soil Plate (Typ.)
7"
6"
September 14, 2019
Published Date: 2nd Qtr. 2021
SDDOT
SHORT RADIUS W BEAM GUARDRAIL AND SPECIAL ANCHOR ASSEMBLY
PLATE NUMBER
630.84
Sheet 2 of 4

GUARDRAIL REPAIR

BEADLE, BROOKINGS, BROWN, BUFFALO, CLARK, CODINGTON, DAY, DEUEL, EDMUNDS, FAULK, GRANT, HAMLIN, HAND, HYDE, KINGSBURY, MCPHERSON, MARSHALL, MOODY, ROBERTS, AND SPINK COUNTIES

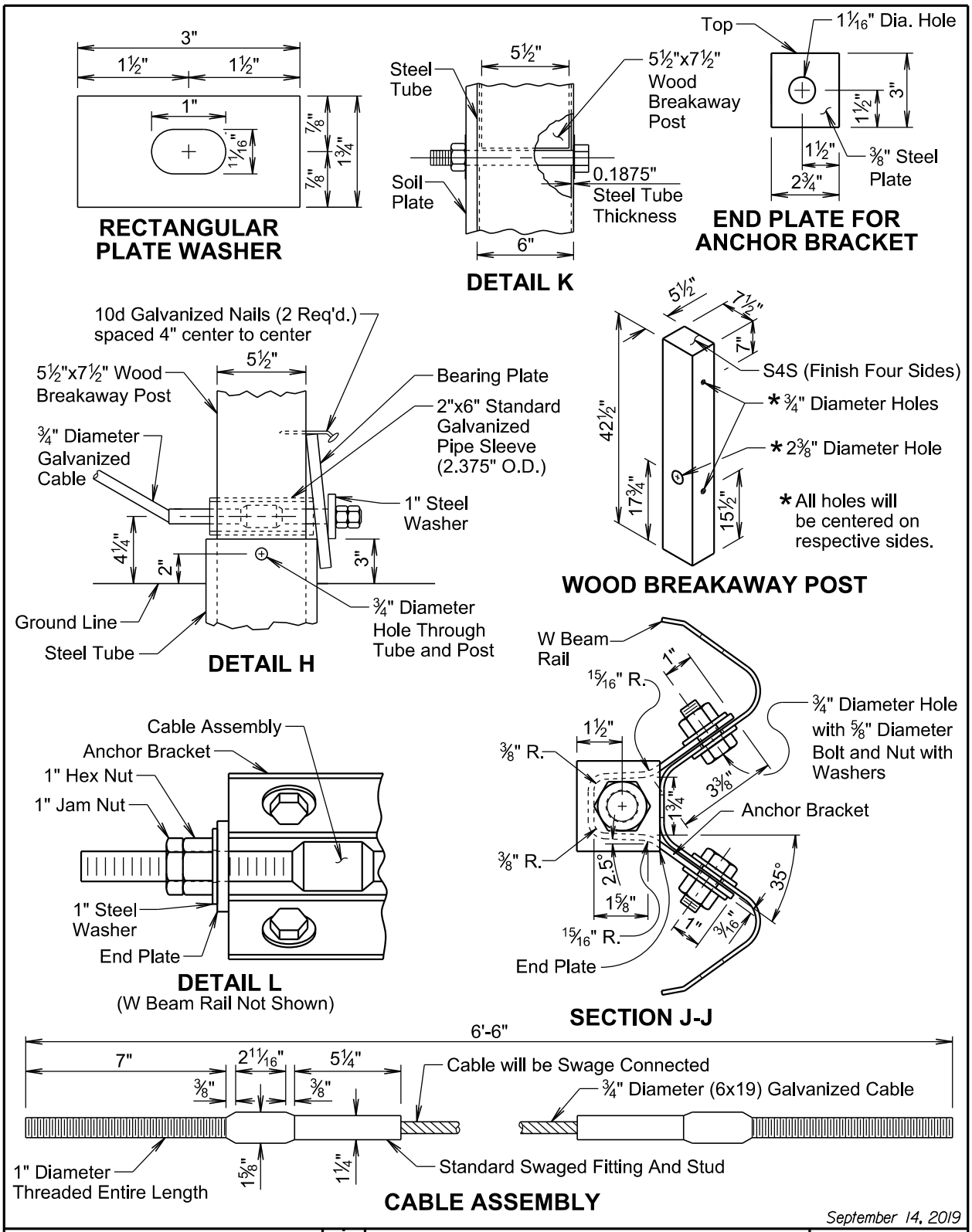

September 14, 2019

Published Date: 2nd Qtr. 2021	SDDOT	SHORT RADIUS W BEAM GUARDRAIL AND SPECIAL ANCHOR ASSEMBLY	PLATE NUMBER 630.84 Sheet 3 of 4

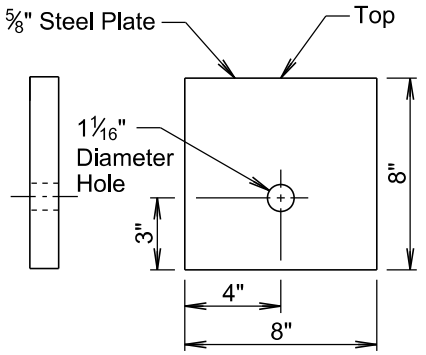

BEARING PLATE

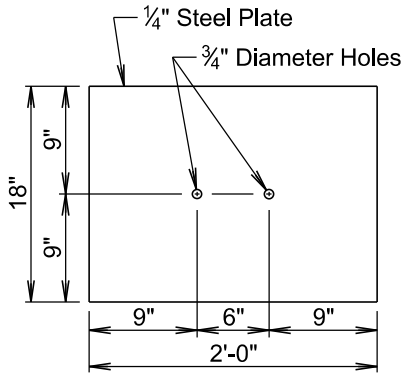

SOIL PLATE

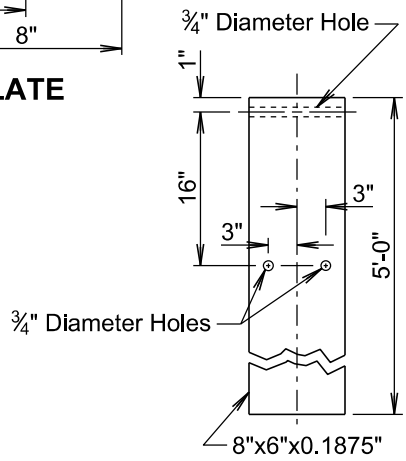

STEEL TUBE

GENERAL NOTES:

The wood breakaway post will be in conformance with Section 630.2 A of the Specifications.

The bolts will be in conformance with ASTM A307 and the nuts will be in conformance with ASTM A563, Grade A or better. The bolts and nuts will be galvanized in accordance with ASTM A153.

All angles, channels, and plates will conform to the requirements of ASTM A36 and the structural tubing will conform to ASTM A500. Welding will meet the current requirements of the Structural Welding Code AWS D1.1. All structural steel will be galvanized in accordance with ASTM A123. Punching, drilling, cutting, or welding will NOT be permitted after galvanizing.

Slots in the rails will be provided as specified in the plans and by the manufacturer. A drilled hole through the rail is not allowed as a replacement for a slot. If the Contractor must create a slot, a cutting torch or plasma cutter is not allowed. The slot edges will be smooth and free of burrs or notches.

All costs for constructing the straight W beam guardrail with CRT posts including labor, equipment, and materials including all posts, blocks, steel beam rail, and hardware will be incidental to the contract unit price per foot for "Straight Class A W Beam Guardrail with CRT Posts".

All costs for constructing the curved W beam guardrail with CRT posts including labor, equipment, and materials including all CRT posts, steel beam rail, and hardware will be incidental to the contract unit price per foot for "Curved Class A W Beam Guardrail with CRT Posts".

All costs for constructing the W beam guardrail special anchor assembly including labor, equipment, hardware, and all components of the W beam guardrail special anchor assembly except the W beam rail will be incidental to the contract unit price per each for "W Beam Guardrail Special Anchor Assembly". The 12'-6" length of W beam rail located within the W beam guardrail special anchor assembly will be paid for per foot with the contract item "Straight Class A W Beam Guardrail with Wood Posts".

September 14, 2019

Published Date: 2nd Qtr. 2021	SDDOT	SHORT RADIUS W BEAM GUARDRAIL AND SPECIAL ANCHOR ASSEMBLY	PLATE NUMBER 630.84 Sheet 4 of 4

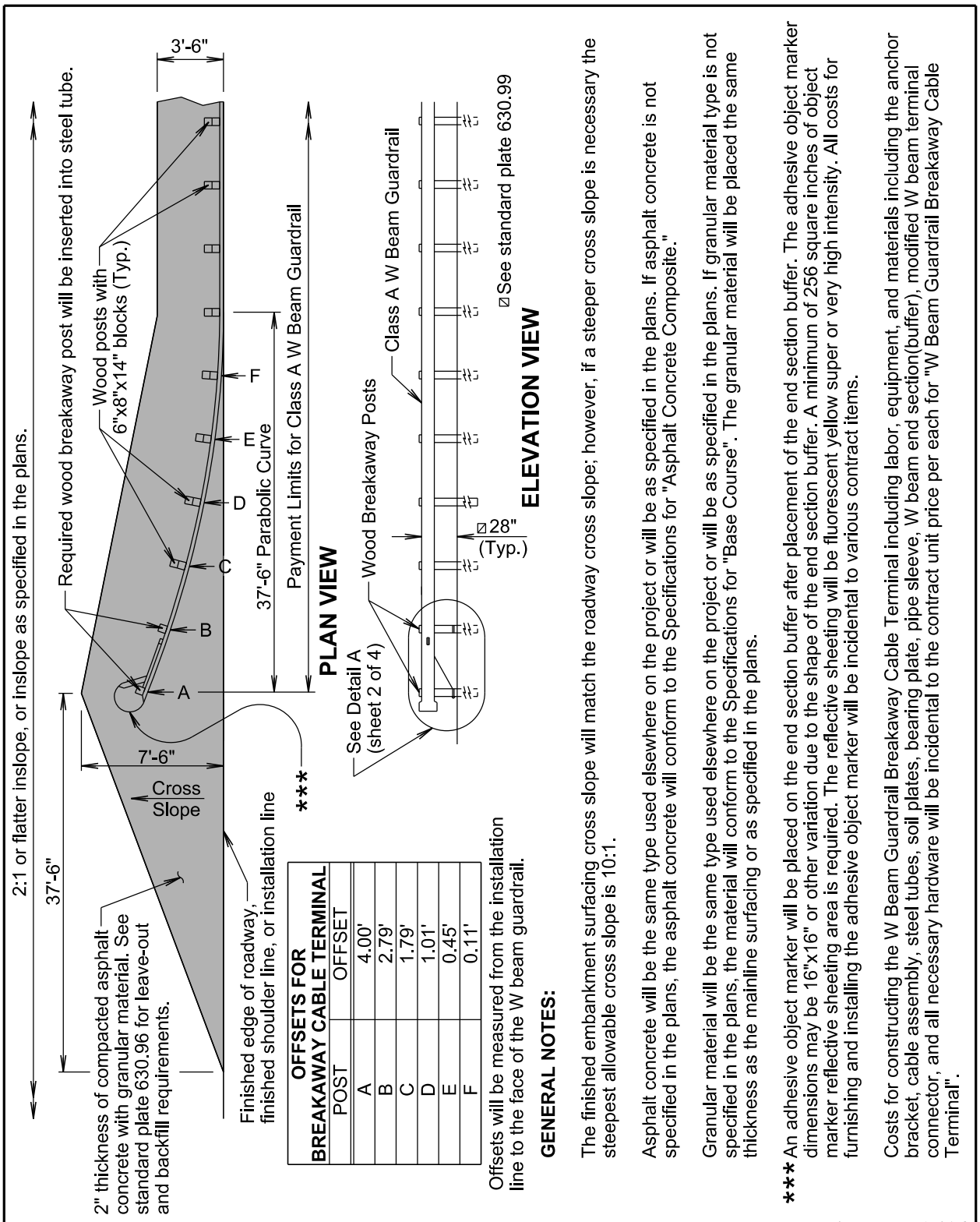

OFFSETS FOR BREAKAWAY CABLE TERMINAL

POST	OFFSET
A	4.00'
B	2.79'
C	1.79'
D	1.01'
E	0.45'
F	0.11'

Offsets will be measured from the installation line to the face of the W beam guardrail.

GENERAL NOTES:

The finished embankment surfacing cross slope will match the roadway cross slope; however, if a steeper cross slope is necessary the steepest allowable cross slope is 10:1.

Asphalt concrete will be the same type used elsewhere on the project or will be as specified in the plans. If asphalt concrete is not specified in the plans, the asphalt concrete will conform to the Specifications for "Asphalt Concrete Composite."

Granular material will be the same type used elsewhere on the project or will be as specified in the plans. If granular material type is not specified in the plans, the material will conform to the Specifications for "Base Course". The granular material will be placed the same thickness as the mainline surfacing or as specified in the plans.

*** An adhesive object marker will be placed on the end section buffer after placement of the end section buffer. The adhesive object marker dimensions may be 16"x16" or other variation due to the shape of the end section buffer. A minimum of 256 square inches of object marker reflective sheeting area is required. The reflective sheeting will be fluorescent yellow super or very high intensity. All costs for furnishing and installing the adhesive object marker will be incidental to various contract items.

Costs for constructing the W Beam Guardrail Breakaway Cable Terminal including labor, equipment, and materials including the anchor bracket, cable assembly, steel tubes, soil plates, bearing plate, pipe sleeve, W beam end section(buffer), modified W beam terminal connector, and all necessary hardware will be incidental to the contract unit price per each for "W Beam Guardrail Breakaway Cable Terminal".

September 14, 2019

Published Date: 2nd Qtr. 2021	SDDOT	W BEAM GUARDRAIL BREAKAWAY CABLE TERMINAL	PLATE NUMBER 630.85 Sheet 1 of 4

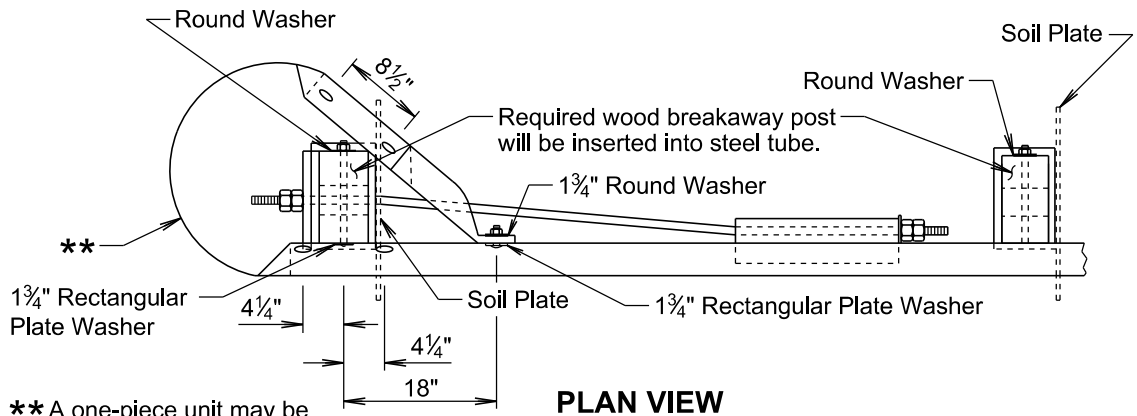

PLAN VIEW
DETAIL A

** A one-piece unit may be substituted for the W beam guardrail end section (buffer) and the modified W beam terminal connector.

⧄ See standard plate 630.99

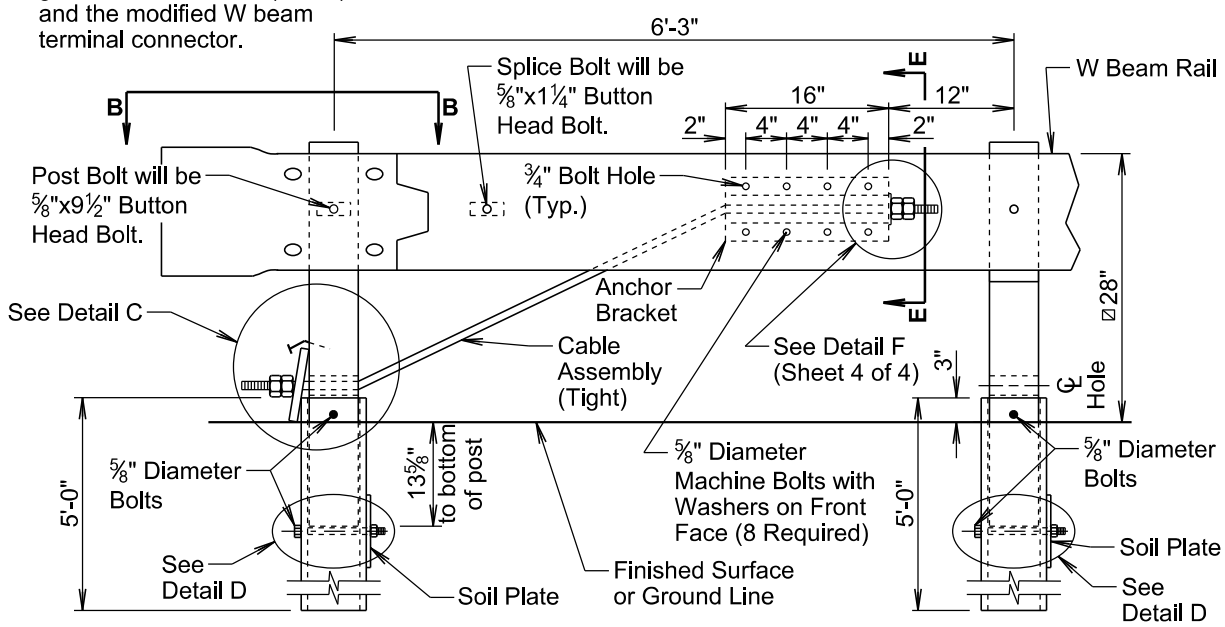

ELEVATION VIEW
DETAIL A

GENERAL NOTES:

All hardware will be galvanized in accordance with ASTM A153.

The steel tubes will meet the requirements of ASTM A500, Grade B, and will be galvanized after fabrication in accordance with the requirements of AASHTO M111.

The anchor bracket, soil plate, and bearing plate will be fabricated from steel that meets ASTM A36 Specifications. They will be galvanized after fabrication in accordance with ASTM A123.

The W Beam End Section (Buffer) will be 12 gage galvanized steel.

The cable will be ¾", Type II, with Class A coating in conformance with AASHTO M30.

September 14, 2019

Published Date: 2nd Qtr. 2021	SDDOT	*W BEAM GUARDRAIL BREAKAWAY CABLE TERMINAL*	*PLATE NUMBER* 630.85 *Sheet 2 of 4*

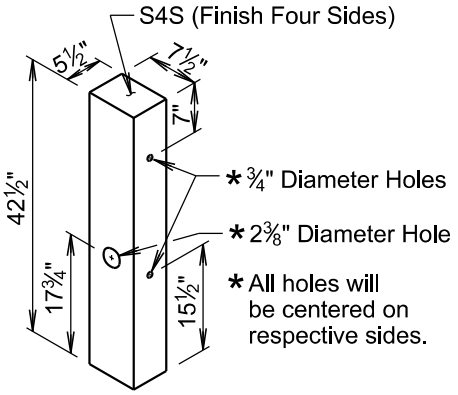

WOOD BREAKAWAY POST

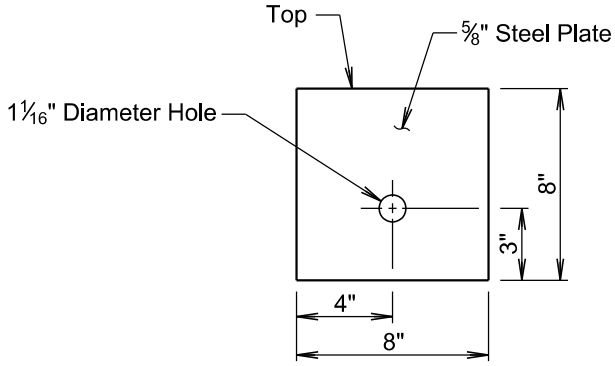

BEARING PLATE

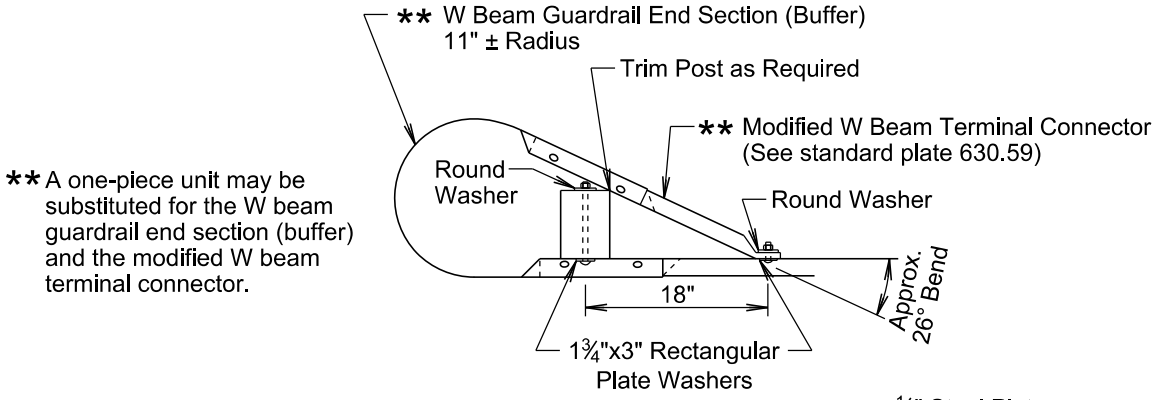

** A one-piece unit may be substituted for the W beam guardrail end section (buffer) and the modified W beam terminal connector.

VIEW B-B

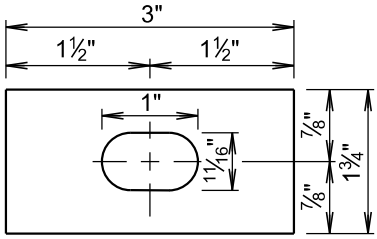

RECTANGULAR PLATE WASHER

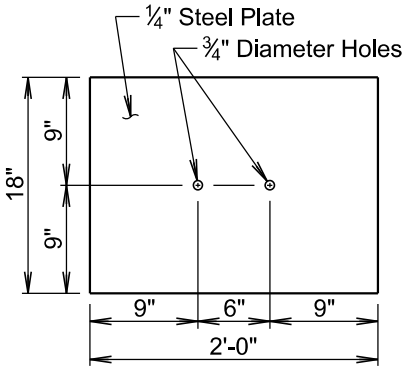

SOIL PLATE

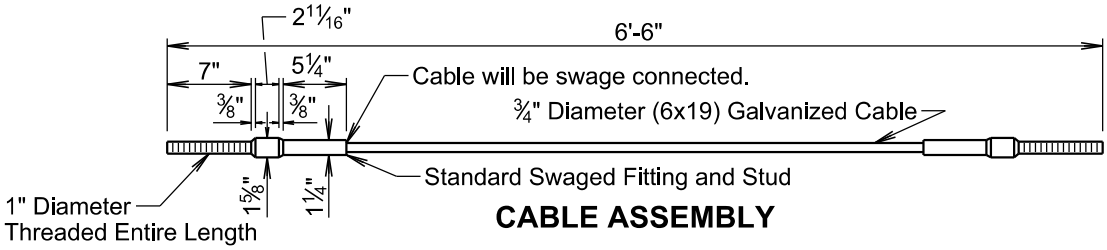

CABLE ASSEMBLY

September 14, 2019

Published Date: 2nd Qtr. 2021	SDDOT	W BEAM GUARDRAIL BREAKAWAY CABLE TERMINAL	PLATE NUMBER 630.85 Sheet 3 of 4

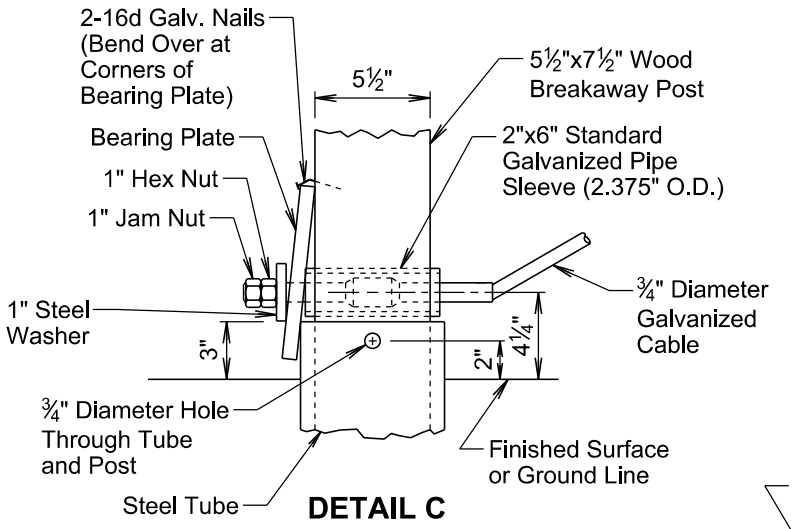

DETAIL C

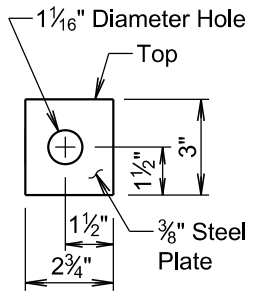

END PLATE FOR ANCHOR BRACKET

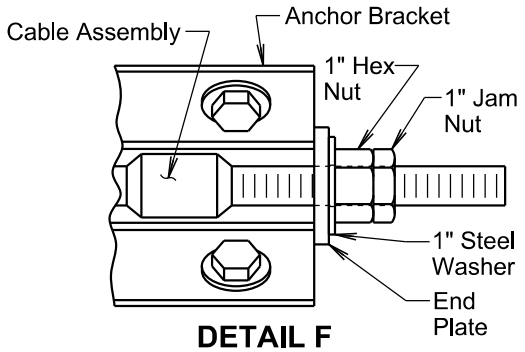

DETAIL F
(W Beam Rail Not Shown)

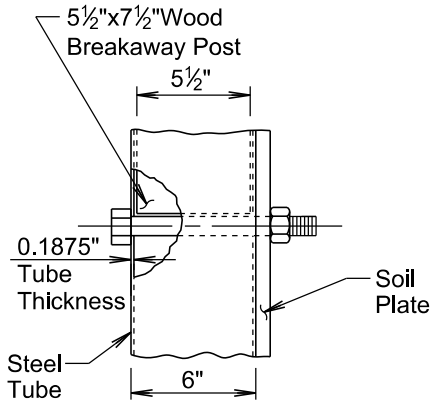

DETAIL D

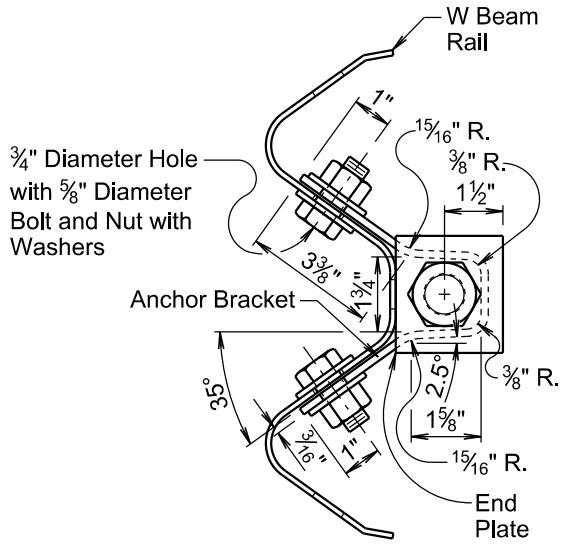

SECTION E-E

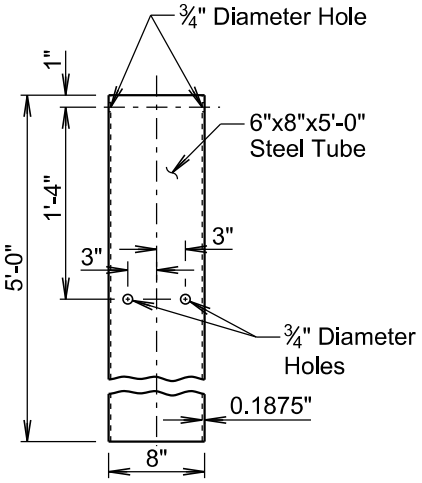

STEEL TUBE

September 14, 2019

Published Date: 2nd Qtr. 2021	SDDOT	**W BEAM GUARDRAIL BREAKAWAY CABLE TERMINAL**	PLATE NUMBER 630.85
			Sheet 4 of 4

GUARDRAIL REPAIR

BEADLE, BROOKINGS, BROWN, BUFFALO, CLARK, CODINGTON, DAY, DEUEL, EDMUNDS, FAULK, GRANT, HAMLIN, HAND, HYDE, KINGSBURY, MCPHERSON, MARSHALL, MOODY, ROBERTS, AND SPINK COUNTIES

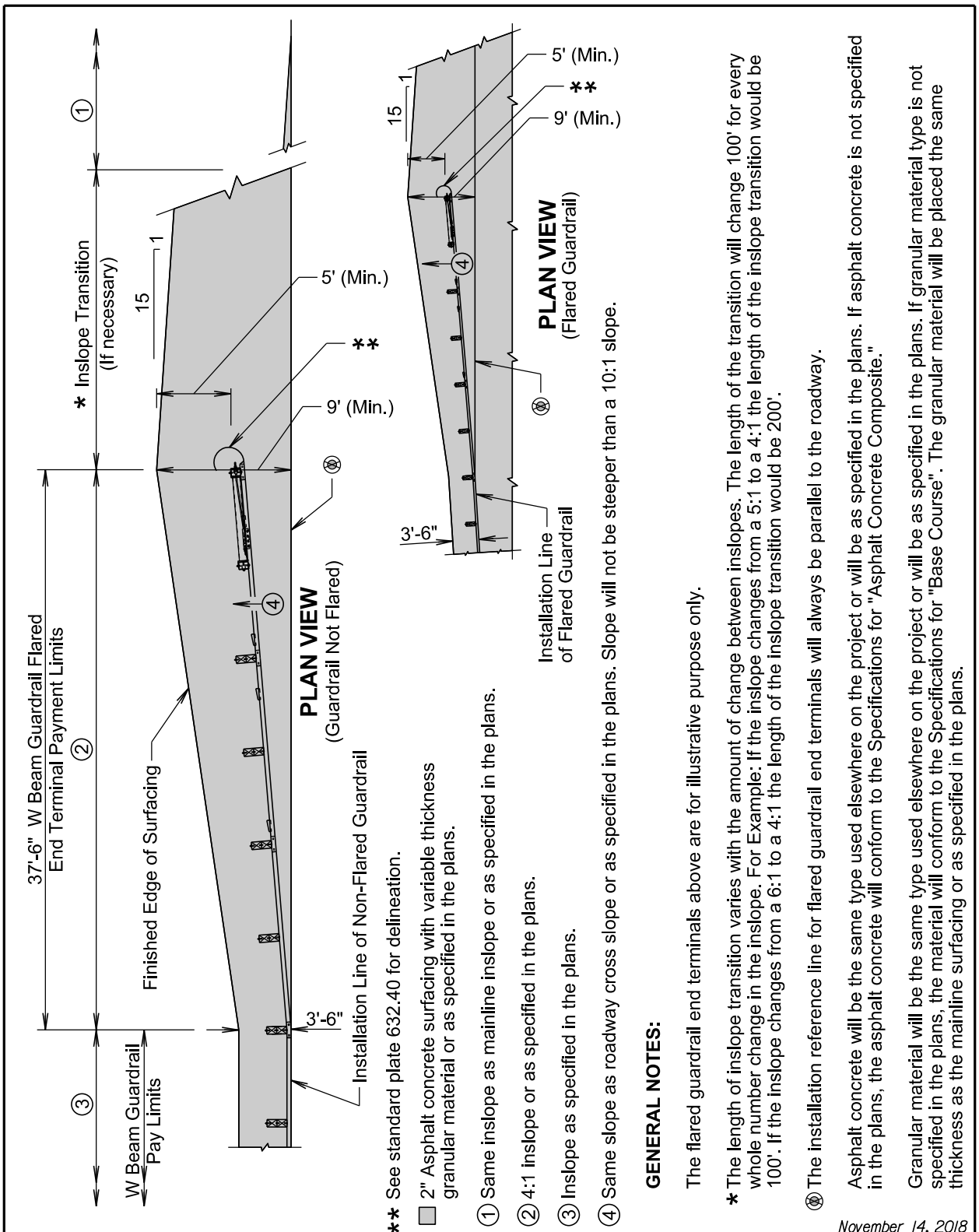

** See standard plate 632.40 for delineation.

2" Asphalt concrete surfacing with variable thickness granular material or as specified in the plans.

① Same inslope as mainline inslope or as specified in the plans.

② 4:1 inslope or as specified in the plans.

③ Inslope as specified in the plans.

④ Same slope as roadway cross slope or as specified in the plans. Slope will not be steeper than a 10:1 slope.

GENERAL NOTES:

The flared guardrail end terminals above are for illustrative purpose only.

* The length of inslope transition varies with the amount of change between inslopes. The length of the transition will change 100' for every whole number change in the inslope. For Example: If the inslope changes from a 5:1 to a 4:1 the length of the inslope transition would be 100'. If the inslope changes from a 6:1 to a 4:1 the length of the inslope transition would be 200'.

⊗ The installation reference line for flared guardrail end terminals will always be parallel to the roadway.

Asphalt concrete will be the same type used elsewhere on the project or will be as specified in the plans. If asphalt concrete is not specified in the plans, the asphalt concrete will conform to the Specifications for "Asphalt Concrete Composite."

Granular material will be the same type used elsewhere on the project or will be as specified in the plans. If granular material type is not specified in the plans, the material will conform to the Specifications for "Base Course". The granular material will be placed the same thickness as the mainline surfacing or as specified in the plans.

November 14, 2018

Published Date: 2nd Qtr. 2021	SDDOT	EMBANKMENT, SURFACING, AND PAYMENT LIMITS FOR W BEAM GUARDRAIL FLARED END TERMINAL	PLATE NUMBER 630.86 Sheet 1 of 1

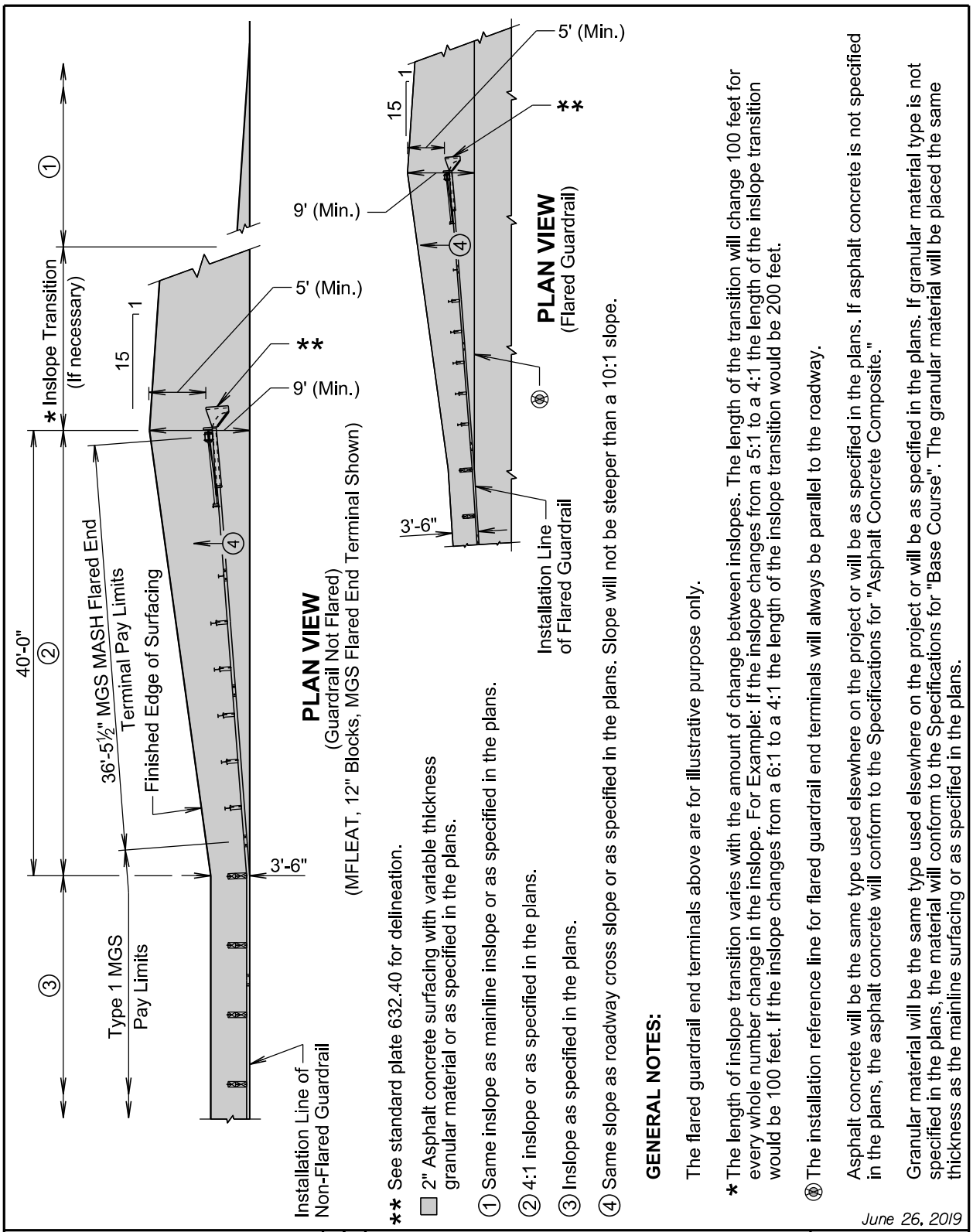

** See standard plate 632.40 for delineation.

▢ 2" Asphalt concrete surfacing with variable thickness granular material or as specified in the plans.

① Same inslope as mainline inslope or as specified in the plans.

② 4:1 inslope or as specified in the plans.

③ Inslope as specified in the plans.

④ Same slope as roadway cross slope or as specified in the plans. Slope will not be steeper than a 10:1 slope.

GENERAL NOTES:

The flared guardrail end terminals above are for illustrative purpose only.

* The length of inslope transition varies with the amount of change between inslopes. The length of the transition will change 100 feet for every whole number change in the inslope. For Example: If the inslope changes from a 5:1 to a 4:1 the length of the inslope transition would be 100 feet. If the inslope changes from a 6:1 to a 4:1 the length of the inslope transition would be 200 feet.

⊗ The installation reference line for flared guardrail end terminals will always be parallel to the roadway.

Asphalt concrete will be the same type used elsewhere on the project or will be as specified in the plans. If asphalt concrete is not specified in the plans, the asphalt concrete will conform to the Specifications for "Asphalt Concrete Composite."

Granular material will be the same type used elsewhere on the project or will be as specified in the plans. If granular material type is not specified in the plans, the material will conform to the Specifications for "Base Course". The granular material will be placed the same thickness as the mainline surfacing or as specified in the plans.

June 26, 2019

Published Date: 2nd Qtr. 2021	SDDOT	EMBANKMENT, SURFACING, AND PAYMENT LIMITS FOR MGS MASH FLARED END TERMINAL	PLATE NUMBER 630.87 Sheet 1 of 1

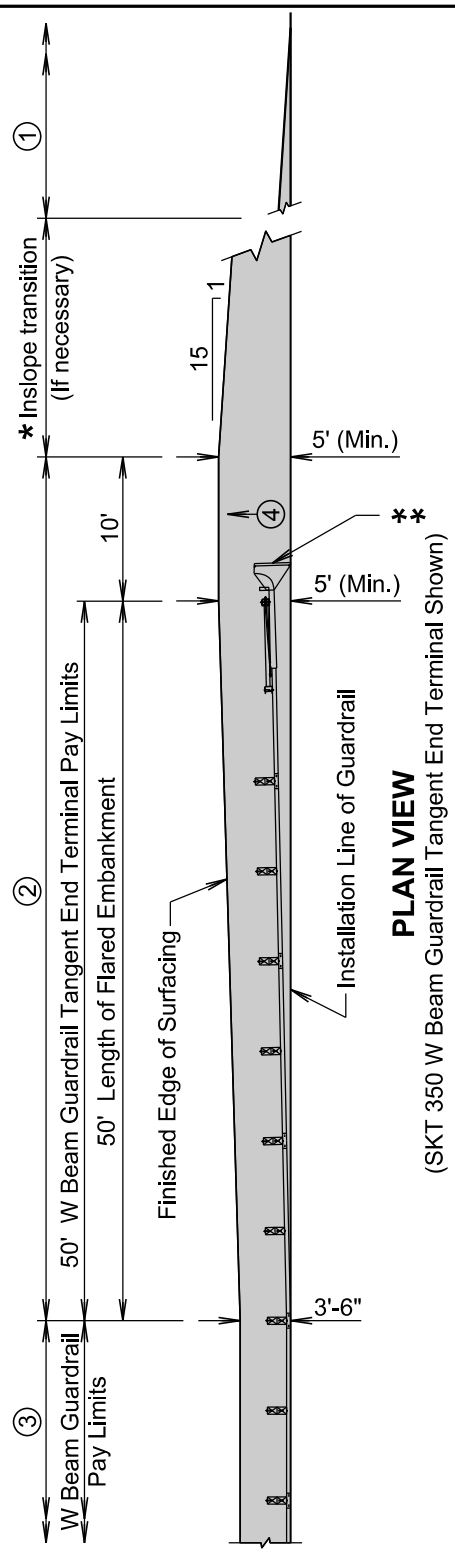

PLAN VIEW

(SKT 350 W Beam Guardrail Tangent End Terminal Shown)

** See standard plate 632.40 for delineation.

▢ 2" Asphalt concrete surfacing with variable thickness granular material or as specified in the plans.

① Same inslope as mainline inslope or as specified in the plans.

② 4:1 inslope or as specified in the plans.

③ Inslope as specified in the plans.

④ Same slope as roadway cross slope or as specified in the plans. Slope will not be steeper than a 10:1 slope.

GENERAL NOTES:

The tangent guardrail end terminal above is for illustrative purpose only.

* The length of inslope transition varies with the amount of change between inslopes. The length of the transition will change 100' for every whole number change in the inslope. For Example: If the inslope changes from a 5:1 to a 4:1 the length of the inslope transition would be 100'. If the inslope changes from a 6:1 to a 4:1 the length of the inslope transition would be 200'.

Asphalt concrete will be the same type used elsewhere on the project or will be as specified in the plans. If asphalt concrete is not specified in the plans, the asphalt concrete will conform to the Specifications for "Asphalt Concrete Composite."

Granular material will be the same type used elsewhere on the project or will be as specified in the plans. If granular material type is not specified in the plans, the material will conform to the Specifications for "Base Course". The granular material will be placed the same thickness as the mainline surfacing or as specified in the plans.

November 14, 2018

Published Date: 2nd Qtr. 2021	SDDOT	EMBANKMENT, SURFACING, AND PAYMENT LIMITS FOR W BEAM GUARDRAIL TANGENT END TERMINAL	PLATE NUMBER 630.88 Sheet 1 of 1

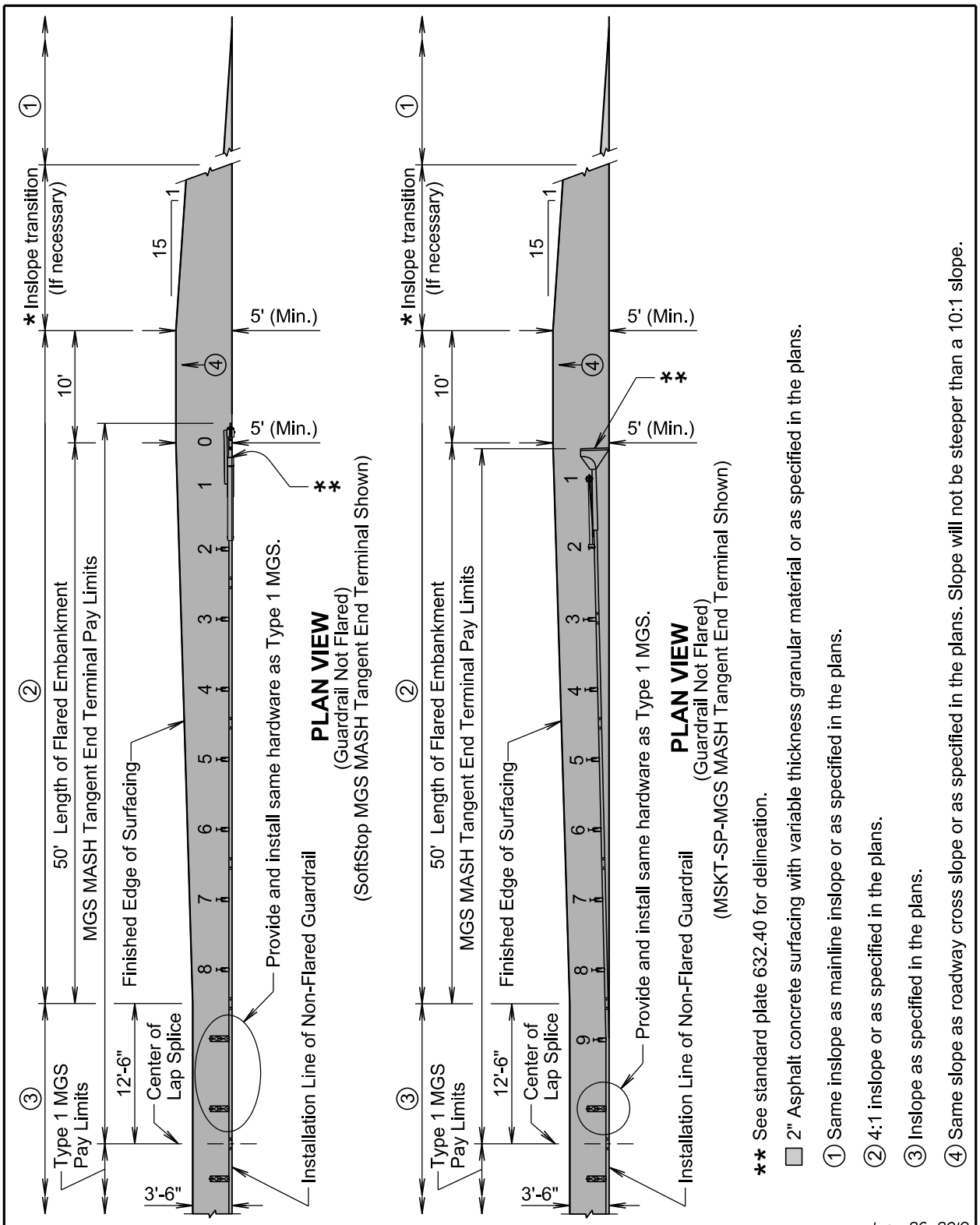

** See standard plate 632.40 for delineation.

2" Asphalt concrete surfacing with variable thickness granular material or as specified in the plans.

① Same inslope as mainline inslope or as specified in the plans.

② 4:1 inslope or as specified in the plans.

③ Inslope as specified in the plans.

④ Same slope as roadway cross slope or as specified in the plans. Slope will not be steeper than a 10:1 slope.

June 26, 2019

Published Date: 2nd Qtr. 2021	SDDOT	EMBANKMENT, SURFACING, AND PAYMENT LIMITS FOR MGS MASH TANGENT END TERMINAL	PLATE NUMBER 630.89 Sheet 1 of 2

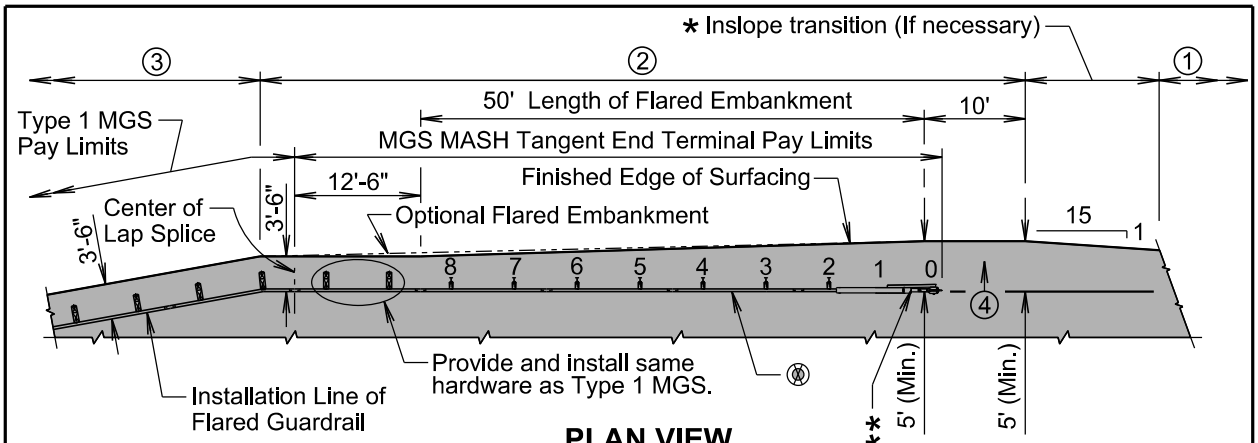

PLAN VIEW
(Guardrail Flared)
(SoftStop MGS MASH Tangent End Terminal Shown)

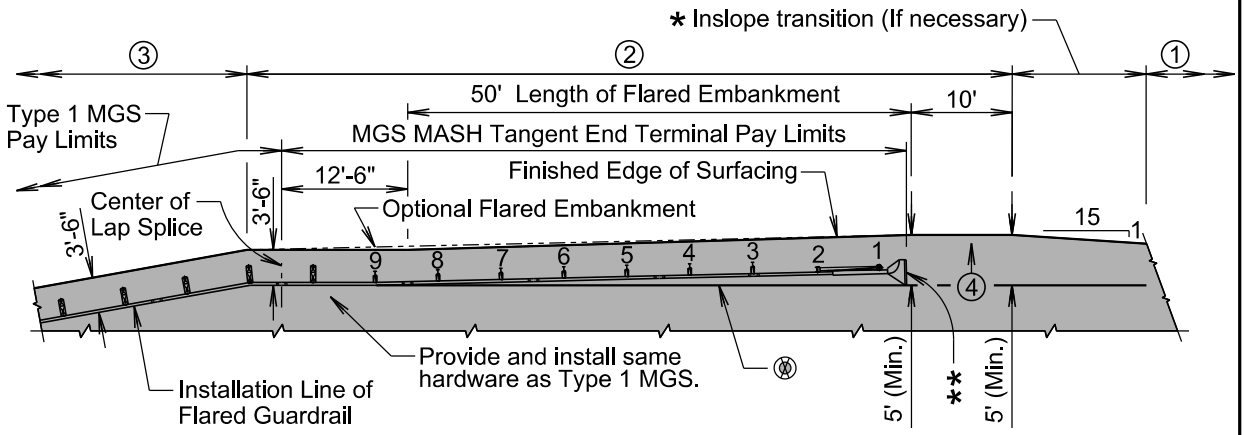

PLAN VIEW
(Guardrail Flared)
(MSKT-SP-MGS MASH Tangent End Terminal Shown)

GENERAL NOTES:

The MGS MASH tangent end terminals above are for illustrative purpose only.

* The length of inslope transition varies with the amount of change between inslopes. The length of the transition will change 100' for every whole number change in the inslope. For Example: If the inslope changes from a 5:1 to a 4:1 the length of the inslope transition would be 100'. If the inslope changes from a 6:1 to a 4:1 the length of the inslope transition would be 200'.

⊗ The installation reference line for MGS MASH tangent end terminals will always be parallel to the roadway.

Asphalt concrete will be the same type used elsewhere on the project or will be as specified in the plans. If asphalt concrete is not specified in the plans, the asphalt concrete will conform to the Specifications for "Asphalt Concrete Composite."

Granular material will be the same type used elsewhere on the project or will be as specified in the plans. If granular material type is not specified in the plans, the material will conform to the Specifications for "Base Course". The granular material will be placed the same thickness as the mainline surfacing or as specified in the plans.

June 26, 2019

Published Date: 2nd Qtr. 2021	SDDOT	*EMBANKMENT, SURFACING, AND PAYMENT LIMITS FOR MGS MASH TANGENT END TERMINAL*	PLATE NUMBER 630.89 Sheet 2 of 2

GUARDRAIL REPAIR

BEADLE, BROOKINGS, BROWN, BUFFALO, CLARK, CODINGTON, DAY, DEUEL, EDMUNDS, FAULK, GRANT, HAMLIN, HAND, HYDE, KINGSBURY, MCPHERSON, MARSHALL, MOODY, ROBERTS, AND SPINK COUNTIES

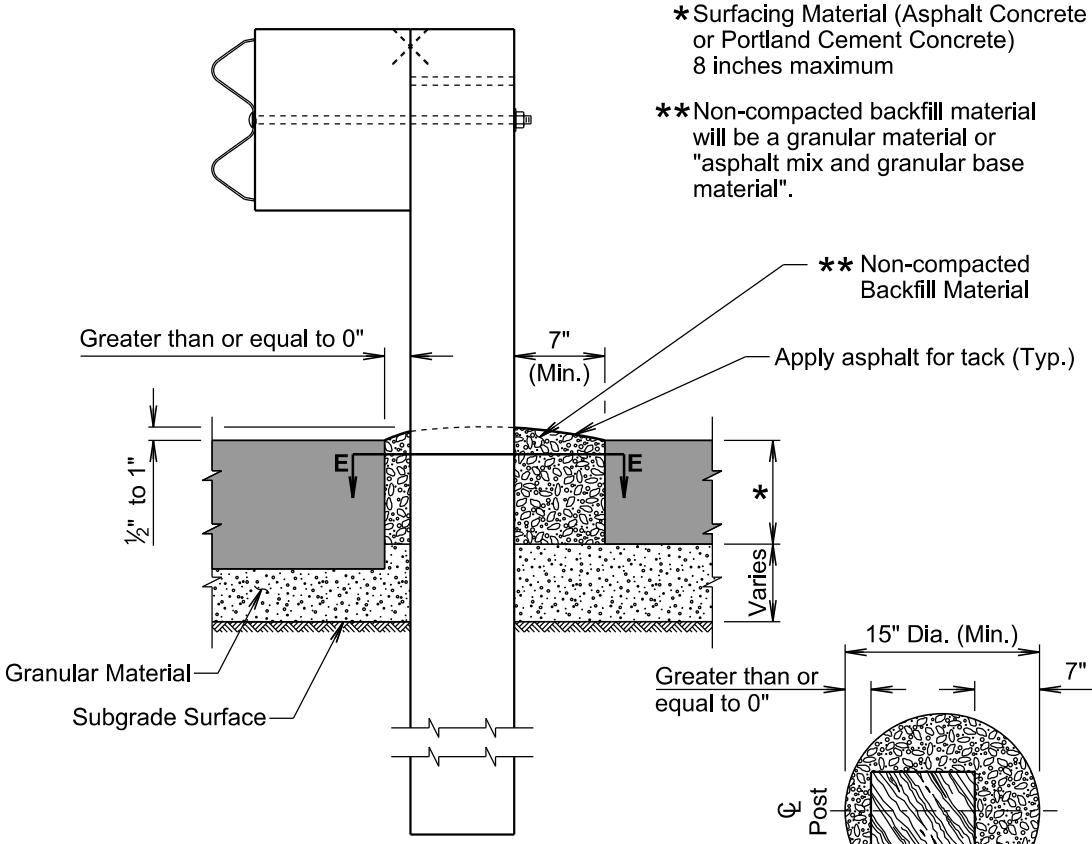

TRANSVERSE SECTION
(Wood post shown for illustrative purpose only)

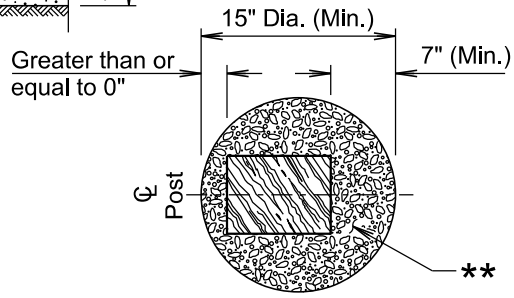

SECTION E-E
(Round option for leave-out and backfill limits)
(Wood post shown for illustrative purpose only)

GENERAL NOTES:

The leave-out limits may be increased to accommodate construction equipment and tolerances.

The backfill material will be mounded ½ inch to 1 inch above the top of the adjacent surfacing as illustrated above.

Asphalt for tack will be applied to the surface of the backfill material at the rate of 0.15 to 0.20 gallons per square yard.

All costs for constructing the leave-out including labor, equipment, and materials which includes the backfill material and tack coat will be incidental to the contract unit price for the respective guardrail contract item.

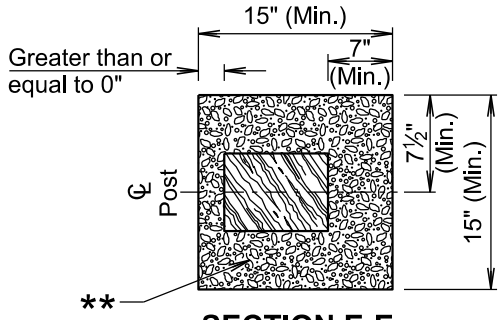

SECTION E-E
(Square option for leave-out and backfill limits)
(Wood post shown for illustrative purpose only)

September 14, 2019

Published Date: 2nd Qtr. 2021	SDDOT	*GUARDRAIL POST INSTALLED IN ASPHALT CONCRETE OR PORTLAND CEMENT CONCRETE*	*PLATE NUMBER* 630.96
			Sheet 1 of 1

GUARDRAIL REPAIR

BEADLE, BROOKINGS, BROWN, BUFFALO, CLARK, CODINGTON, DAY, DEUEL, EDMUNDS, FAULK, GRANT, HAMLIN, HAND, HYDE, KINGSBURY, MCPHERSON, MARSHALL, MOODY, ROBERTS, AND SPINK COUNTIES

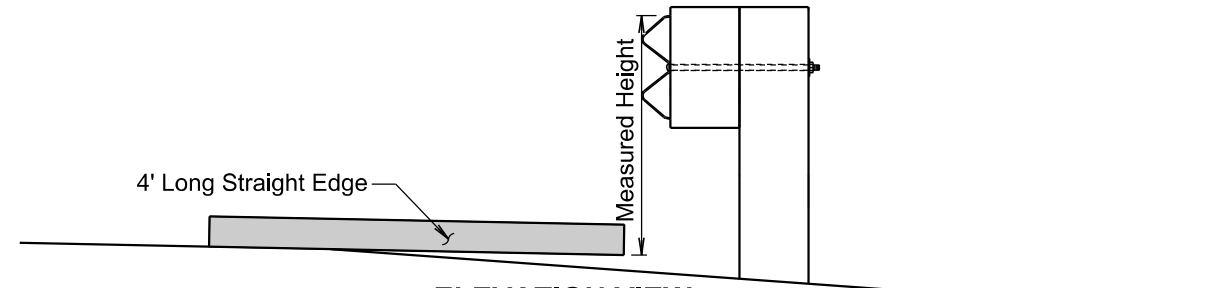

ELEVATION VIEW
(Guardrail Adjacent to Differential Slopes)

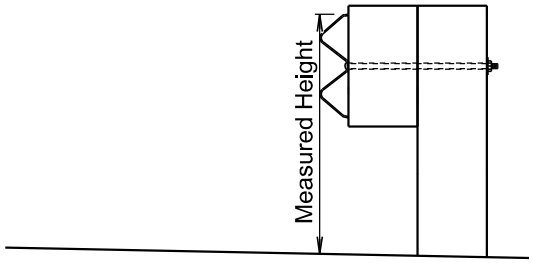

ELEVATION VIEW
(Guardrail on Constant Slope)

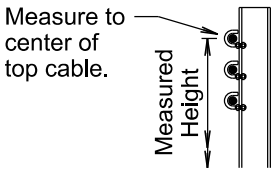

DETAIL A
(3 Cable Guardrail (Low Tension))
(See General Notes for measurement of high tension cable guardrail/barrier)

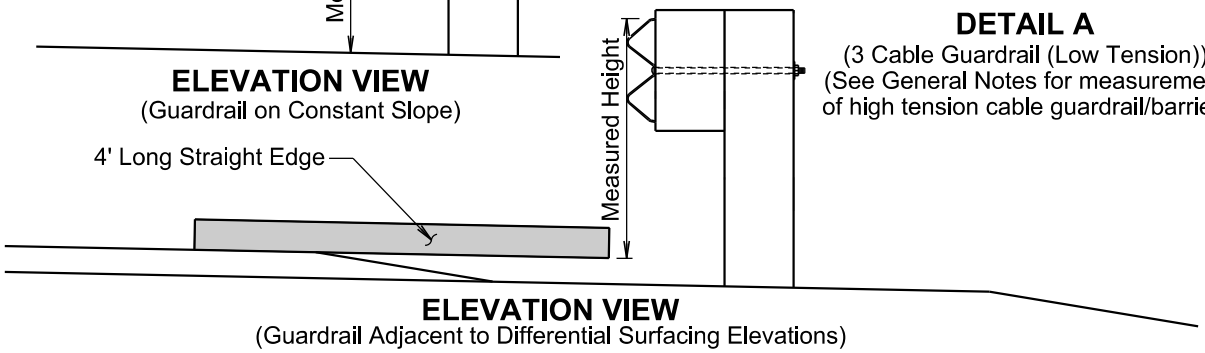

ELEVATION VIEW
(Guardrail Adjacent to Differential Surfacing Elevations)

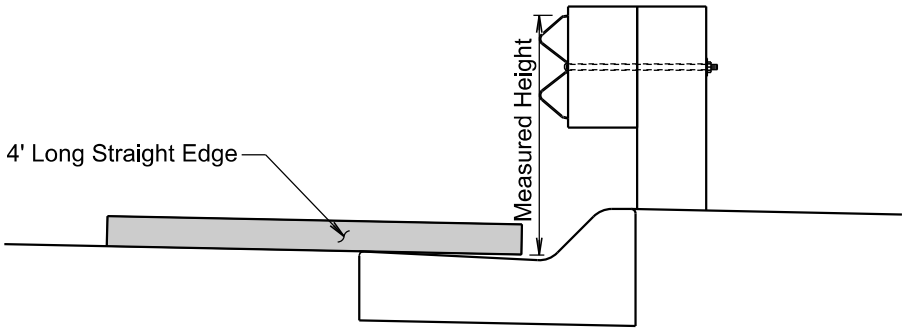

ELEVATION VIEW
(Guardrail at Curb and Gutter)

GENERAL NOTES:

The W Beam guardrail shown is for illustrative purpose. The guardrail height for all types of guardrail systems except for high tension cable guardrail/barrier will be measured in accordance with this standard plate.

When measuring height of 3 cable guardrail (low tension) the height will be measured to the center of the top cable. See Detail A.

The height of high tension cable guardrail/barrier will be measured in accordance with the Manufacturer's installation instructions.

September 14, 2019

Published Date: 2nd Qtr. 2021	SDDOT	*MEASURING GUARDRAIL HEIGHT*	PLATE NUMBER 630.99
			Sheet 1 of 1

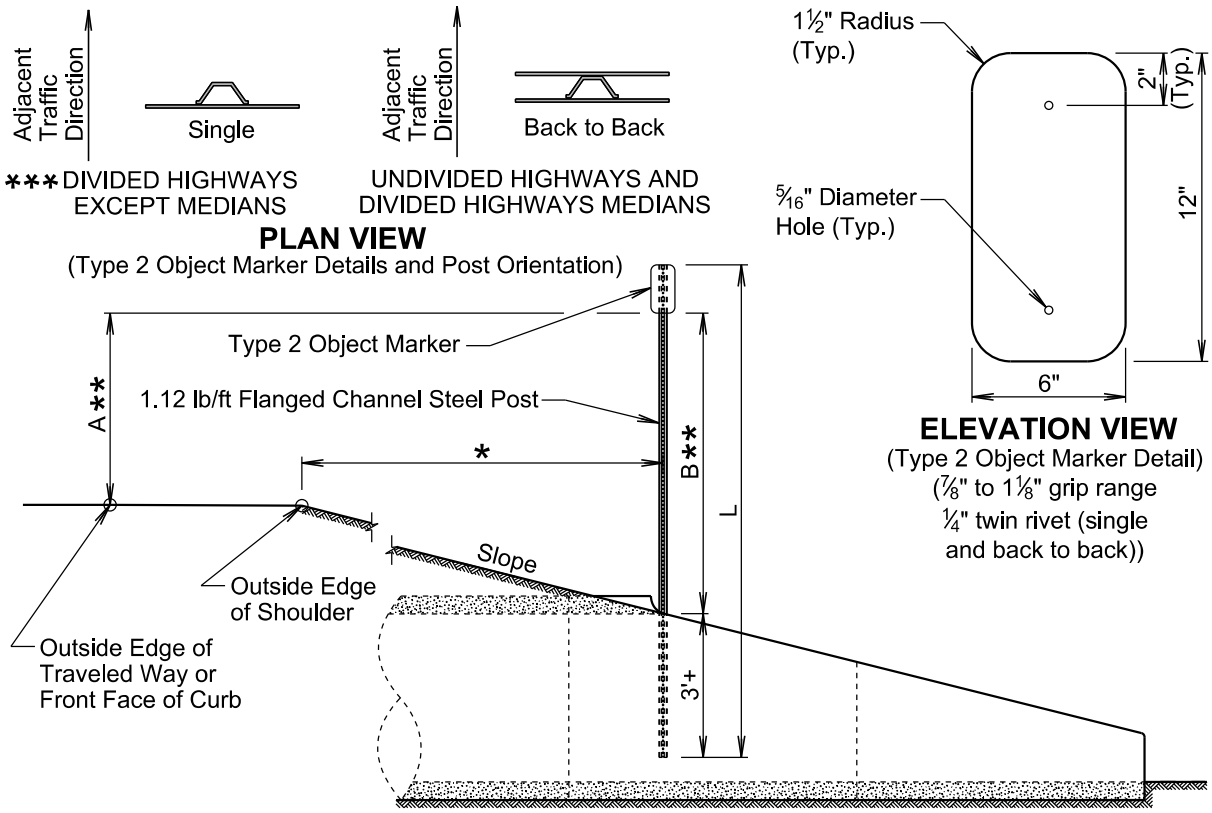

TYPE 2 OBJECT MARKER POST LENGTHS										
OFFSET (*)		1'	2'	3'	4'	5'	6'	7'	8'	Greater Than 8'
		POST LENGTH (L)								
SLOPE	3:1	8'-6"	8'-9"	9'-3"	9'-6"	9'-9"	10'-3"	10'-6"	10'-9"	8'-0"
	4:1	8'-6"	8'-9"	9'-0"	9'-3"	9'-9"	9'-9"	10'-0"	10'-3"	8'-0"
	5:1	8'-3"	8'-6"	8'-9"	9'-0"	9'-3"	9'-3"	9'-6"	9'-9"	8'-0"
	6:1	8'-3"	8'-6"	8'-9"	8'-9"	9'-0"	9'-3"	9'-3"	9'-6"	8'-0"

GENERAL NOTES:

*** The type 2 object marker may be installed back to back when specified in the plans.

Post Length L was calculated based on a shoulder width of 6 feet at a crosslope of 4 percent and L was rounded up to the nearest 3 inches.

** Dimension A is 4 feet when the Offset * is 8 feet and less. Dimension B is 4 feet when Offset * is greater than 8 feet.

The type 2 object marker and the 1.12 lb/ft flanged channel steel post will be in conformance with Specifications Section 982.2 J.

Payment for the type 2 object marker will be in conformance with Specification Section 632.5 B.

December 23, 2019

Published Date: 2nd Qtr. 2021	SDDOT	TYPE 2 OBJECT MARKER (DIRECT DRIVE)	PLATE NUMBER 632.01 Sheet 1 of 1

GUARDRAIL REPAIR

BEADLE, BROOKINGS, BROWN, BUFFALO, CLARK, CODINGTON, DAY, DEUEL, EDMUNDS, FAULK, GRANT, HAMLIN, HAND, HYDE, KINGSBURY, MCPHERSON, MARSHALL, MOODY, ROBERTS, AND SPINK COUNTIES

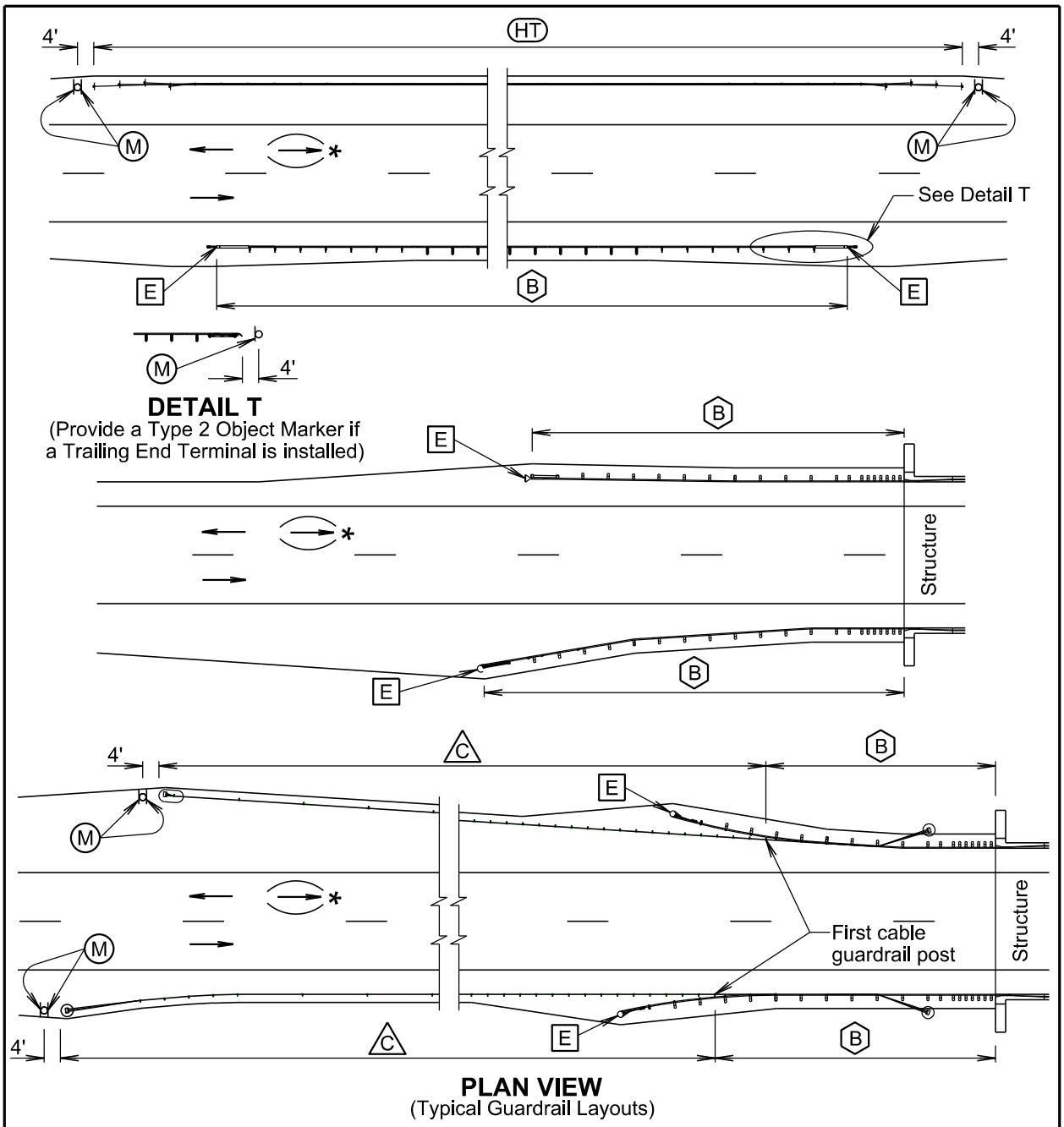

B Steel Beam Guardrail Delineation

E Guardrail End Terminal Object Marker

C 3 Cable Guardrail (Low Tension) Delineation

HT High Tension Cable Guardrail Delineation

M Type 2 Object Marker

* For two-way traffic, install delineation at the opposite end of structure the same as shown. Back-to-back delineation is required for two-way traffic, single-sided delineation for one-way traffic.

December 23, 2019

Published Date: 2nd Qtr. 2021	SDDOT	DELINEATION OF GUARDRAIL	PLATE NUMBER 632.40 Sheet 1 of 4

GUARDRAIL REPAIR

BEADLE, BROOKINGS, BROWN, BUFFALO, CLARK, CODINGTON, DAY, DEUEL, EDMUNDS, FAULK, GRANT, HAMLIN, HAND, HYDE, KINGSBURY, MCPHERSON, MARSHALL, MOODY, ROBERTS, AND SPINK COUNTIES

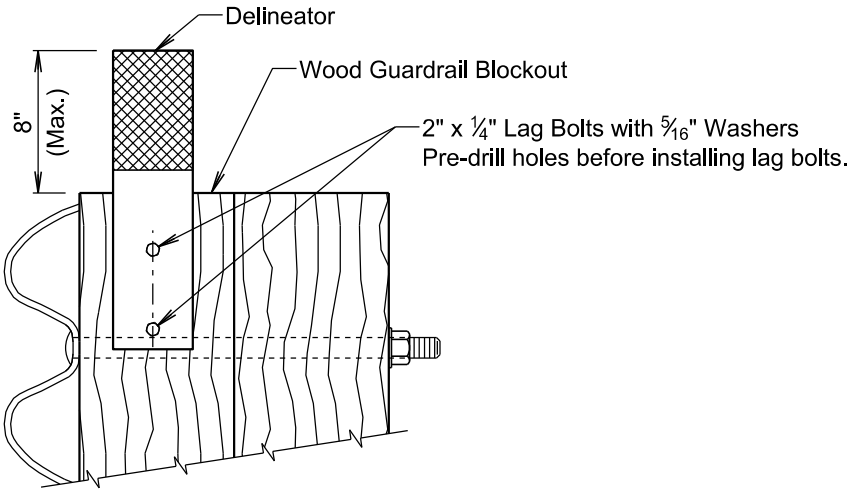

(B) STEEL BEAM GUARDRAIL DELINEATION

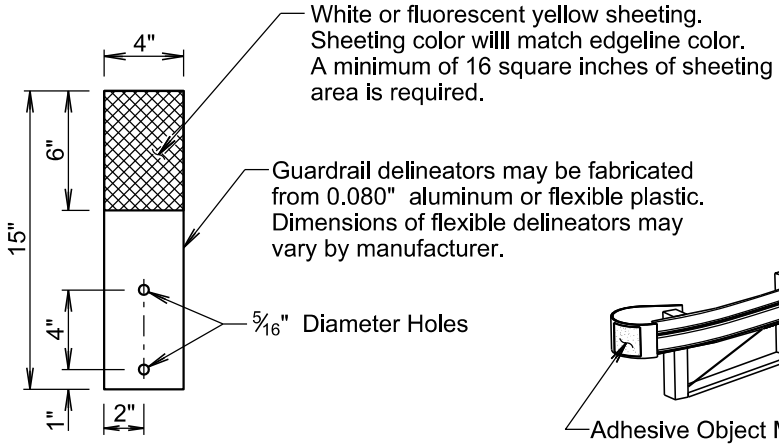

DELINEATOR
(For Steel Beam Guardrail)

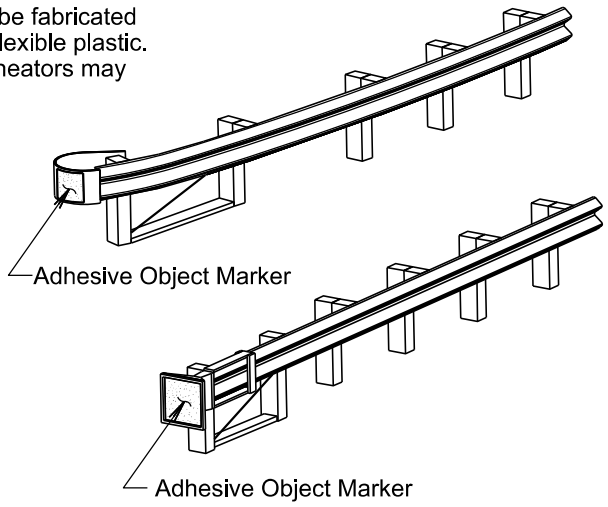

(E) GUARDRAIL END TERMINAL OBJECT MARKER

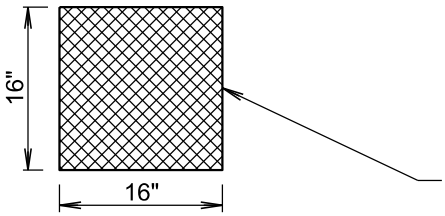

ADHESIVE OBJECT MARKER

Adhesive object marker dimensions may vary due to shape of terminal end. A minimum of 256 square inches of object marker sheeting area is required. The sheeting will be fluorescent yellow.

December 23, 2019

Published Date: 2nd Qtr. 2021	SDDOT	DELINEATION OF GUARDRAIL	PLATE NUMBER 632.40 Sheet 2 of 4

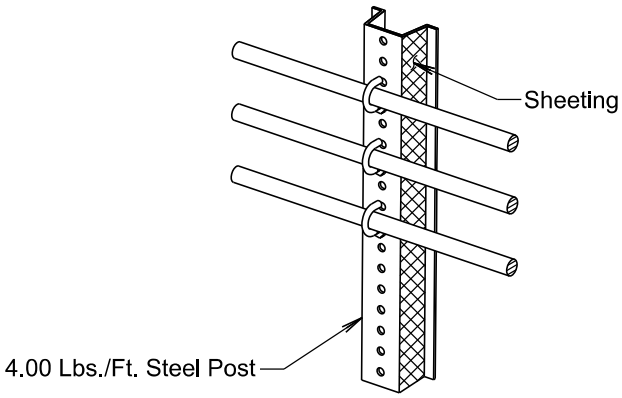

(C) 3 CABLE GUARDRAIL (LOW TENSION) DELINEATION

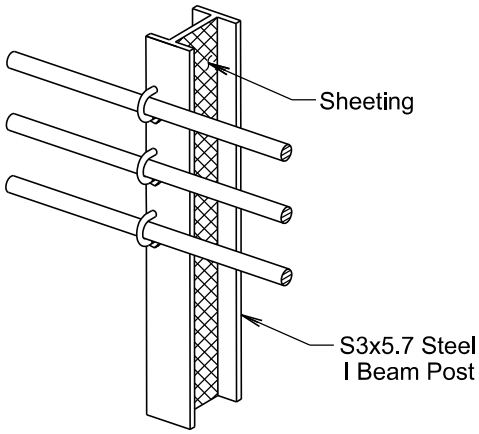

(C) 3 CABLE GUARDRAIL (LOW TENSION) DELINEATION

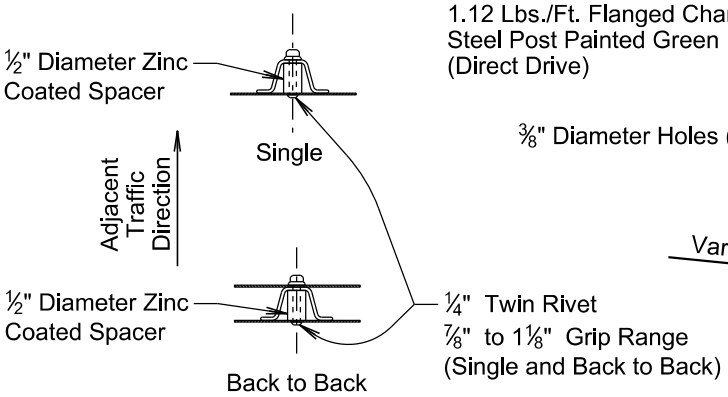

PLAN VIEW
(Type 2 Object Marker Details and Post Orientation)

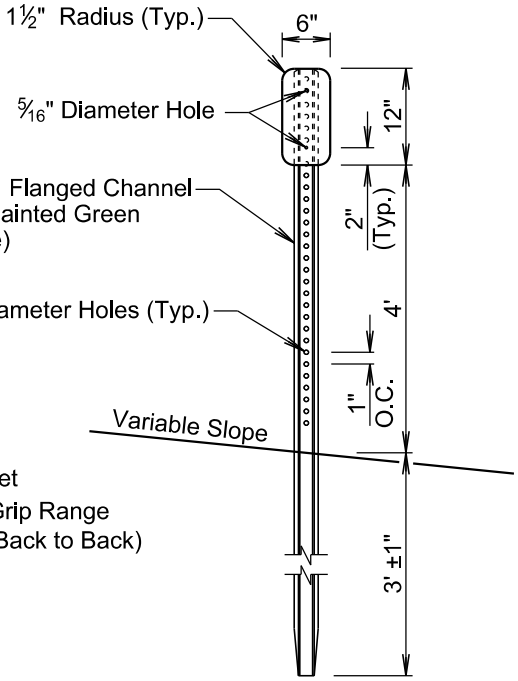

ELEVATION VIEW
(M) (Type 2 Object Marker)
(For Marking 3 Cable Guardrail (Low Tension) Anchor, High Tension Cable Guardrail Anchor, and Trailing End Terminal)

December 23, 2019

Published Date: 2nd Qtr. 2021	SDDOT	*DELINEATION OF GUARDRAIL*	PLATE NUMBER 632.40 Sheet 3 of 4

GENERAL NOTES:

The delineation of high tension cable guardrail will be reflective sheeting placed back to back on every other post cap or cable spacer. The sheeting will be type XI in conformance with ASTM D4956. The color of the reflective sheeting shall be the same as the nearest pavement marking.

The delineators for steel beam guardrail and sheeting on 3 cable guardrail (low tension) posts will be covered with a minimum of 16 square inches of reflective sheeting. The reflective sheeting will be type XI in conformance with ASTM D4956. Along two-way roadways the sheeting will be on both sides of the delineators and guardrail posts and will be white in color. For one-way roadways the sheeting will only be required on the side facing traffic and the color will be the same as the nearest pavement marking, yellow on the left side of the roadway and white on the right side.

When steel beam guardrail is attached to a bridge the first delineator will be attached to the post nearest the bridge.

At bridges with guardrail less than 200 feet in length, a minimum of 4 delineators will be placed in addition to the end terminal yellow object marker. The spacing between the delineators will be approximately one third of the length of the guardrail.

At bridges with guardrail 200 feet and greater in length, including bridges that have steel beam guardrail transitioning to 3 cable guardrail (low tension), the delineators will be placed at a spacing of approximately 50 feet. Delineation will extend throughout the length of the guardrail system.

Steel beam guardrail that is not attached to a bridge and is less than 200 feet in length, a minimum of 4 delineators will be placed in addition to the end terminal yellow object markers. The spacing between the delineators will be approximately one third of the length of the guardrail.

Steel beam guardrail that is not attached to a bridge and is 200 feet and greater in length, including steel beam guardrail transitioning to 3 cable guardrail (low tension), the delineators will be placed at a spacing of approximately 50 feet. Delineation will extend throughout the length of the guardrail system.

All costs for furnishing and installing single or back to back guardrail delineation on 3 cable guardrail and steel beam guardrail will be included in the contract unit price per each for "Guardrail Delineator".

All costs for furnishing and installing the reflective sheeting on the cable spacers or post caps for the high tension cable guardrail will be incidental to the respective high tension cable guardrail contract item.

An adhesive object marker will be placed on the end of the W beam guardrail or MGS end terminal. The adhesive object marker dimensions may vary due to the shape of the terminal end. A minimum of 256 square inches of object marker reflective sheeting area is required. The reflective sheeting will be fluorescent yellow type XI sheeting in conformance with ASTM D4956. All costs for furnishing and installing the adhesive object marker will be incidental to various contract items.

A type 2 object marker will be placed adjacent to the 3 cable guardrail (low tension) anchor, high tension cable guardrail anchor, and trailing end terminal at the location noted on sheet 1 of this standard plate. The type 2 object marker (6" x 12") will have fluorescent yellow type XI sheeting in conformance with ASTM D4956. All costs for furnishing and installing the type 2 object marker including the steel post, 6" x 12" reflective panel, and hardware will be included in the contract unit price per each for "Type 2 Object Marker" for single-sided and "Type 2 Object Marker Back to Back" for back to back type 2 object markers.

December 23, 2019

Published Date: 2nd Qtr. 2021	SDDOT	DELINEATION OF GUARDRAIL	PLATE NUMBER 632.40 Sheet 4 of 4

GUARDRAIL ACCIDENT DAMAGE REPAIR

BEADLE, BROOKINGS, BROWN, BUFFALO, CLARK, CODINGTON, DAY, DEUEL, EDMUNDS, FAULK, GRANT, HAMLIN, HAND, HYDE, KINGSBURY, MCPHERSON, MARSHALL, MOODY, ROBERTS, AND SPINK COUNTIES

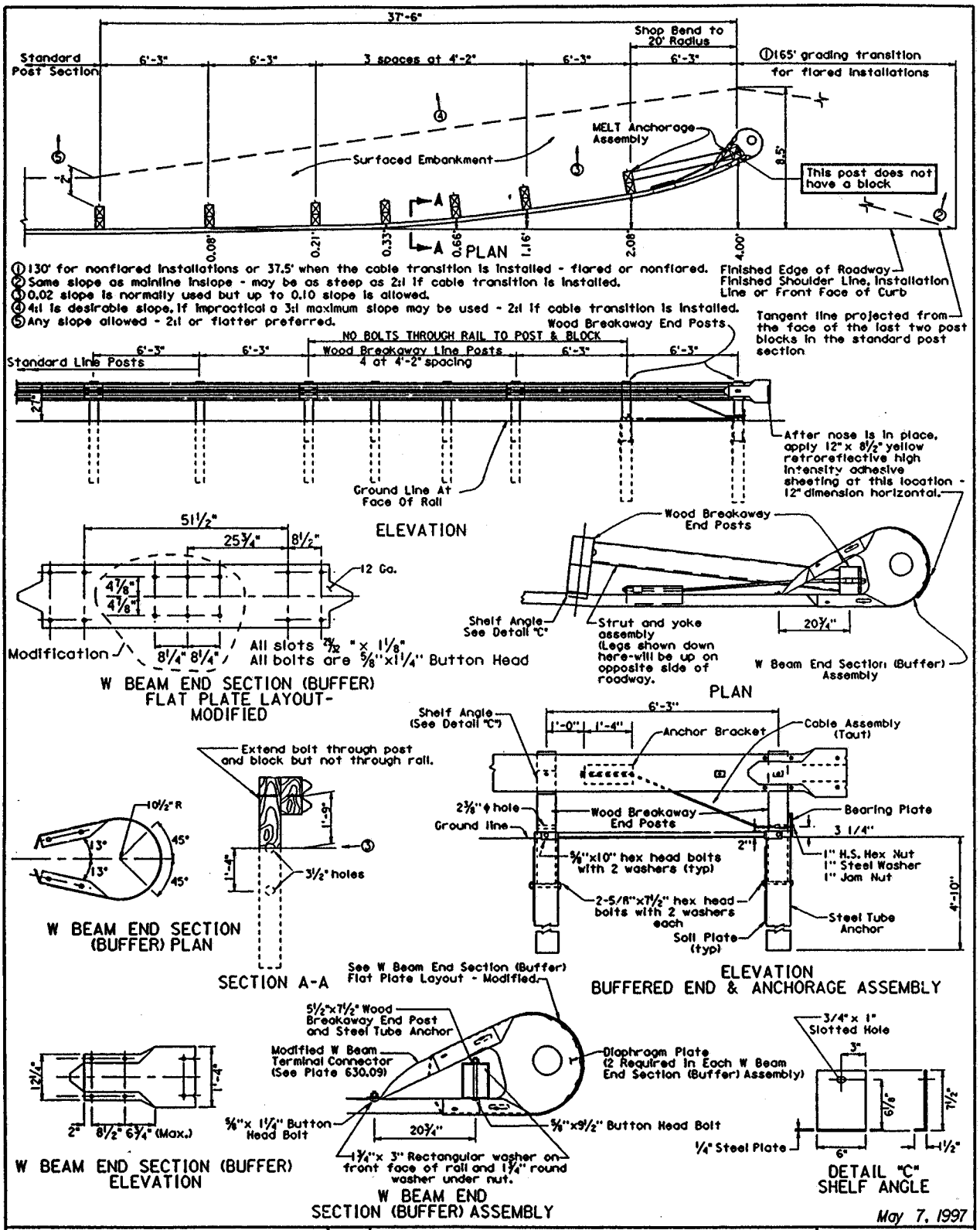

	SDDOT	**W BEAM GUARDRAIL MODIFIED ECCENTRIC LOADER TERMINAL**	PLATE NUMBER **SPECIAL -A** Sheet 1 of 3

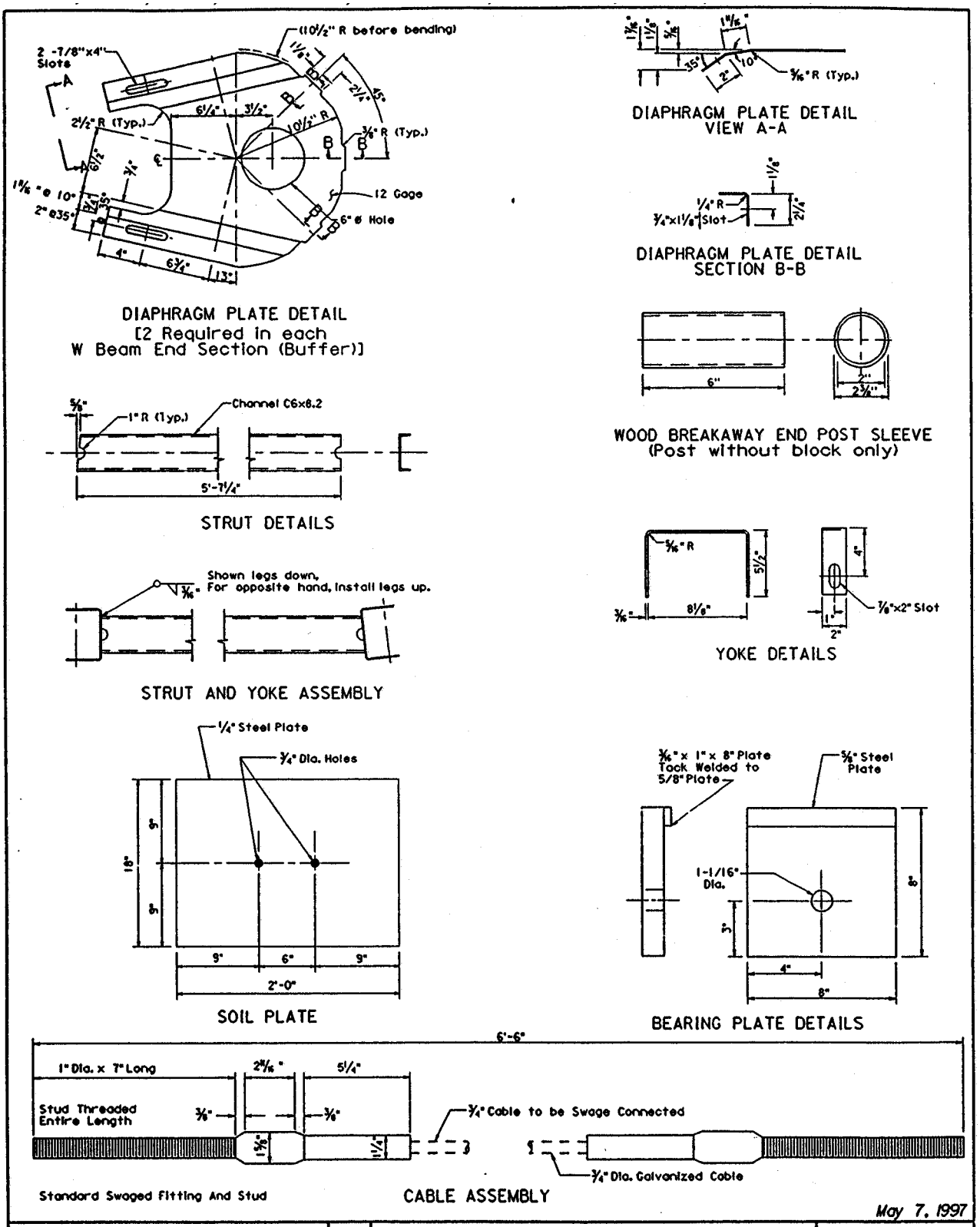
(10½" R before bending)
2 -7/8"x4" Slots
2½" R (Typ.)
6¼"
3½"
10½" R
⅜" R (Typ.)
12 Gage
6" ø Hole
DIAPHRAGM PLATE DETAIL
[2 Required in each W Beam End Section (Buffer)]
DIAPHRAGM PLATE DETAIL
VIEW A-A
⅜" R (Typ.)
DIAPHRAGM PLATE DETAIL
SECTION B-B
¼" R
¾"x1⅛" Slot
WOOD BREAKAWAY END POST SLEEVE
(Post without block only)
Channel C6x8.2
1" R (Typ.)
5'-7¼"
STRUT DETAILS
Shown legs down.
For opposite hand, install legs up.
STRUT AND YOKE ASSEMBLY
⅜" R
8⅛"
⅞"x2" Slot
YOKE DETAILS
¼" Steel Plate
¾" Dia. Holes
2'-0"
SOIL PLATE
⅜" x 1" x 8" Plate Tack Welded to 5/8" Plate
⅝" Steel Plate
1-1/16" Dia.
BEARING PLATE DETAILS
6'-6"
1" Dia. x 7" Long
Stud Threaded Entire Length
5¼"
¾" Cable to be Swage Connected
¾" Dia. Galvanized Cable
Standard Swaged Fitting And Stud
CABLE ASSEMBLY
May 7, 1997
SDDOT
W BEAM GUARDRAIL MODIFIED
ECCENTRIC LOADER TERMINAL
PLATE NUMBER
SPECIAL -A
Sheet 2 of 3

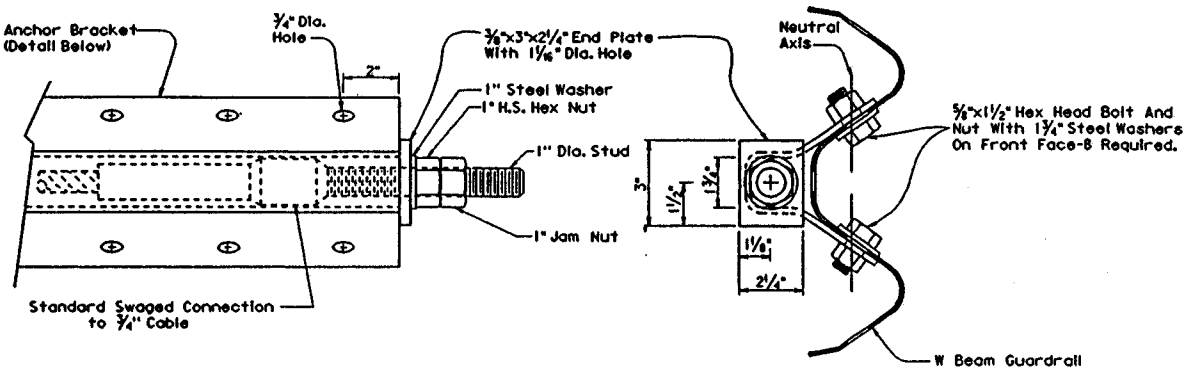

ANCHOR BRACKET ASSEMBLY DETAILS

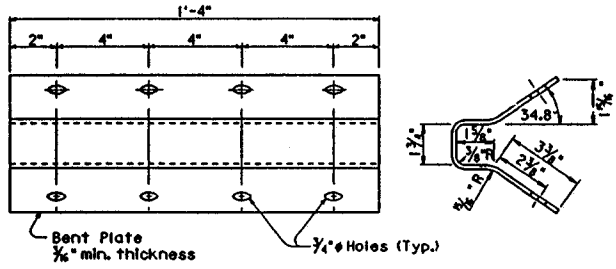

ANCHOR BRACKET

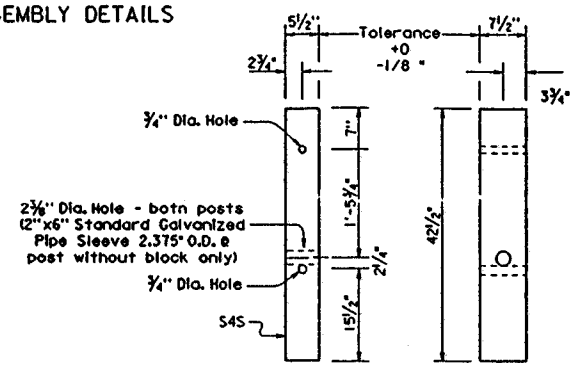

WOOD BREAKAWAY END POST

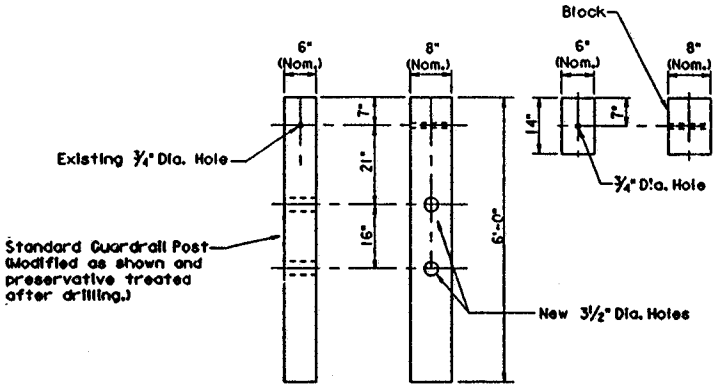

WOOD BREAKAWAY LINE POST AND BLOCK

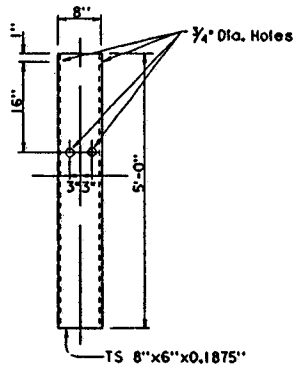

STEEL TUBE ANCHOR

GENERAL NOTES:

1. All angles, channels, and plates shall conform to the requirements of A.S.T.M. A36 and structural tubing to A.S.T.M. A500 or A.S.T.M. A513, Grade 1008. Diaphragm plate shall conform to A.S.T.M. A36 or AASHTO M180. Welding shall meet the current requirements of the American Welding Society Structural Welding Code ANSI/AASHTO/AWS D1.5. All structural steel shall be galvanized in accordance with A.S.T.M. A123. No punching, cutting, or drilling will be permitted after galvanizing. All hardware shall be galvanized according to ASTM A153.

2. The two (2) Wood Breakaway End Posts shall be made of S4S timber with a stress grade of 1200 psi and shall be grademarked or certified by a recognized association or agency which is certified by the Board of Review, American Lumber Standards Committee, to grade the species. They shall receive a preservative treatment in accordance with AASHTO designation M133.

3. The post offset dimensions are given to the center of the traffic face of the blockouts, except at the first post, where the dimension is to the center of the traffic face of the post. Offset points are to be located by chord measurements at the back of rail equal to the nominal post spacings shown. Posts are to be set approximately radial to the railing at each post location.

4. The contract unit price per each for W BEAM GUARDRAIL MODIFIED ECCENTRIC LOADER TERMINAL is to include the anchor bracket, cable assembly, steel tube anchors with soil plates, bearing plate, wood breakaway end post sleeve, modified W beam terminal connector, diaphragm plates, strut, W beam end section, retroreflective adhesive sheeting, shelf angle and all hardware and labor to attach the above to the W beam guardrail. The wood breakaway end posts, wood breakaway line posts, the cost of shop bending the last half of the end section containing the anchor bracket to a 20' radius, and the guardrail will be paid for at the contract unit price per linear foot for W BEAM GUARDRAIL STRAIGHT, CLASS A, WOOD POSTS.

May 7, 1997

	SDDOT	**W BEAM GUARDRAIL MODIFIED ECCENTRIC LOADER TERMINAL**	PLATE NUMBER **SPECIAL -A**
			Sheet 3 of 3